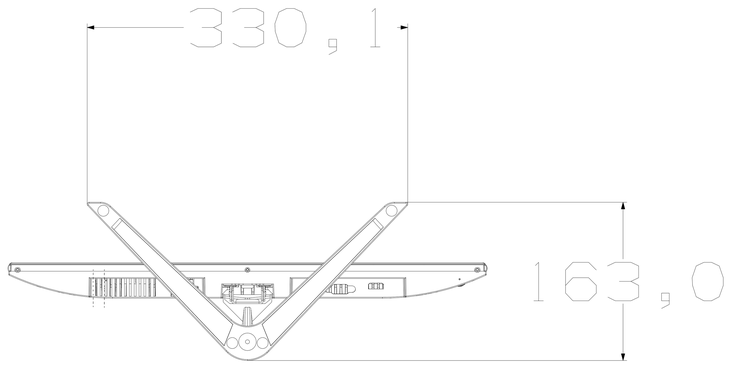

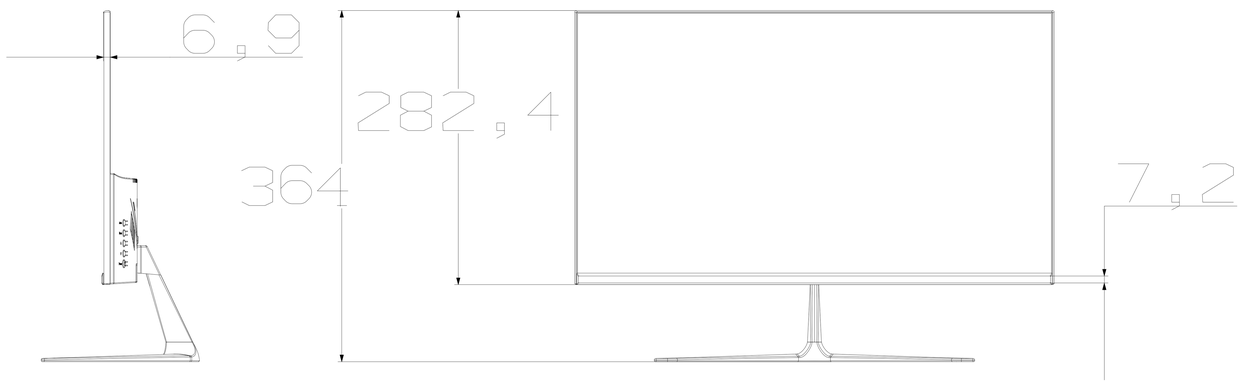

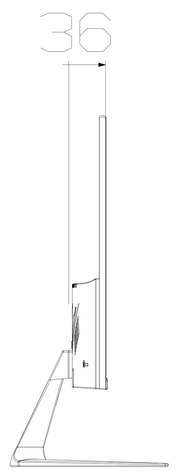

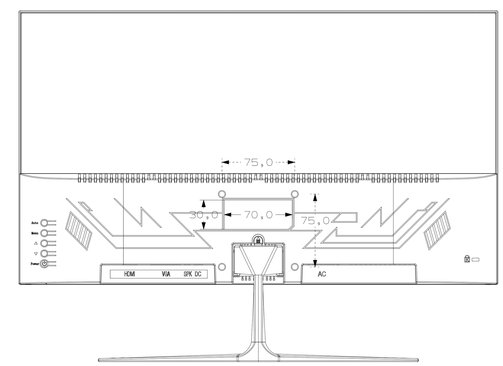

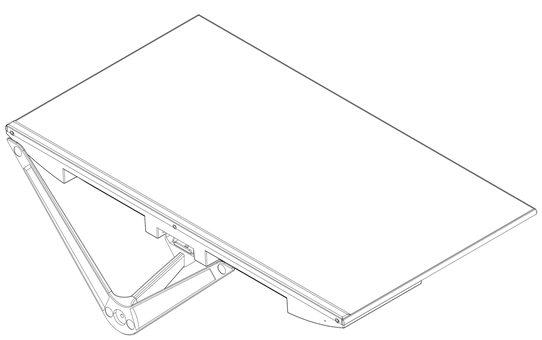

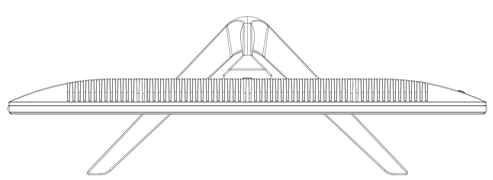

JN-V215DF

JAPANNEXT