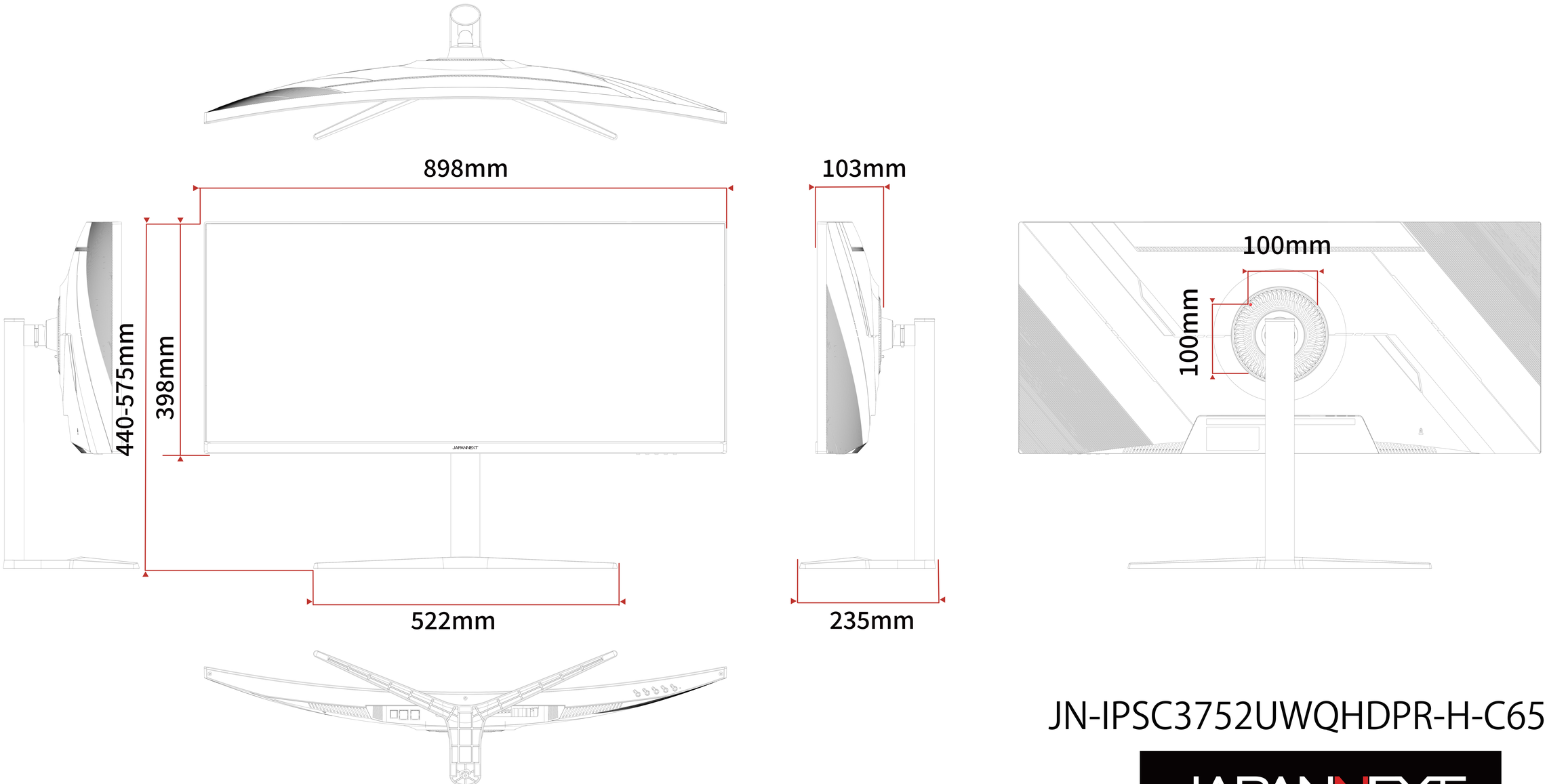

JN-IPSC3752UWQHDPR-H-C65W

JAPANNEXT