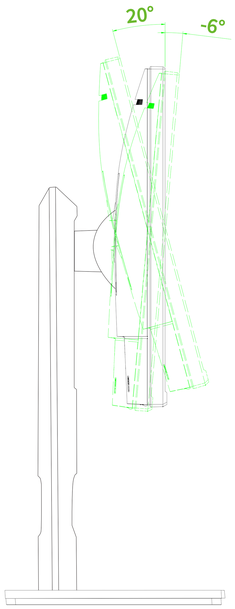

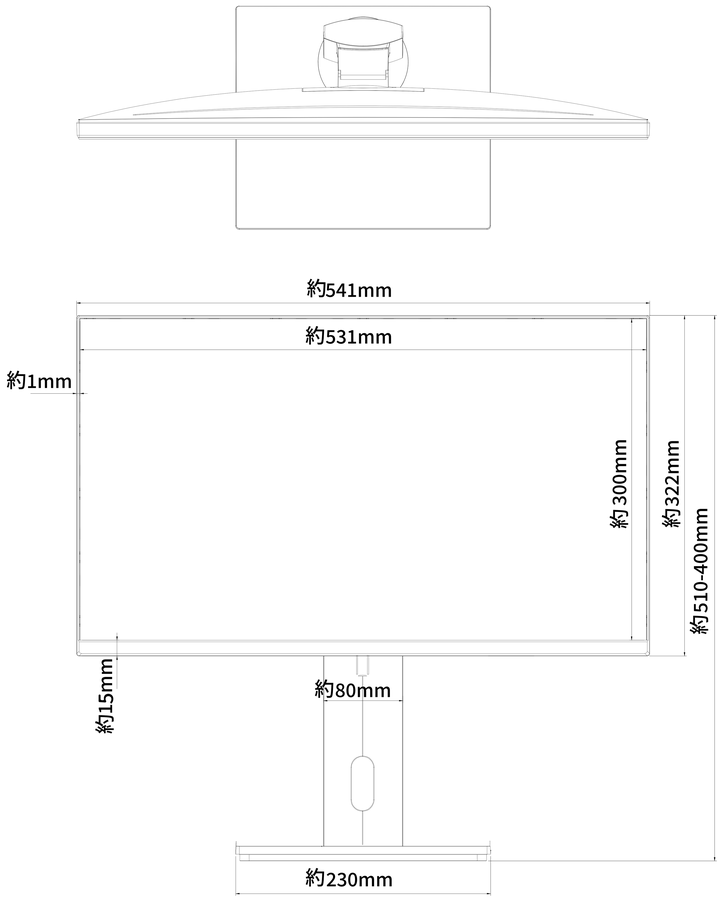

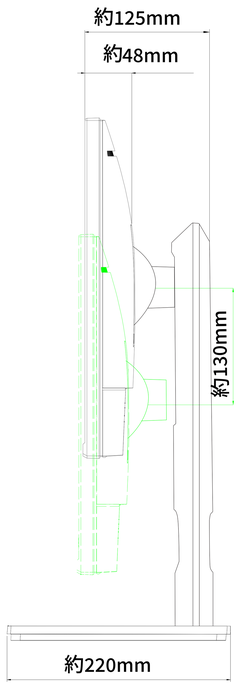

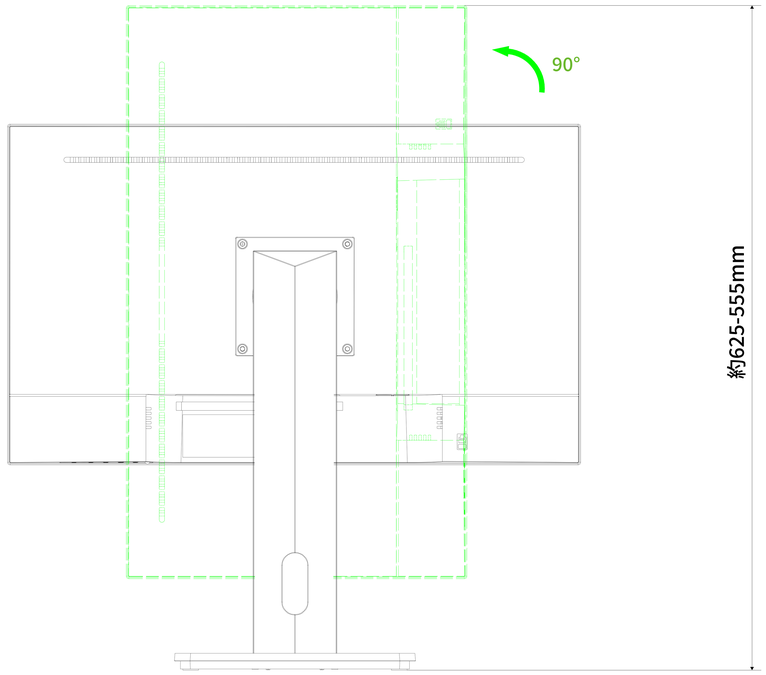

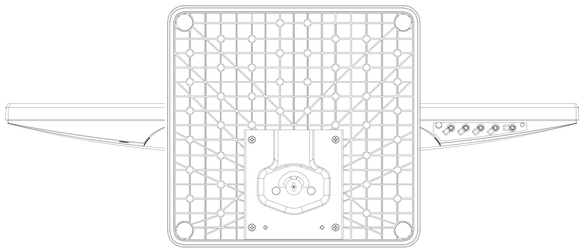

JN-HSP238IPSFHD

JAPANNEXT