# Universal

## Trundle Long Tidy bed

通用泰迪加长抽屉床

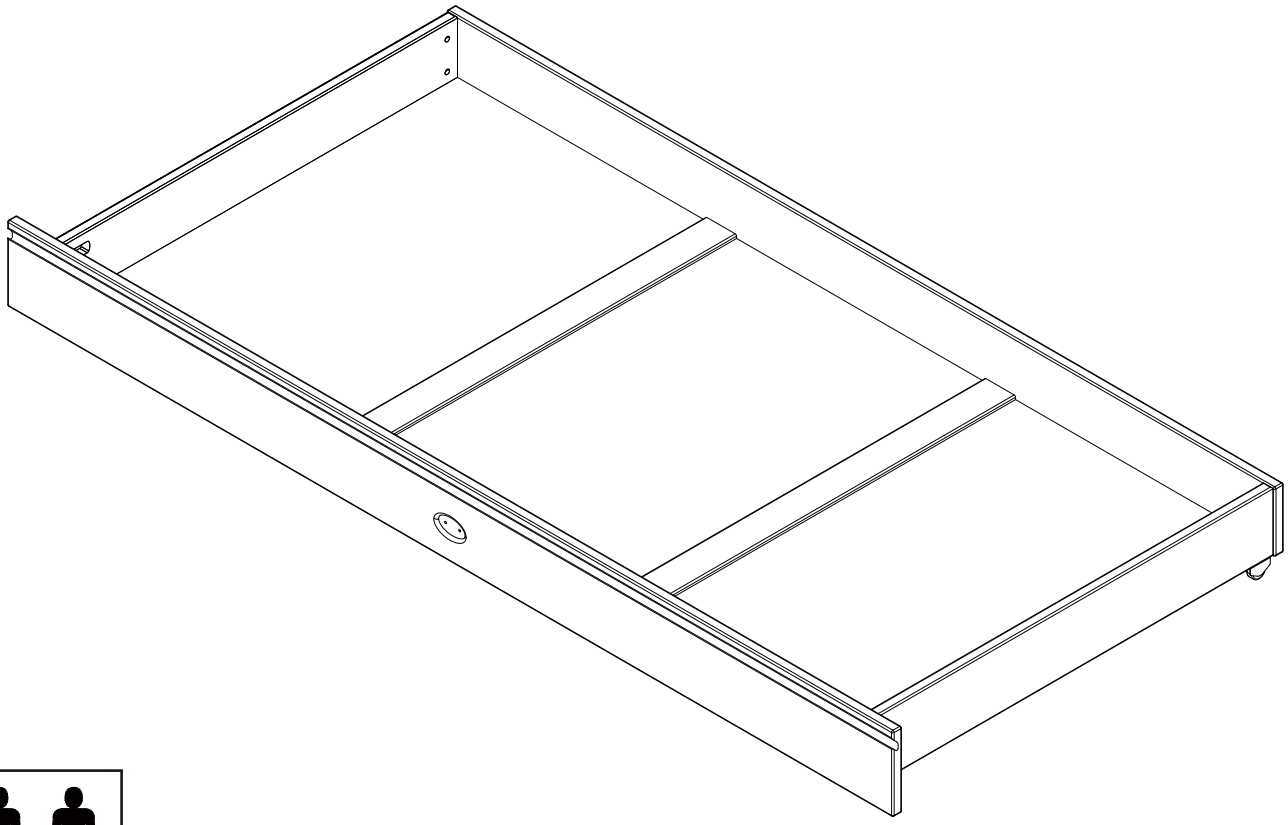

IMPORTANT:
PLEASE READ THE INSTRUCTIONS CAREFULLY AND KEEP FOR FUTURE REFERENCE

重要：请仔细阅读此说明书，并妥善保管以便日后参考。

BK-TRLTB

**Boori Australia Pty Ltd**
18-20 Charles Street
St. Marys Sydney NSW
2760 Australia
Tel: + 61 2 9833 3769
Fax: + 61 2 9673 4240
www.boori.com.au

**Boori (Europe) Ltd**
Unit 1 Riverside House,
Mill Lane, Newbury,
Berkshire, RG 14 5QS UK
Tel: + 44 016 3529 5670
Fax: + 44 016 3587 7552
www.boori.co.uk

**Halim & Boori Company**
10F. Halim INT'L B/D, #1674-4,
Seocho-Dong, Seocho-Gu,
Seoul, Korea
Tel: + 82 2598 1470
Fax: + 82 2583 8885
E-mail : ted@boori.co.kr
Postal code: 137-725.

ブーリジャパン株式会社
〒141-0031
東京都品川区西五反田
7-22-17 TOCビル5F
TEL:03-6420-0024
EMAIL:info@boori.co.jp
HP:www.boori.jp

**博瑞儿童用品（上海）有限公司**
上海市青浦区徐泾镇华徐公路577号
VEG微格创意园A8-10室
邮编：201702
电话：+ 86 21 5296 6600
传真：+ 86 21 5296 6636
网址：www.boori.com.cn

# Universal Trundle Long Tidy bed

**Dimensions**（**External**/外径）:2000mm*948mm*188mm
产品规格 （**Internal** /内径）:1820mm*906mm

**Main Materials：European Beech**
主要材质：欧洲山毛榉

## Hardware /五金单

| A x 1 | B x 6 | C x 12 |
|---|---|---|
| | 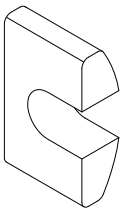 | |
| M4*140*20mm | 20*12*6mm | ø6*47mm |

## Parts List /部件清单

**Note: Use only spare parts approved by the manufacturer.**
注意：仅限使用制造商提供的产品零配件及五金。

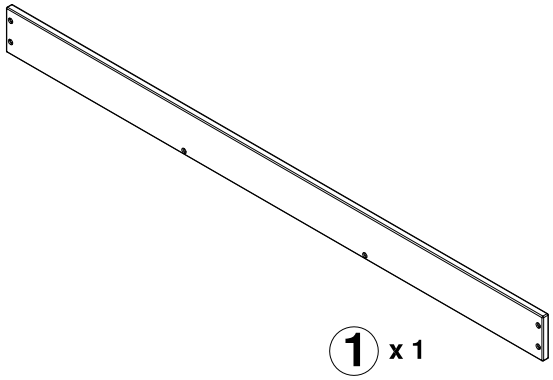

1 x 1

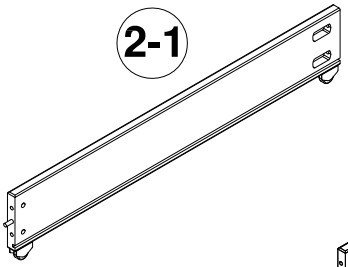

2-1

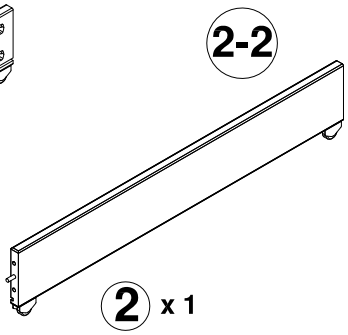

2-2

2 x 1

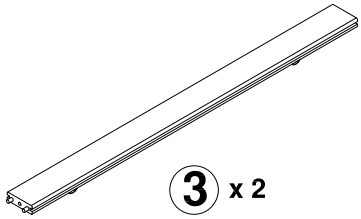

3 x 2

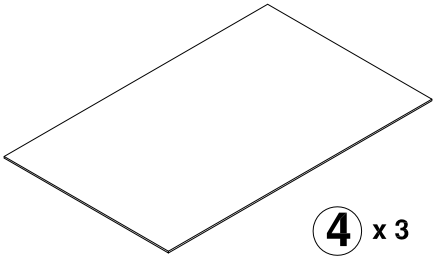

4 x 3

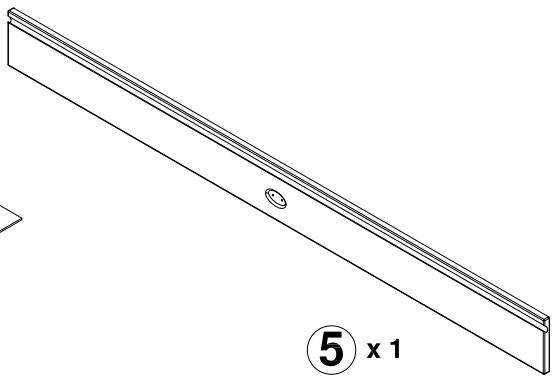

5 x 1

# Assembly / 安装说明

## 1

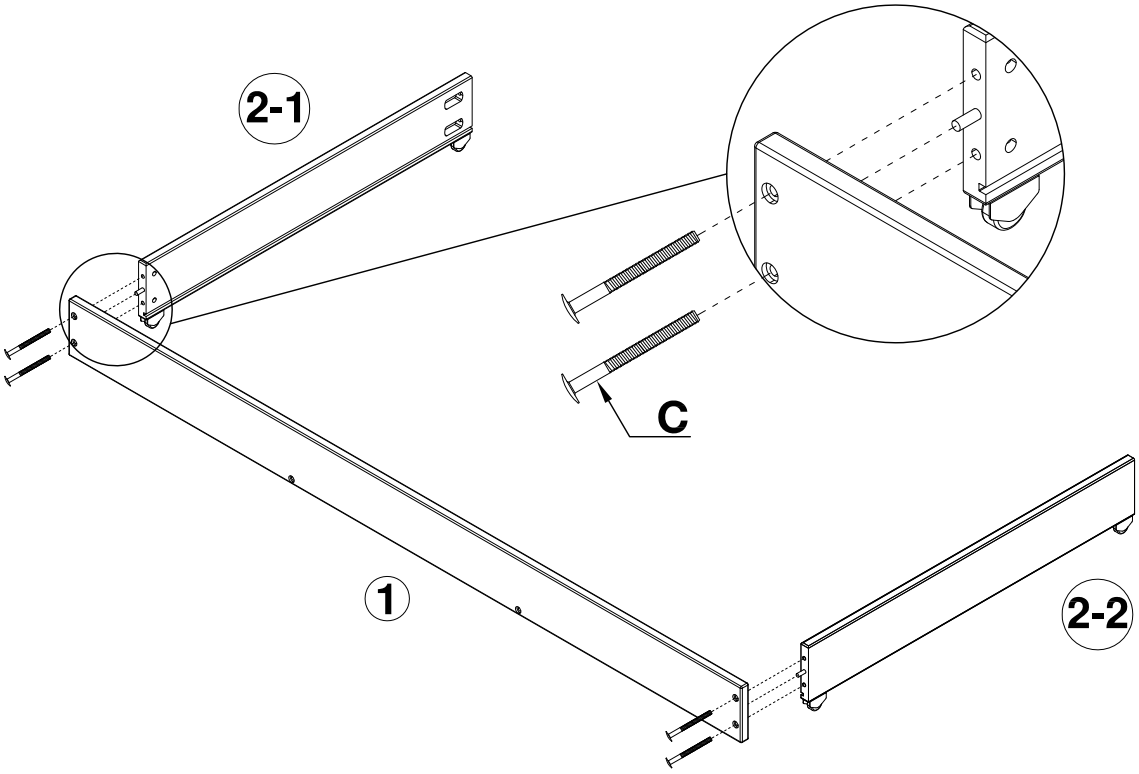

Cx4

## 2

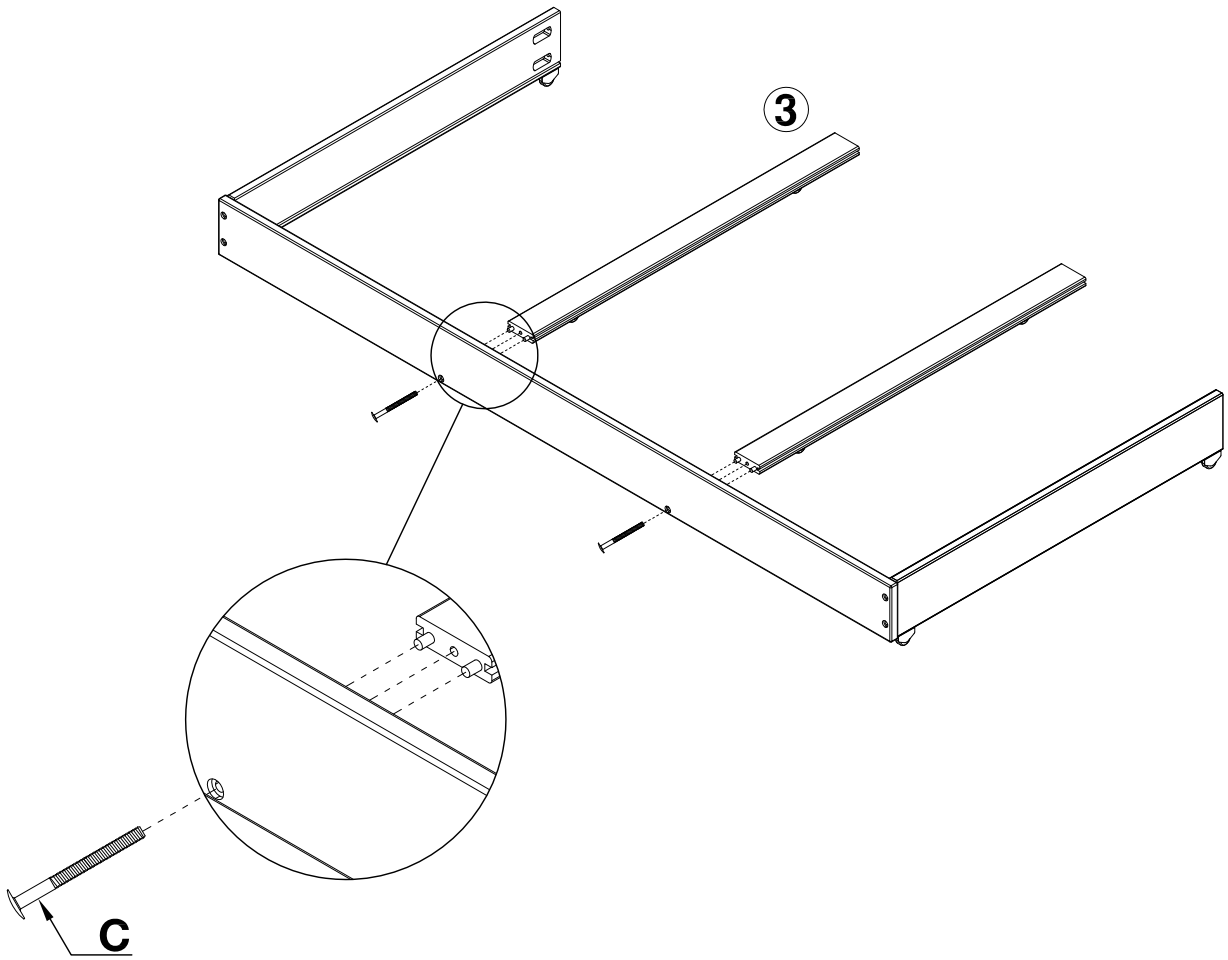

Cx2

# Assembly / 安装说明

## 3

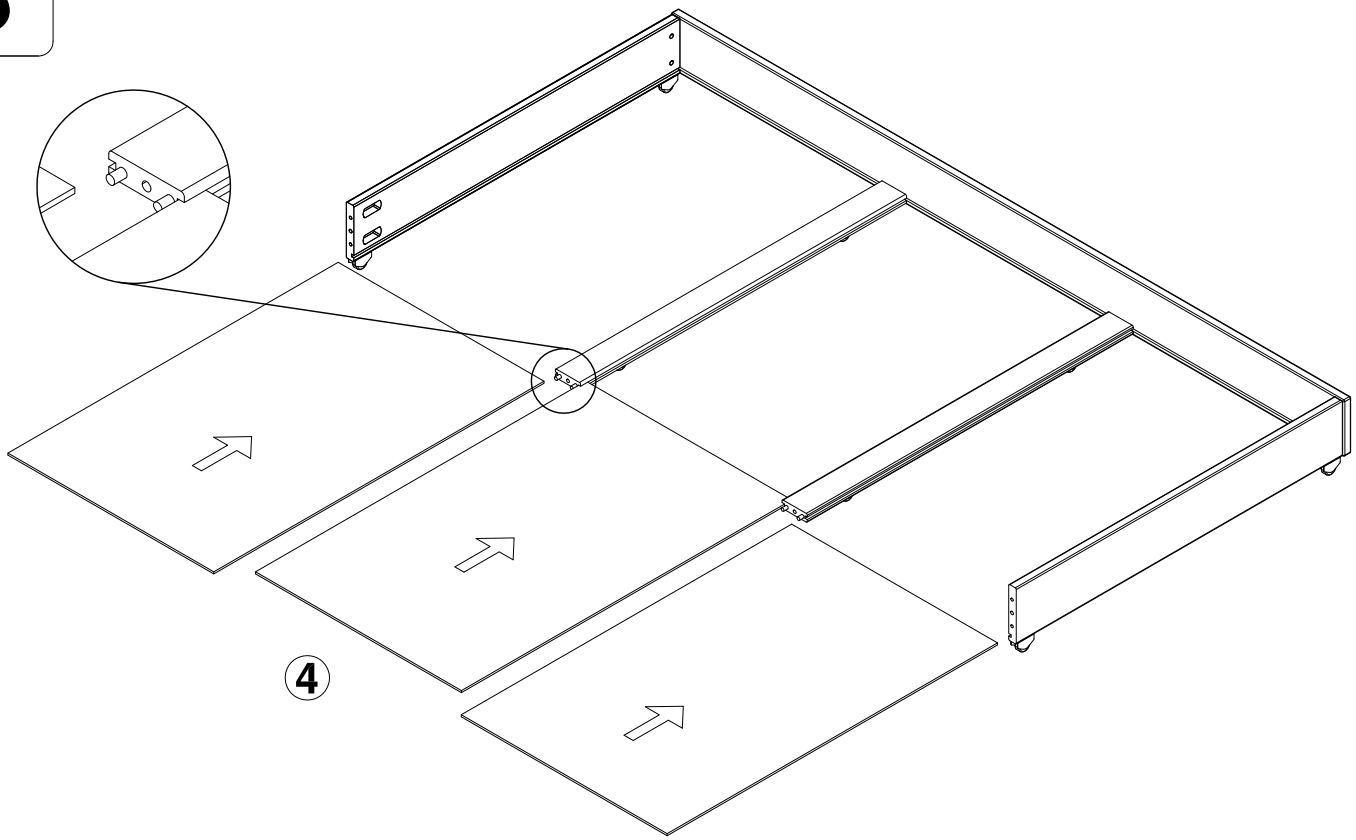


## 4

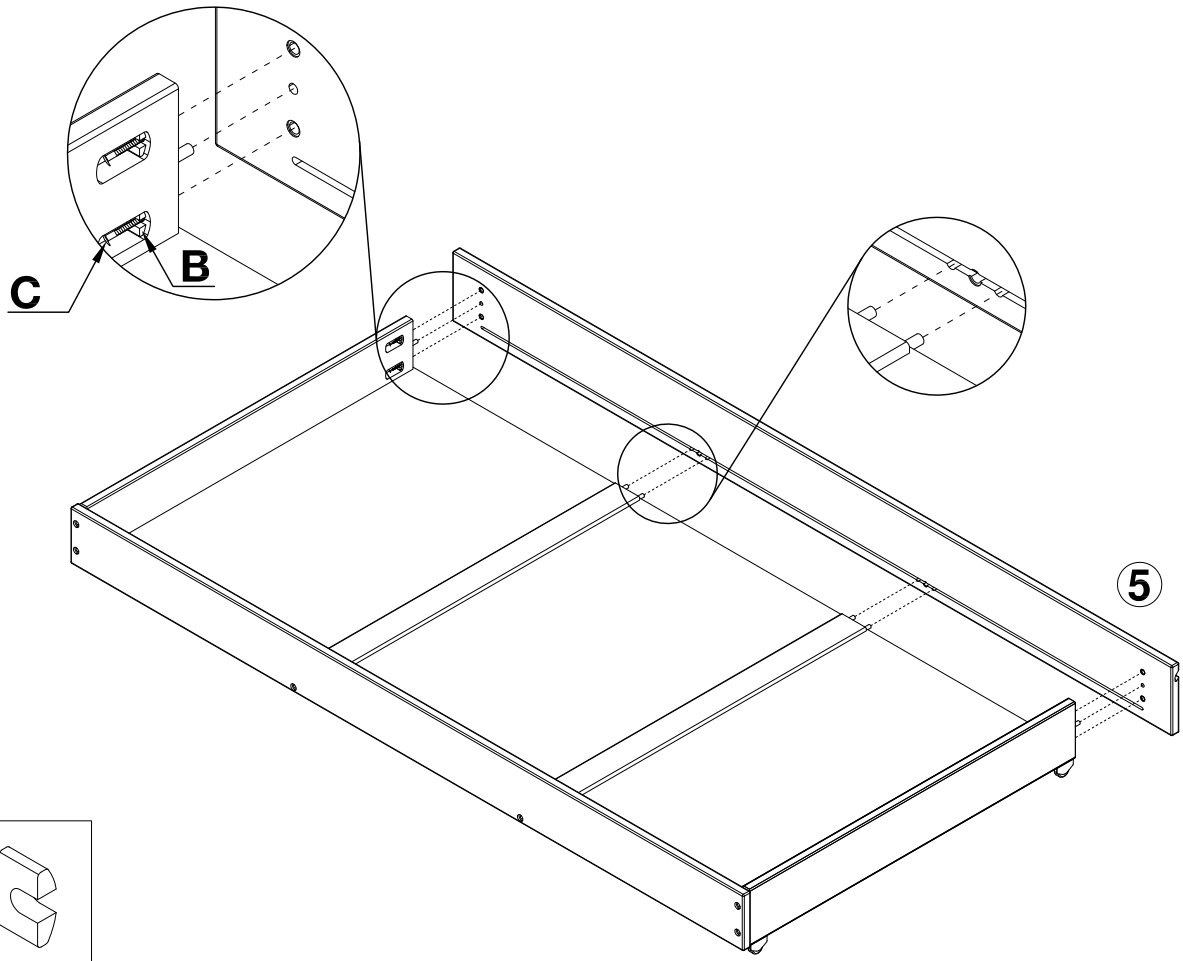

Cx4

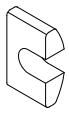

Bx4

# 5

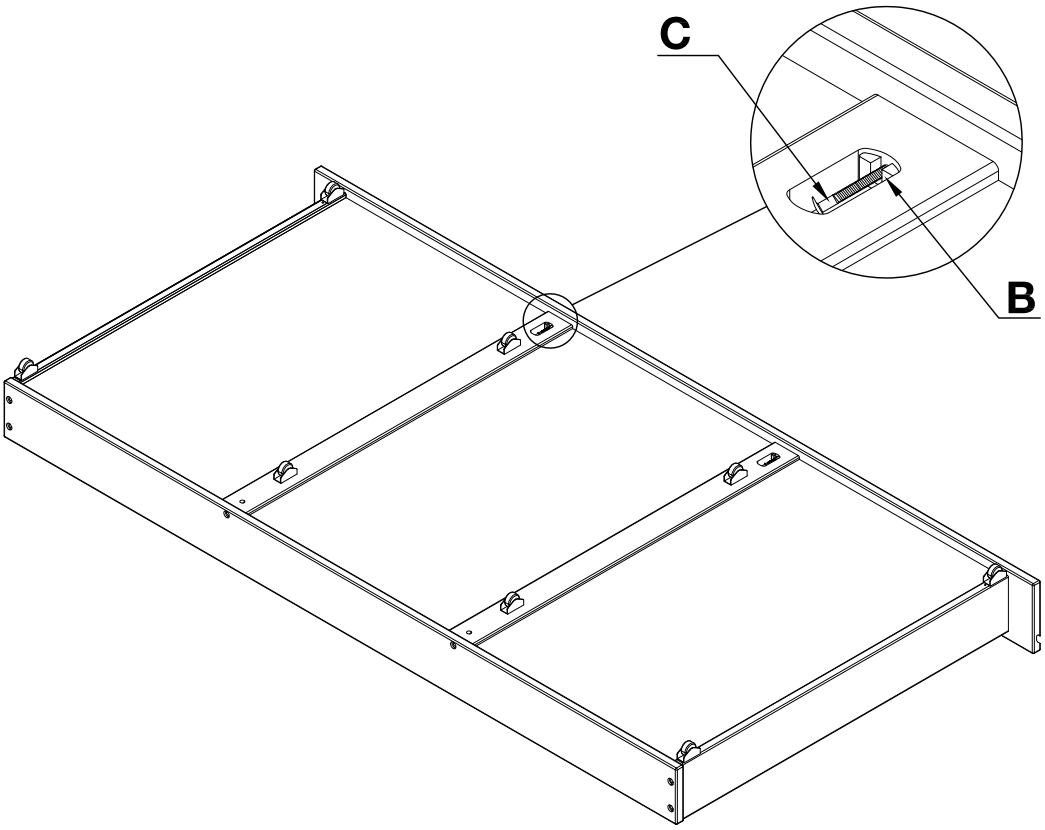


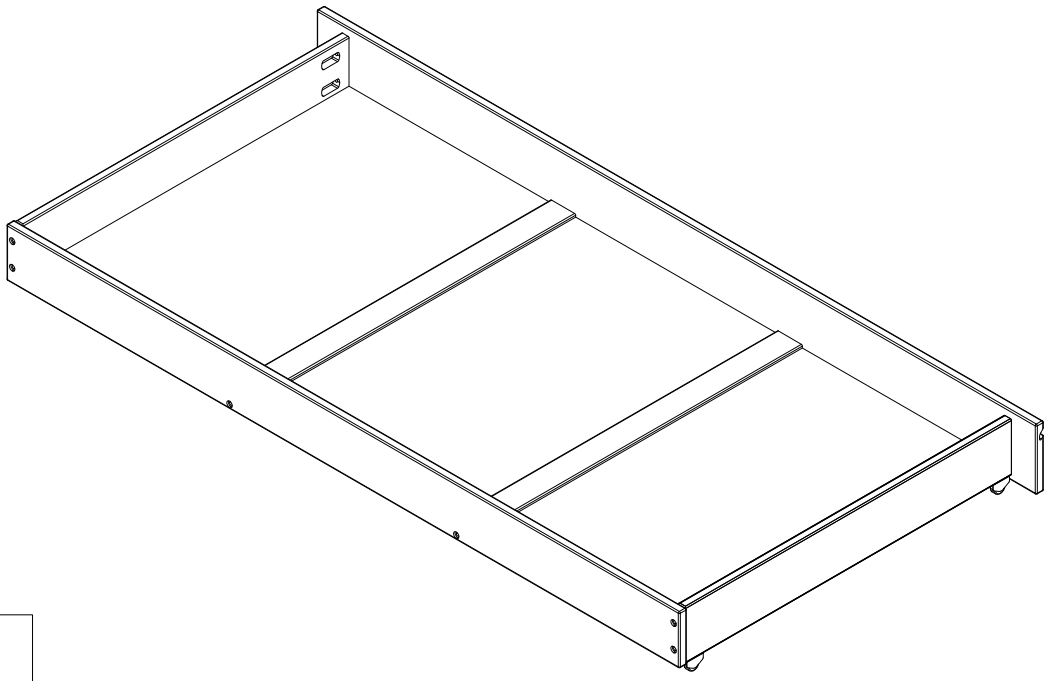

Cx2

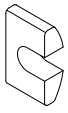

Bx2

# Kids Furniture Care Instructions

We hope you love your new Boori Kids furniture and it becomes an important part of your family home. In order to keep your furniture looking its best, please follow these care instructions.

## Assembly

- When assembling your furniture, please follow the assembly instructions and use the tools supplied
- Boori products should only be assembled by an adult away from children
- Heavy components should be lifted by two people to prevent injury
- Every section that is assembled should be checked after assembly before moving onto the next stage

## Product Positioning

- This product is made of timber and is therefore flammable
- Do not place your Boori furniture near open flames, fire places or extreme heat sources such as electric or gas heaters
- Do not direct sprayers or humidifiers at the furniture as they can cause damage
- Where possible avoid exposing furniture to extreme changes in temperature. Timber is a natural product and will want to expand and contract as the temperature varies. Extreme temperature variations can damage timber products.
- Avoid direct exposure to sunlight as this can cause our natural timber and plant oil colours to fade.
- Black rubber feet on items such as radios, computers and picture frames can cause marks. Always use a felt mat (not plastic) to protect your Boori furniture
- Do not place in damp environments or areas with high levels of moisture as this encourages mould growth.

## Cleaning

- Clean your furniture by wiping with a soft, damp cloth
- If necessary, use a mild soapy solution and wipe clean with a soft cloth
- Do not use strong household cleaners
- Always wipe in the direction of the wood grain, not in circles.
- Wipe up spills immediately with a soft cloth
- Protect the furniture against bedwetting as this can lead to discolouration

## Maintenance

- We advise that you regularly check the safety of your furniture
- Ensure all bolts and screws are tightened and check for loose connections, missing parts or sharp or pointed edges
- Avoid contact with sharp objects and hot liquids
- When moving furniture always lift and place it into position; do not drag. We recommend that two people lift or alter the positioning of the furniture

## Product testing Standards

- Standard: GB 28007-2011 EN 747-1: 2012+ A1: 2015 AS/NZS 4220: 2010