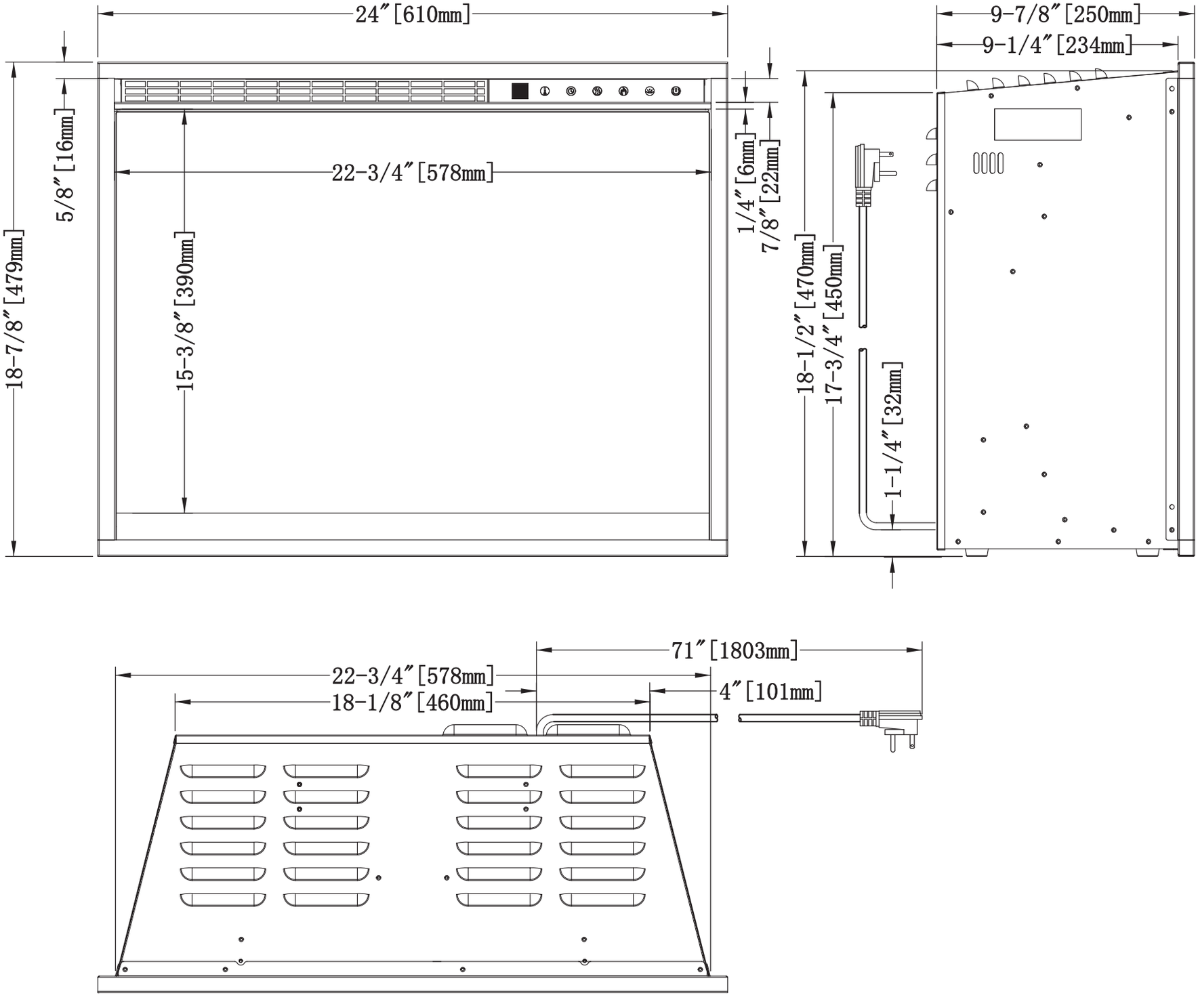
24″[610mm]
5/8″[16mm]
18-7/8″[479mm]
22-3/4″[578mm]
15-3/8″[390mm]
1/4″[6mm]
7/8″[22mm]
9-7/8″[250mm]
9-1/4″[234mm]
18-1/2″[470mm]
17-3/4″[450mm]
1-1/4″[32mm]
71″[1803mm]
22-3/4″[578mm]
18-1/8″[460mm]
4″[101mm]

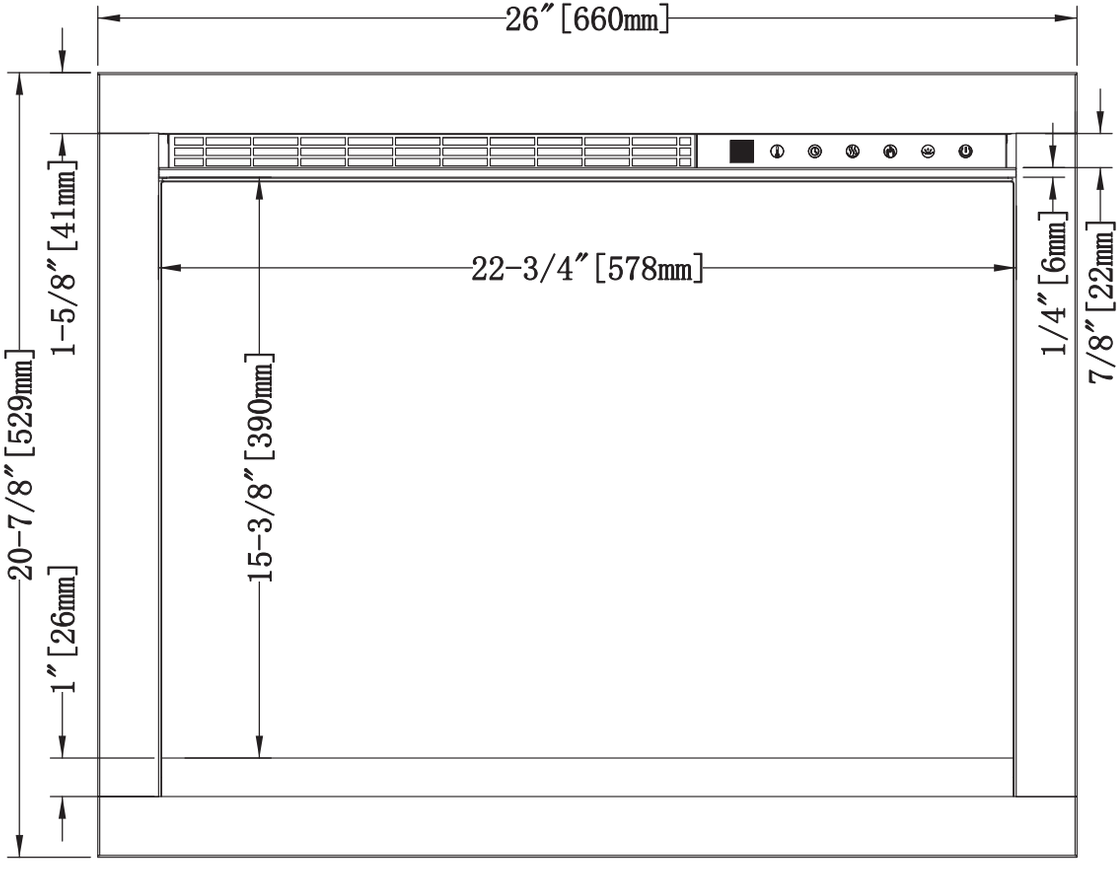
26″[660mm]
1-5/8″[41mm]
20-7/8″[529mm]
1″[26mm]
22-3/4″[578mm]
15-3/8″[390mm]
1/4″[6mm]
7/8″[22mm]

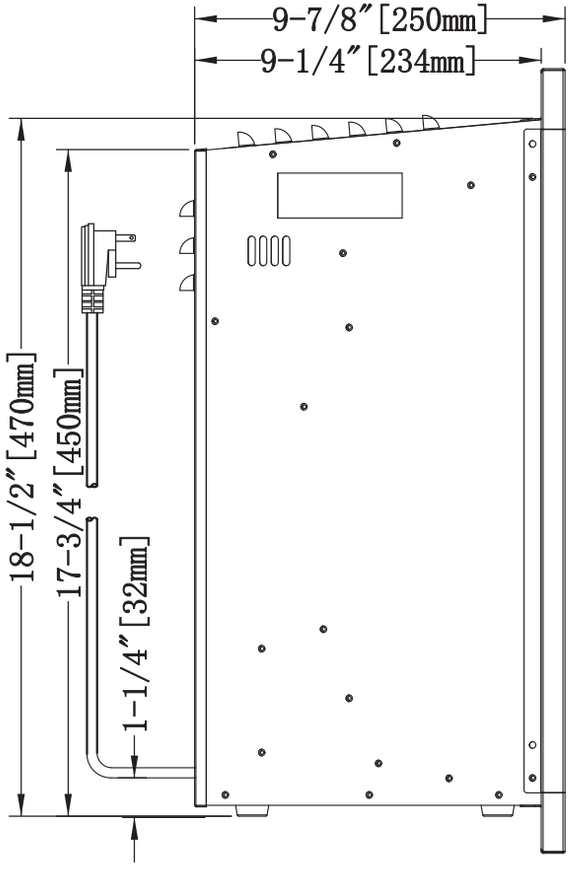
9-7/8″[250mm]
9-1/4″[234mm]
18-1/2″[470mm]
17-3/4″[450mm]
1-1/4″[32mm]

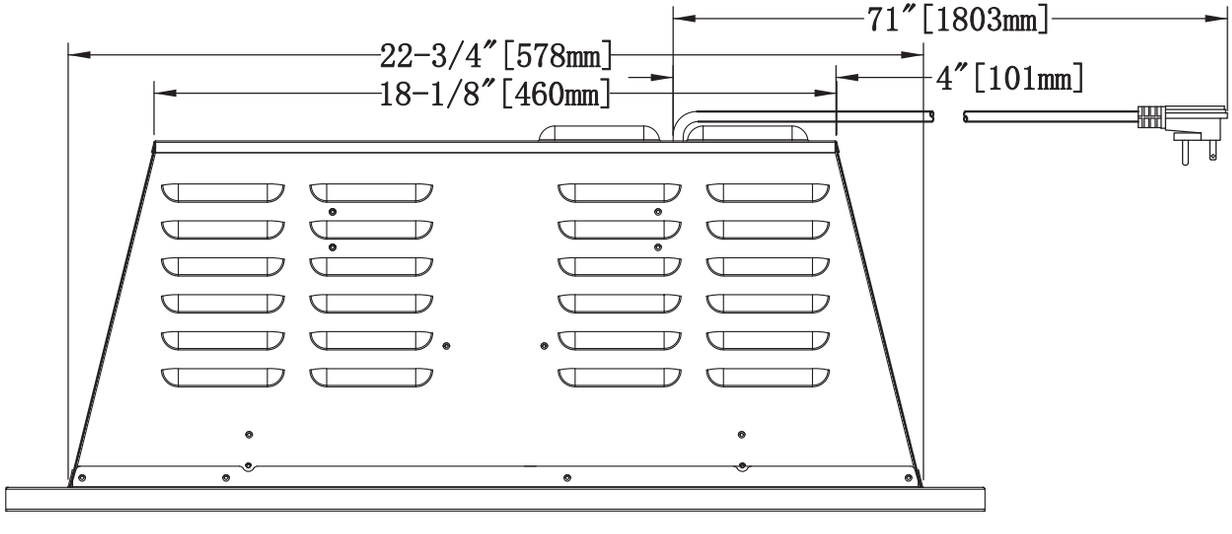
71″[1803mm]
22-3/4″[578mm]
18-1/8″[460mm]
4″[101mm]

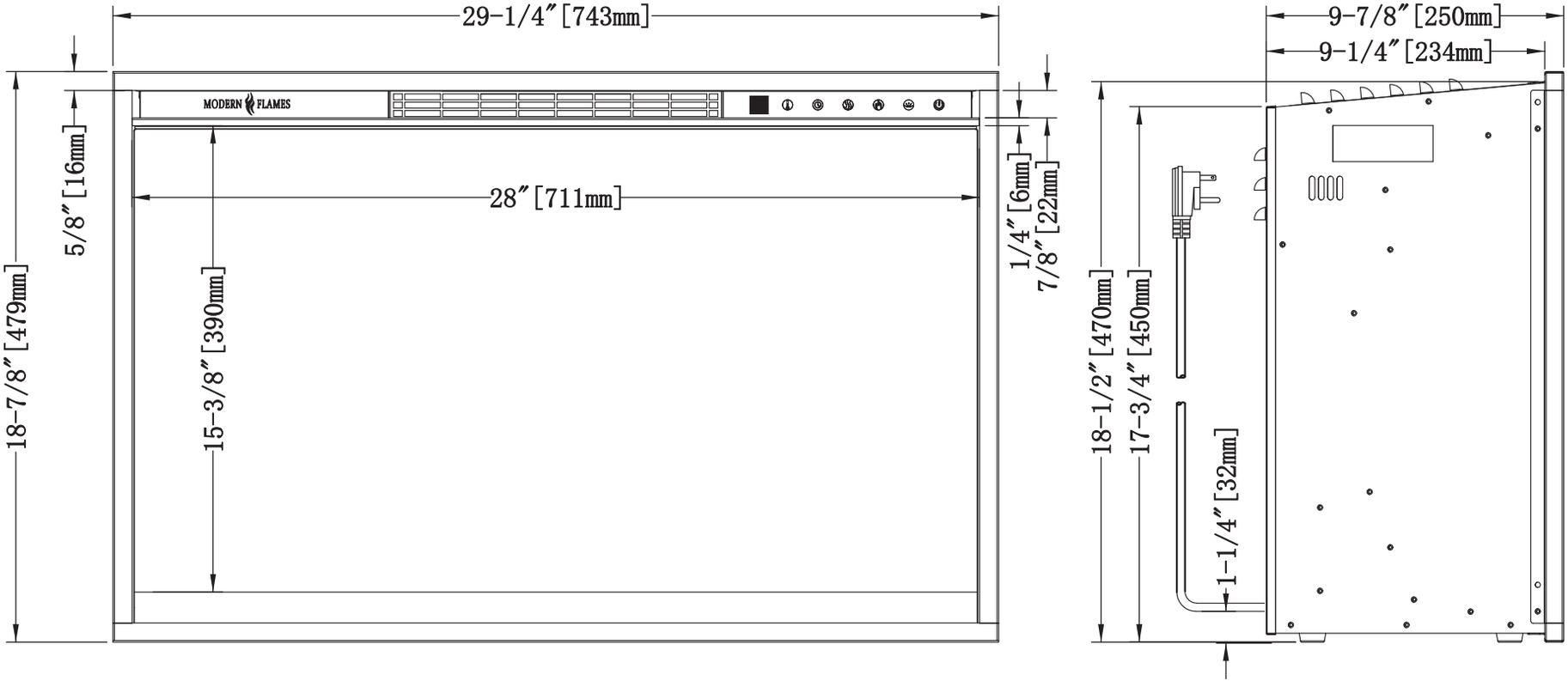
29-1/4″[743mm]
MODERN FLAMES
5/8″[16mm]
18-7/8″[479mm]
28″[711mm]
15-3/8″[390mm]
1/4″[6mm]
7/8″[22mm]
9-7/8″[250mm]
9-1/4″[234mm]
18-1/2″[470mm]
17-3/4″[450mm]
1-1/4″[32mm]

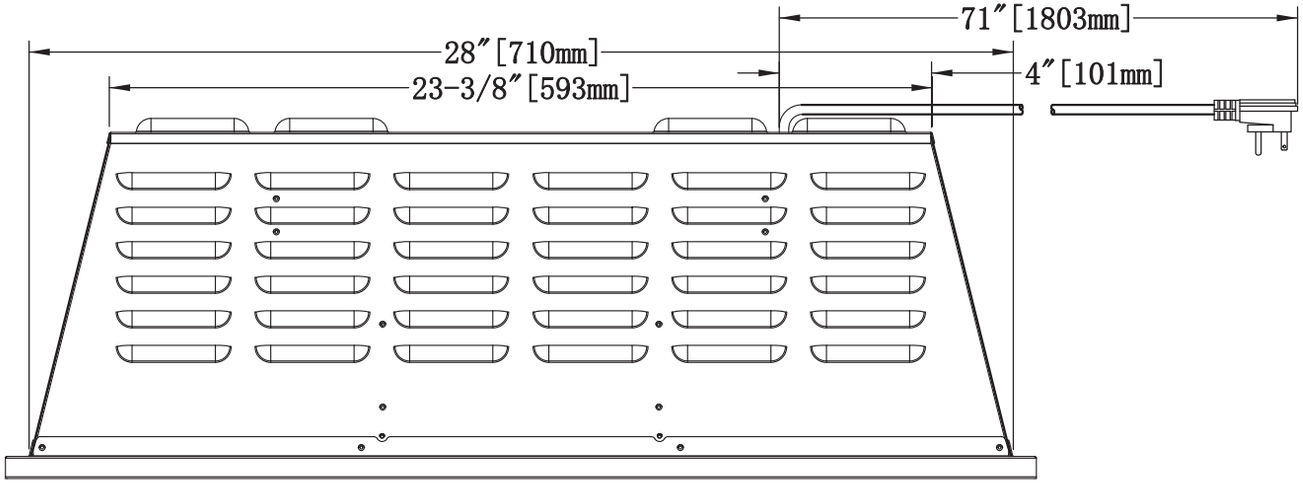
71″[1803mm]
28″[710mm]
4″[101mm]
23-3/8″[593mm]

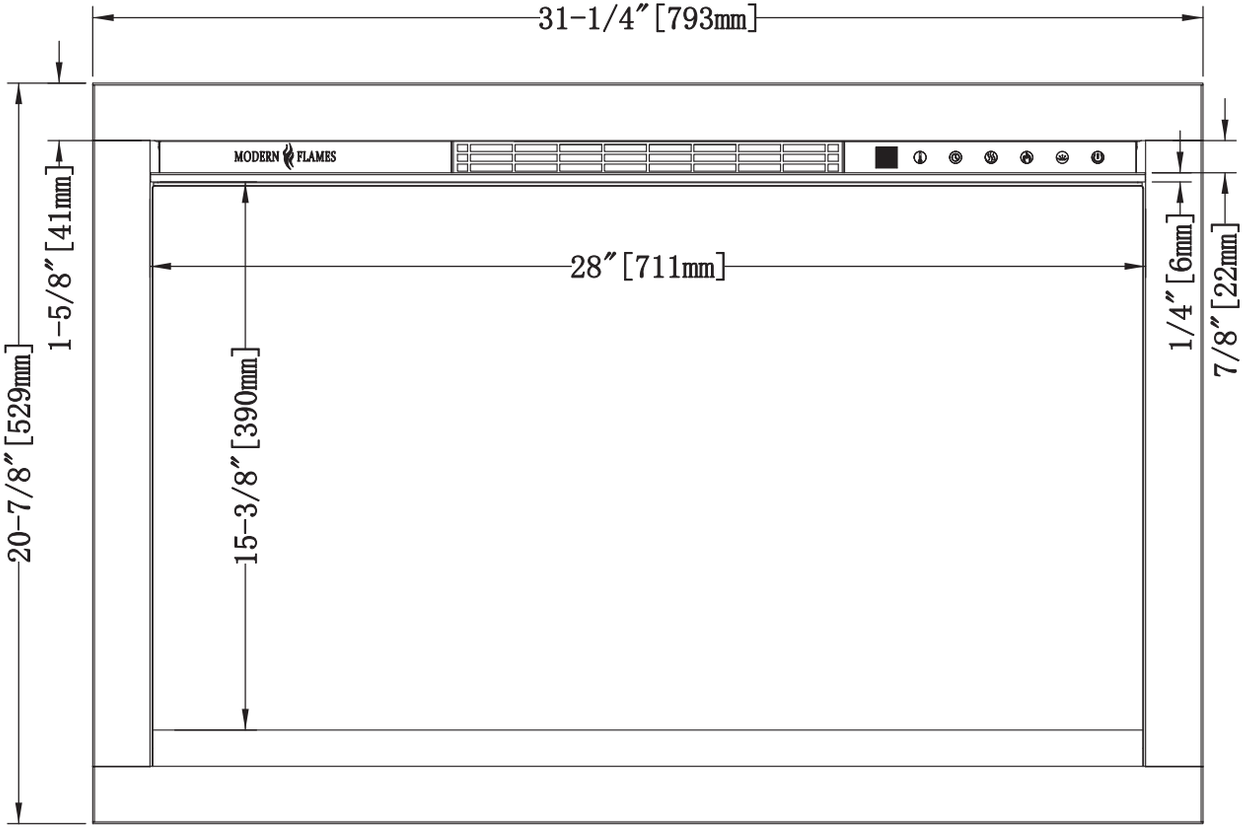
31-1/4″[793mm]
MODERN FLAMES
1-5/8″[41mm]
20-7/8″[529mm]
28″[711mm]
15-3/8″[390mm]
1/4″[6mm]
7/8″[22mm]

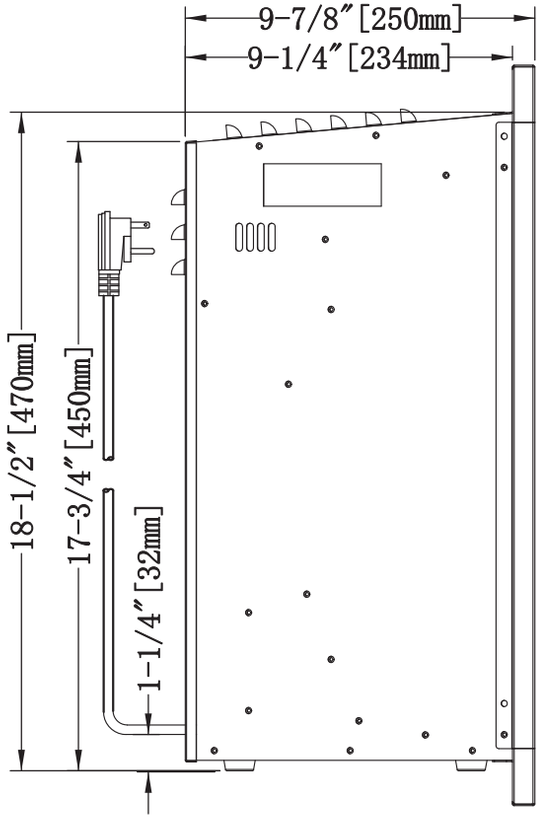
9-7/8″[250mm]
9-1/4″[234mm]
18-1/2″[470mm]
17-3/4″[450mm]
1-1/4″[32mm]

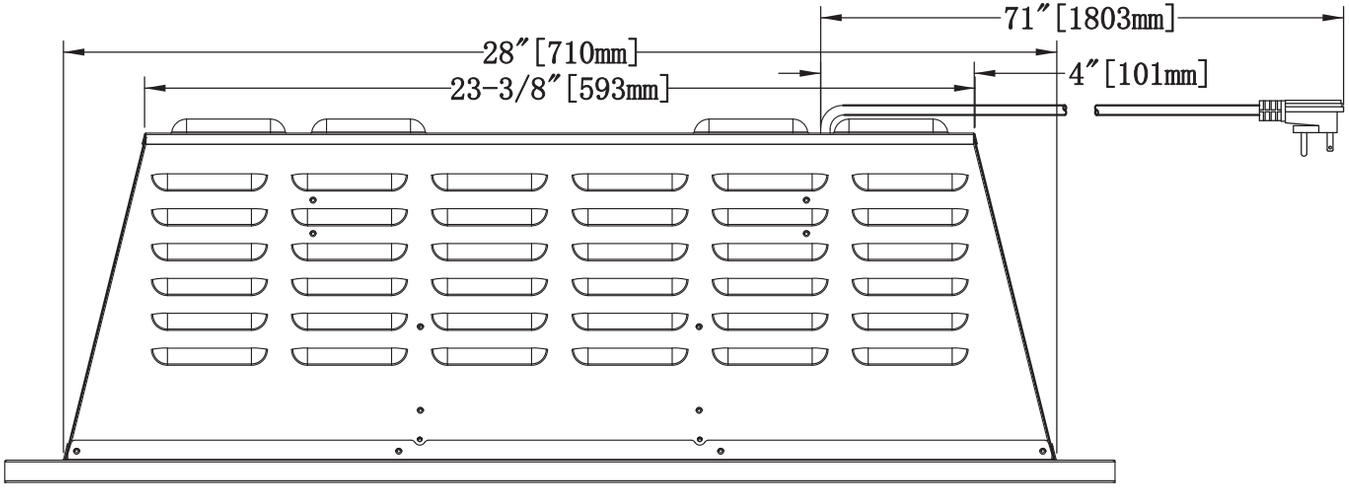
71″[1803mm]
28″[710mm]
4″[101mm]
23-3/8″[593mm]

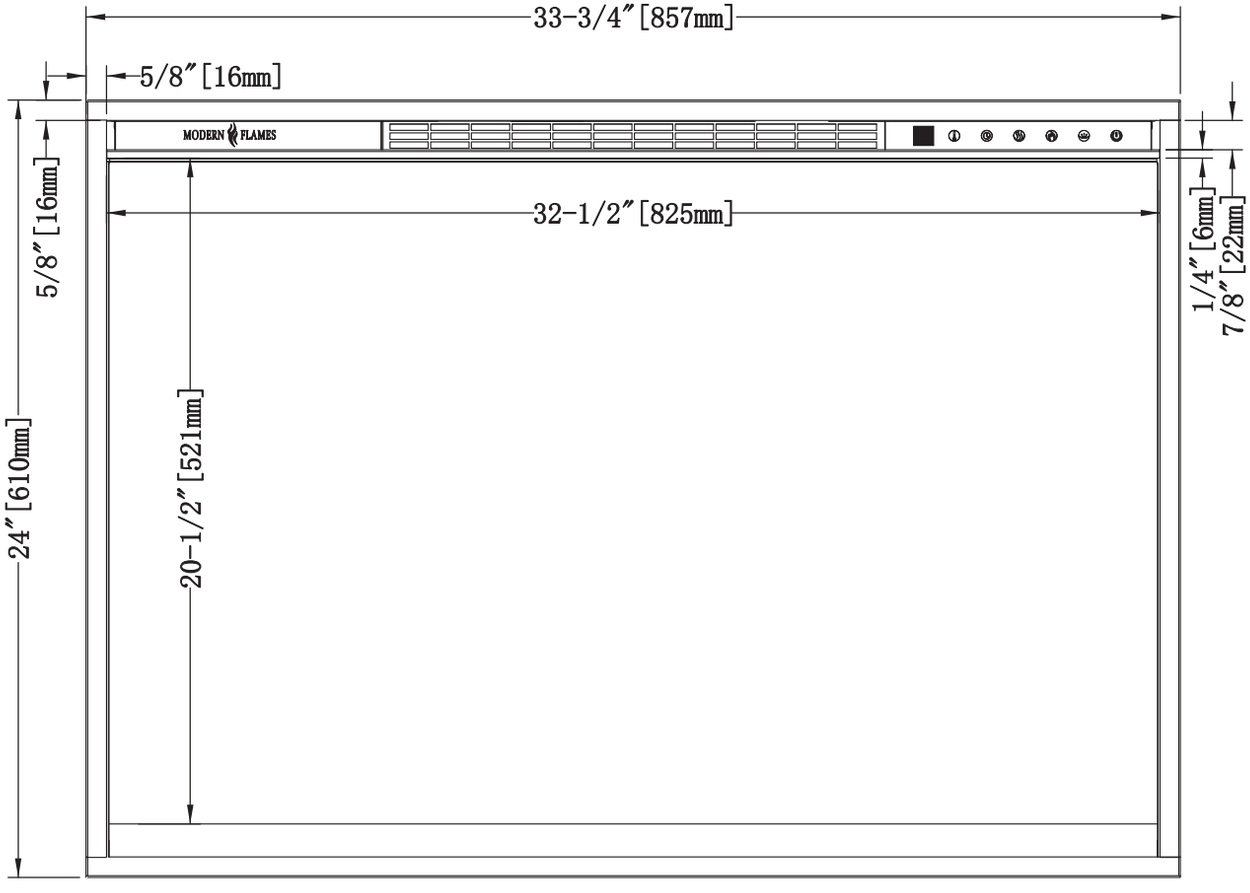
33-3/4″[857mm]
5/8″[16mm]
MODERN FLAMES
5/8″[16mm]
32-1/2″[825mm]
1/4″[6mm]
7/8″[22mm]
24″[610mm]
20-1/2″[521mm]

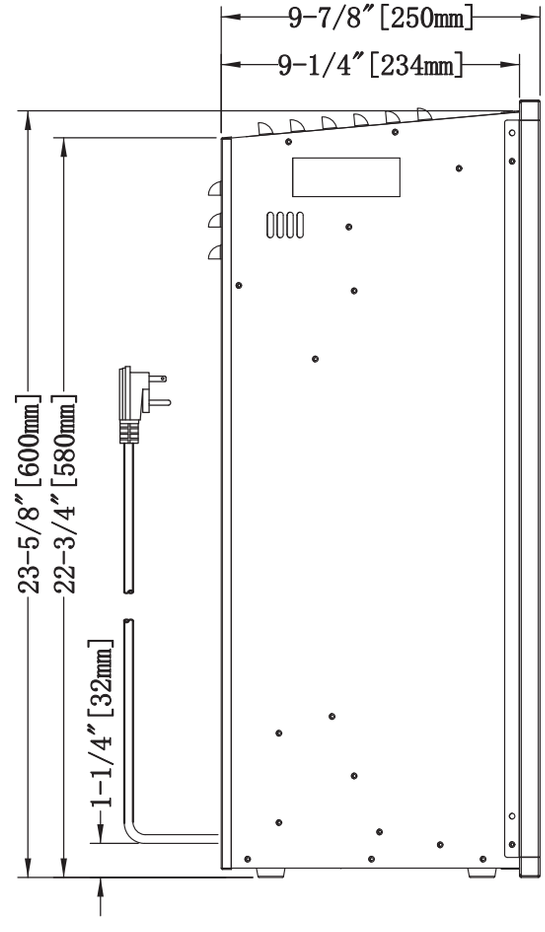
9-7/8″[250mm]
9-1/4″[234mm]
23-5/8″[600mm]
22-3/4″[580mm]
1-1/4″[32mm]

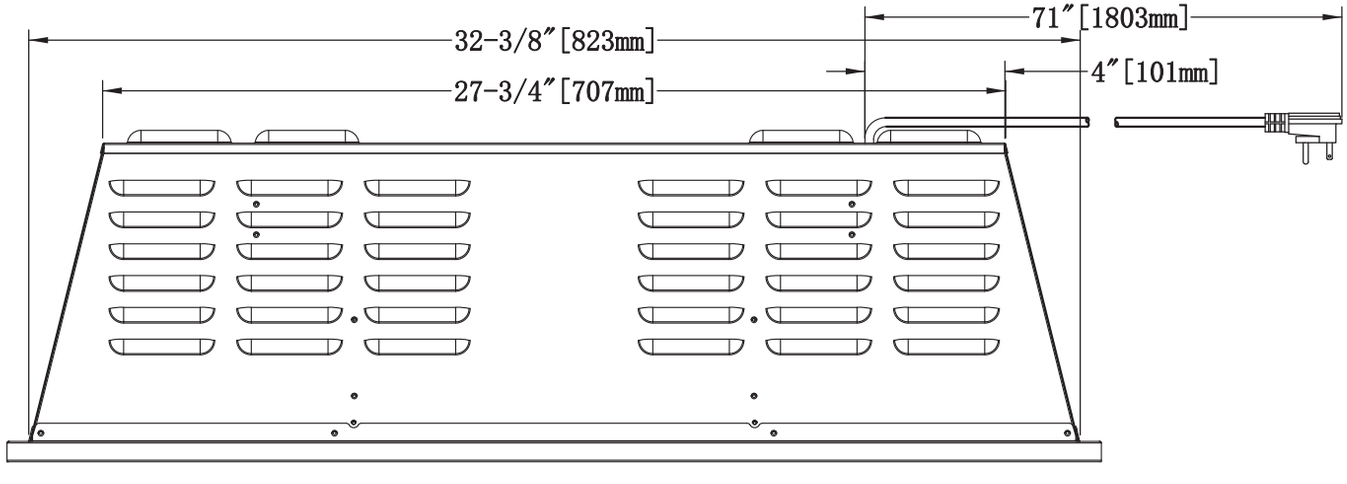
71″[1803mm]
32-3/8″[823mm]
4″[101mm]
27-3/4″[707mm]

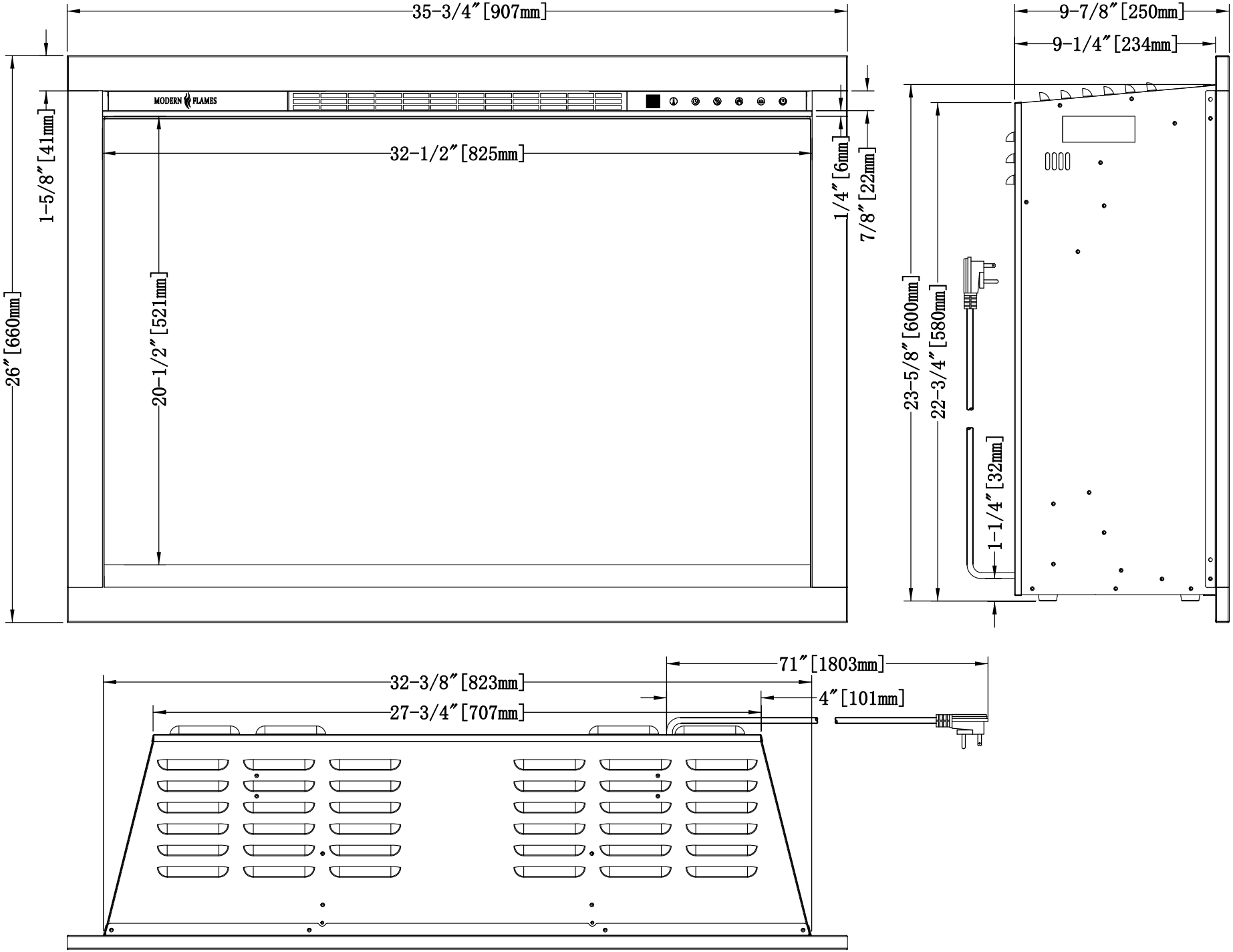
35-3/4″[907mm]
MODERN FLAMES
1-5/8″[41mm]
32-1/2″[825mm]
1/4″[6mm]
7/8″[22mm]
26″[660mm]
20-1/2″[521mm]
9-7/8″[250mm]
9-1/4″[234mm]
23-5/8″[600mm]
22-3/4″[580mm]
1-1/4″[32mm]
71″[1803mm]
32-3/8″[823mm]
4″[101mm]
27-3/4″[707mm]

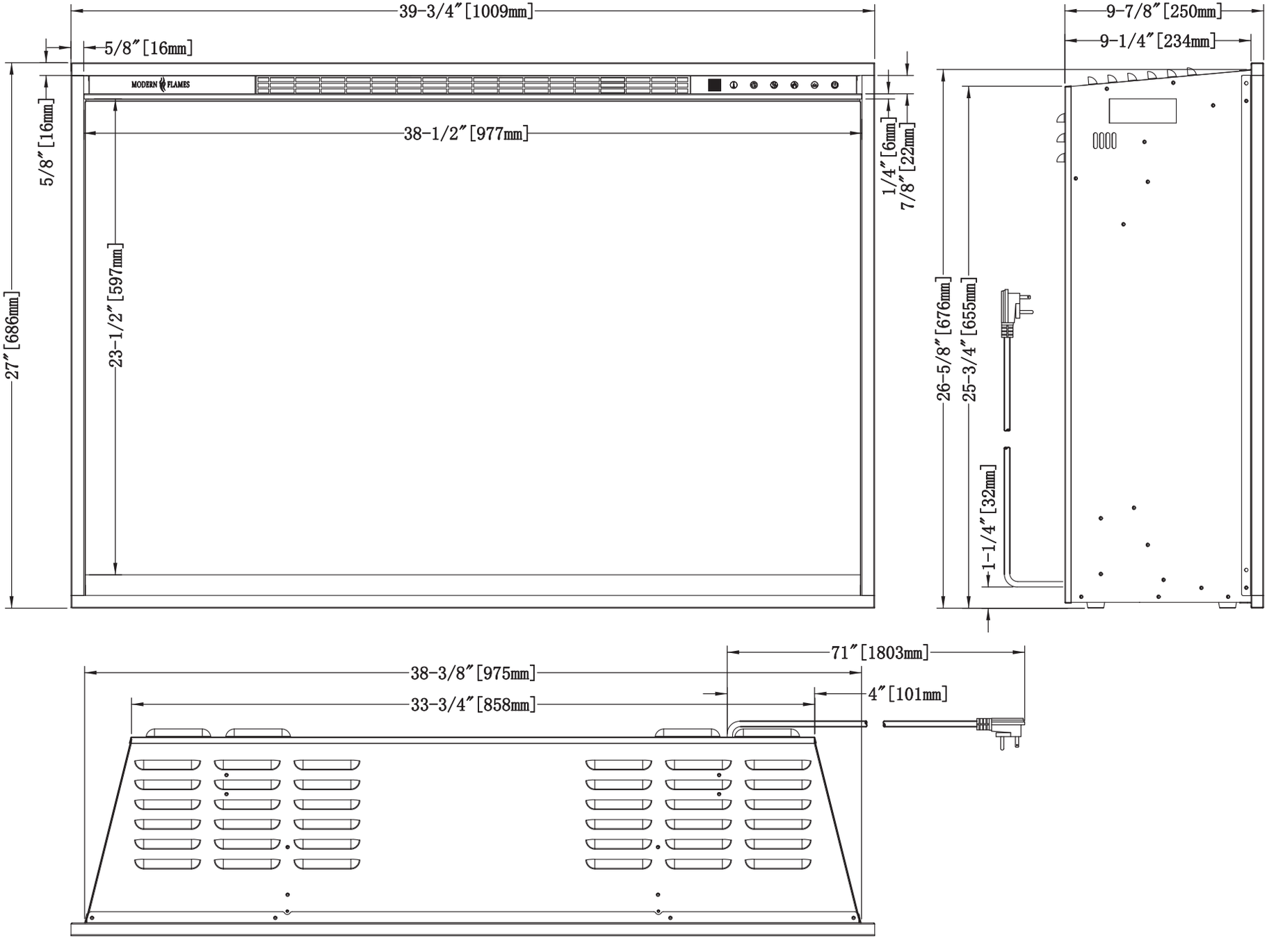
39-3/4″[1009mm]
5/8″[16mm]
MODERN FLAMES
5/8″[16mm]
38-1/2″[977mm]
1/4″[6mm]
7/8″[22mm]
27″[686mm]
23-1/2″[597mm]
9-7/8″[250mm]
9-1/4″[234mm]
26-5/8″[676mm]
25-3/4″[655mm]
1-1/4″[32mm]
71″[1803mm]
38-3/8″[975mm]
4″[101mm]
33-3/4″[858mm]

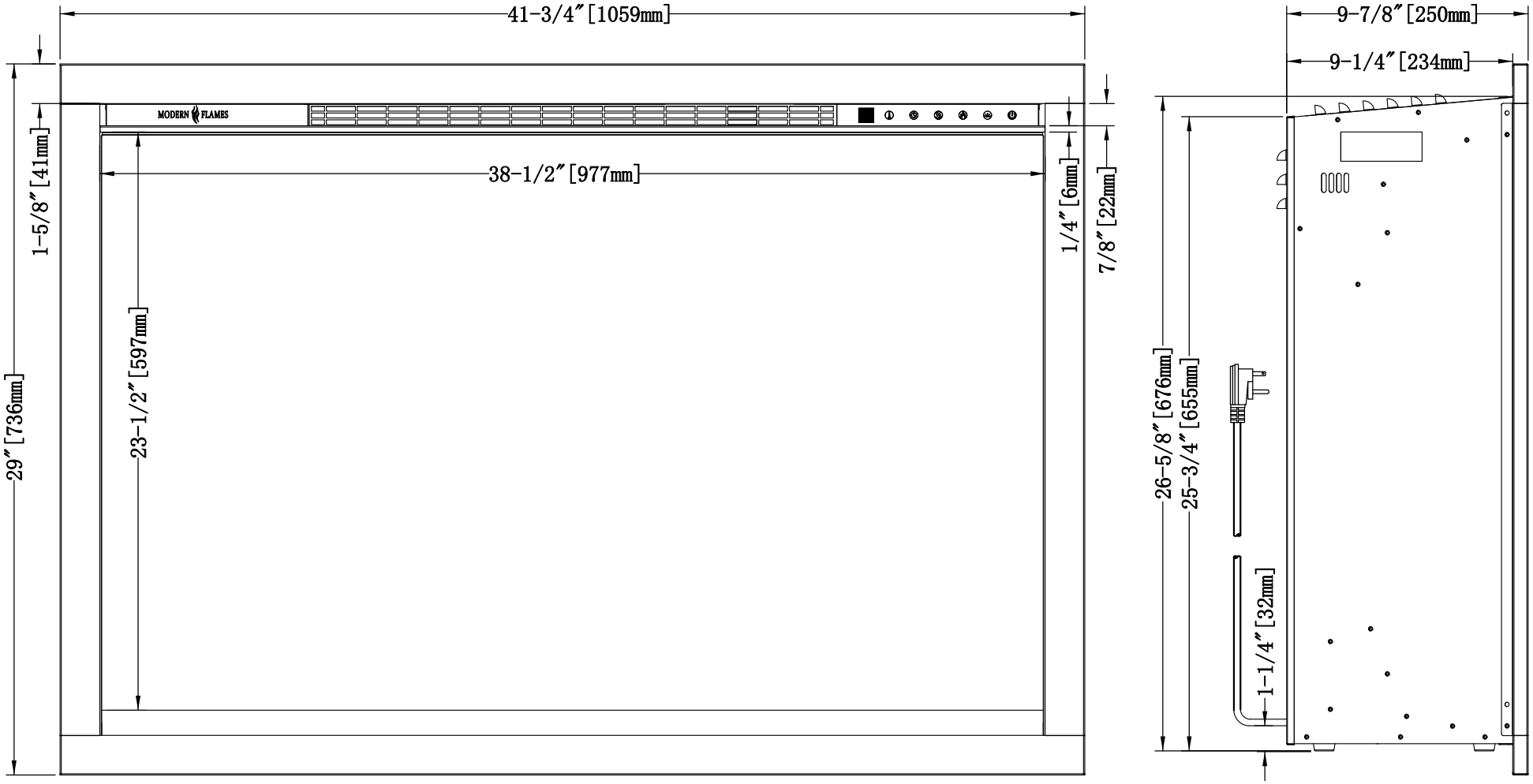
41-3/4″[1059mm]
MODERN FLAMES
1-5/8″[41mm]
38-1/2″[977mm]
1/4″[6mm]
7/8″[22mm]
29″[736mm]
23-1/2″[597mm]
9-7/8″[250mm]
9-1/4″[234mm]
26-5/8″[676mm]
25-3/4″[655mm]
1-1/4″[32mm]

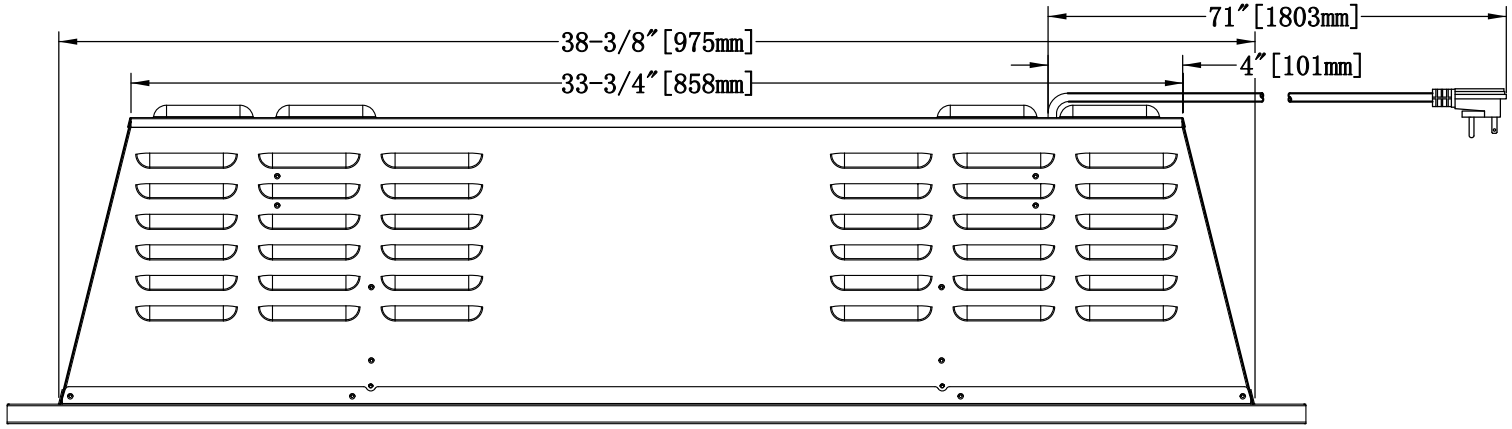
71″[1803mm]
38-3/8″[975mm]
4″[101mm]
33-3/4″[858mm]

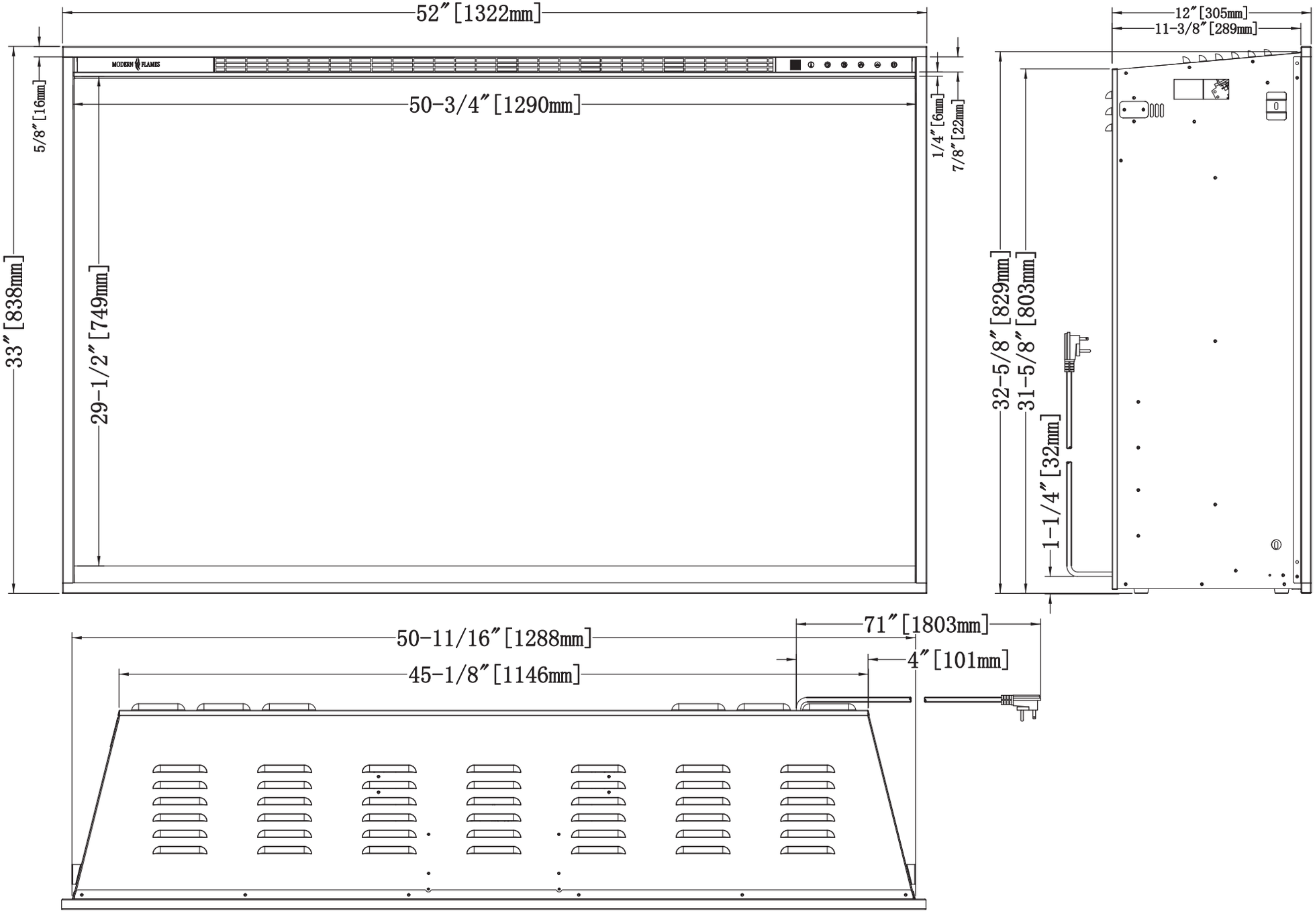
52″[1322mm]
MODERN FLAMES
5/8″[16mm]
50-3/4″[1290mm]
1/4″[6mm]
7/8″[22mm]
33″[838mm]
29-1/2″[749mm]
12″[305mm]
11-3/8″[289mm]
32-5/8″[829mm]
31-5/8″[803mm]
1-1/4″[32mm]
71″[1803mm]
50-11/16″[1288mm]
4″[101mm]
45-1/8″[1146mm]

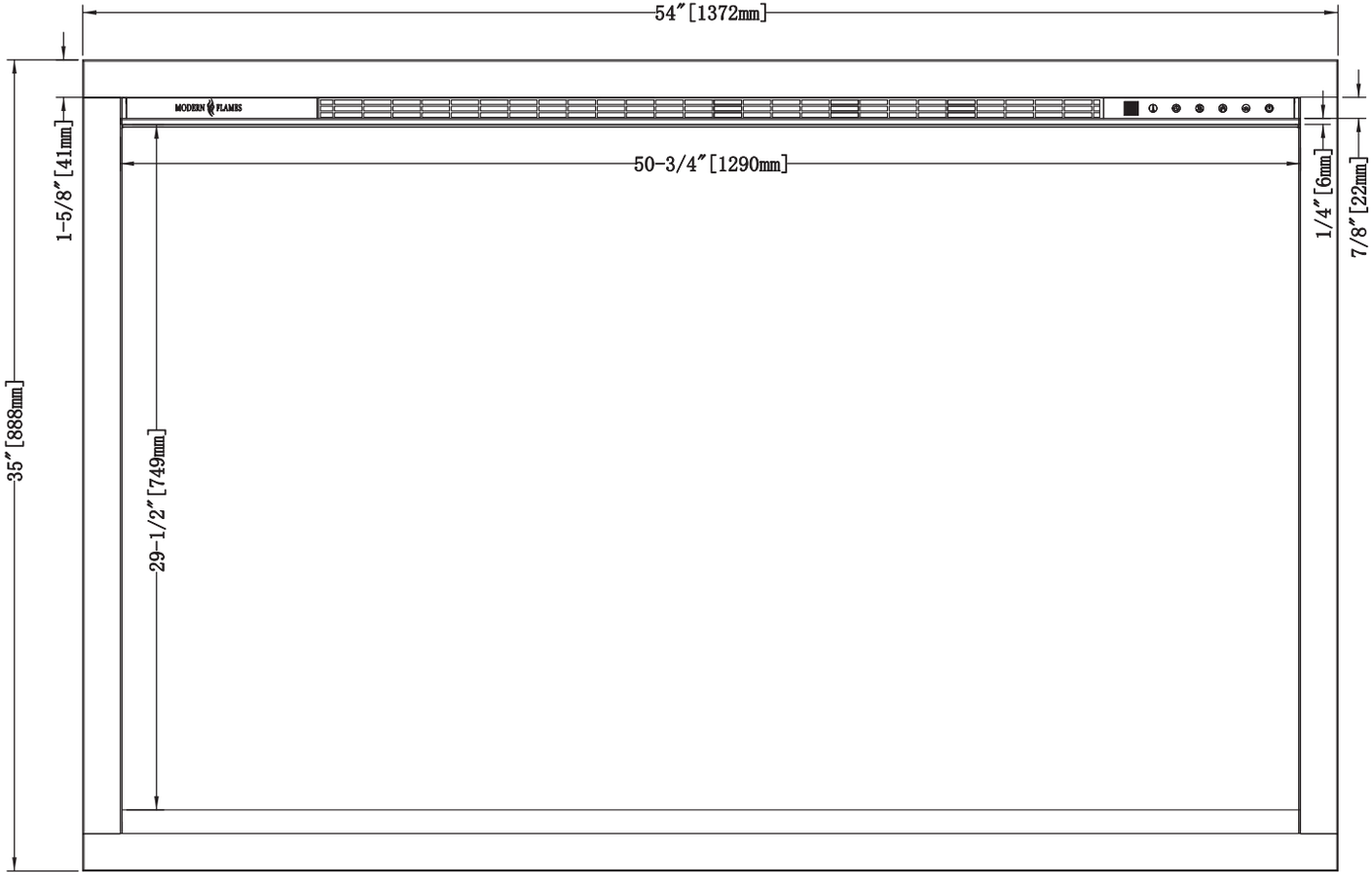
54″[1372mm]
MODERN FLAMES
1-5/8″[41mm]
50-3/4″[1290mm]
1/4″[6mm]
7/8″[22mm]
35″[888mm]
29-1/2″[749mm]

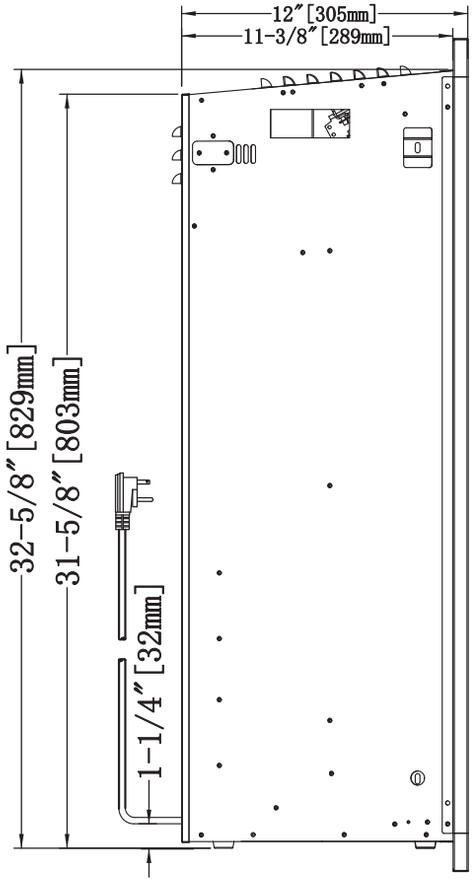
12″[305mm]
11-3/8″[289mm]
32-5/8″[829mm]
31-5/8″[803mm]
1-1/4″[32mm]

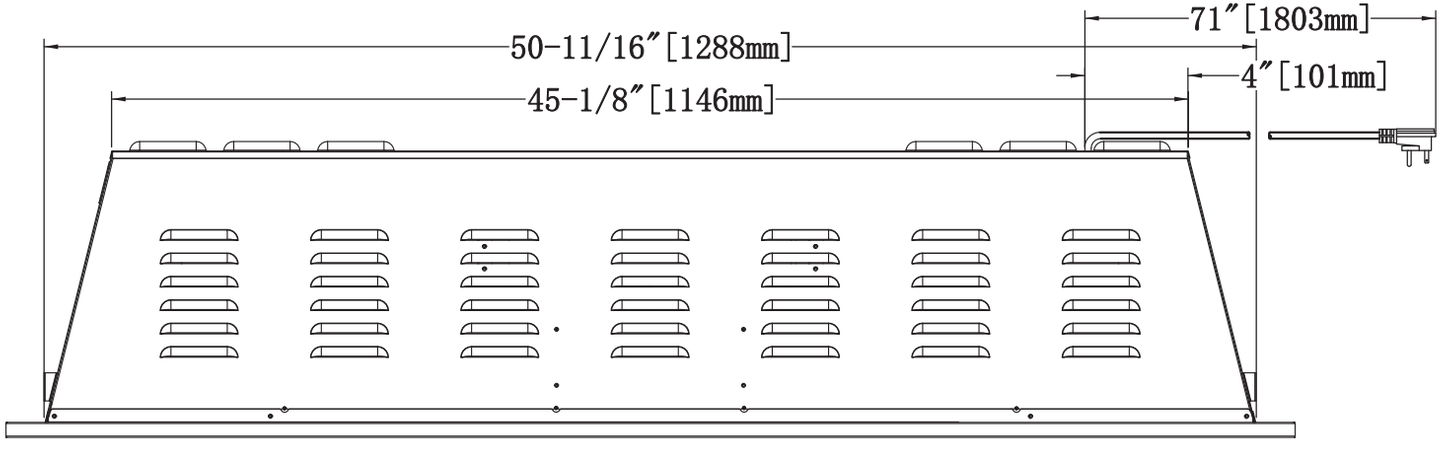
71″[1803mm]
50-11/16″[1288mm]
4″[101mm]
45-1/8″[1146mm]