UK

solis

Solis: The World's 3rd Largest PV Inverter Manufacturer

Ginlong Technologies Co., Ltd.

Developing technology to power the world with clean energy

COMPANY MISSION

COMPANY PROFILE

Established in 2005, Ginlong (Solis) (Stock Code: 300763.SZ) stands as the world's third-largest PV inverter manufacturer. As a global provider of solar and energy storage solutions catering to residential, commercial, and utility-scale customers, we deliver value across the solar supply chain. Operating under the Solis brand, our solar inverter product line employs innovative string technology, ensuring top-tier reliability validated through rigorous international certifications.

By amalgamating a global supply chain with world-class R&D and manufacturing capabilities, Ginlong tailors Solis inverters to each regional market, with dedicated teams of local experts providing exceptional service and support. Our proven bankability has garnered support from leading financial institutions, assuring robust, long-term returns on investment. Collaborating with stakeholders, we are committed to expediting the world's journey towards a more sustainable future.

solis

2005
Establishment

800+
R&D Team

TOP500
Global New Energy Enterprises

80GW+
Manufacturing Capacity

COMPANY HISTORY

2005

Ginlong Technologies established in Ningbo, China

2006

One of the first inverters certified to UK G83

2009

First Asian string inverter to achieve USA UL1741 certification

2010

Second Asian inverter certified to AS4777/ AS 3100

2011

Ginlong hosted IEC61400 second annual meeting

2015

Ginlong inverter installed on the Eiffel Tower in Paris

Achieved top 12 inverter sales ranking in Europe

Earned third place ranking in China PV string inverter brand value (2015-2016)

2016

Listed by Asia PV innovation

Awarded Best Distribution Inverter Brand by PVBL

2017

Granted prestigious APVIA Technology Achievement Award (2017-2021)

2018

Single-phase string inverters ranked 2nd in global market shares (Wood Mackenzie)

2019

Ginlong (Solis) listed as a Public Company Stock Code: 300763.SZ

Ginlong (Solis) Ranked Third among Asian Brands by BloombergNEF Bankability

2020

Three-phase string inverters ranked 3rd in global market shares (Wood Mackenzie)

Ginlong Solis won PVBL 2019 Annual Top Global PV Brand Award

2021

National Enterprise Technology Center

Ranked among the top 500 global new energy companies

National technological innovation demonstration enterprise

Excellent after - sales service system certification

Sixth batch of individual champions in 2021 by (MIIT)

2022

The World's 3rd Largest PV Inverter Manufacturer (2021-2022)

No.2 PV Inverter Supplier Among Listed Companies in Shipments in China

National laboratory qualification CNAS certification

2023

Forbes China's Top 50 Innovative Enterprises

2024

Ranks among the top PV brands by EUPD research for 9 consecutive years (2016-2024)

35 Service Centers

With 35 offices and service centers around the world, including the UK, France, Italy, Netherlands, Spain, Poland, Sweden, Turkey, Germany, Lithuania, Switzerland, Greece, Portugal, Ireland, Austria, Romania, South Africa, China, India, Indonesia, Korea, Myanmar, Malaysia, Philippines, Pakistan, Singapore, Sri Lanka, Thailand, Vietnam, Australia, Brazil, USA, Canada, Mexico and Chile, Solis has a well-established and expanding global presence.

HQ Service Centers

GLOBAL REACH LOCAL EXPERTISE

CONTENTS

P11

Residential Energy Storage Solutions

The Solis residential energy storage family, covers single-phase and three-phase application scenarios. It aims to provide energy storage solutions for PV systems to achieve the goal of residential zero-carbon green electricity. The power range covers 3kW - 20kW.

P33

Commercial Energy Storage Solutions

Solis commercial storage product S6-EH3P(30-50)K-H, is a highly integrated three-phase energy storage inverter, it has multiple functions, high safety level, strong energy supply reliability, which is a powerful tool for commercial PV energy storage projects.

P41

Residential Solar PV Solutions

Solis residential string inverters are cost-effective and efficient residential green power leaders, providing smarter green power solutions for your residential buildings.

P55

Commercial & Industrial Solar PV Solutions

Solis' C&I string inverter product line is broad with a power range cover 25kW - 150kW, providing you with the best industry green power solutions.

P77

Utility Scale Solar PV Solutions

Solis has optimized and innovated the whole process of utility solar PV solutions, integrated PV system design, digital management, and IoT technology.

P87

Export Power Management Solutions

In some countries, local regulations limit the amount of PV power that can be exported to the grid or allow no export. Solis offers two export limitation solutions for single and multiple inverters system.

P91

SolisCloud: Intelligent Solar Energy System Monitoring

The SolisCloud intelligent monitoring system includes hardware and software products and is a comprehensive energy management solution. Hardware products, including data stick, data box, EPM and PLC, etc; transmit to SolisCloud online energy management platform. Real-time monitoring, visualized management and remote O & M of residential, C&I and utility scale solar PV plants.

Residential Energy Storage Solutions

The Solis residential energy storage family has abundant products, covering single-phase and three-phase application scenarios. It aims to provide energy storage solutions for PV systems to achieve the goal of real residential zero-carbon green electricity. The power range covers 3kW - 20kW. We can according to the requirements of your project application scenarios, rely on our flexible products to provide you with the best residential zero-carbon green power solutions.

Models:

S5-EH1P(3-6)K-L
S6-EH1P8K-L-PLUS
S6-EH3P(5-10)K2-H
S6-EH3P(5-10)K-H-EU
S6-EH3P(12-20)K-H
S5-EA1P3K-L
S6-EA1P(3.6-6)K-L
EVC-S1-1P7K-S, EVC-S1-3P22K-S
S6-EO1P(4-5)K-48-EU

Output:

3 kW - 20 kW

Residential Energy Storage Solution

Generator on Grid side

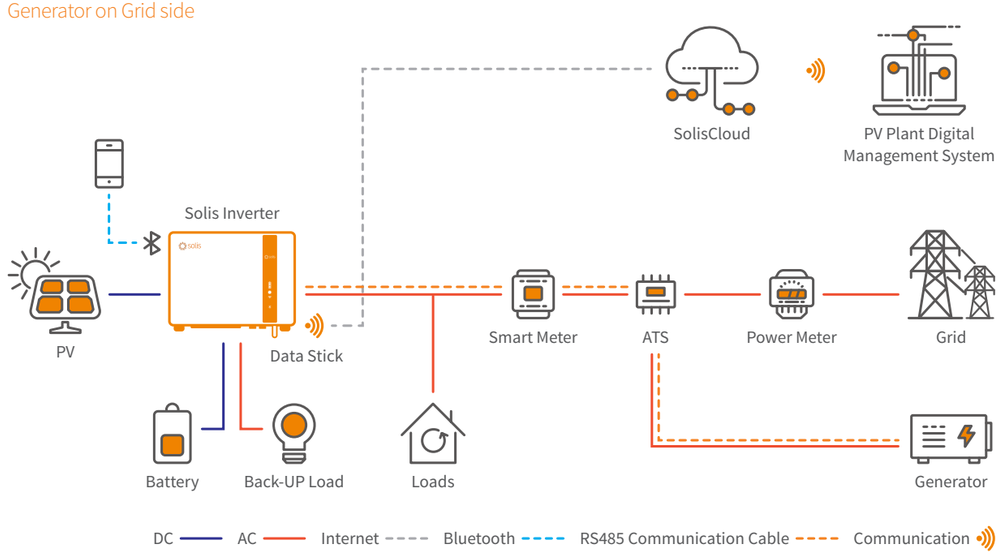

Residential Energy Storage Solution

Generator on Gen port side

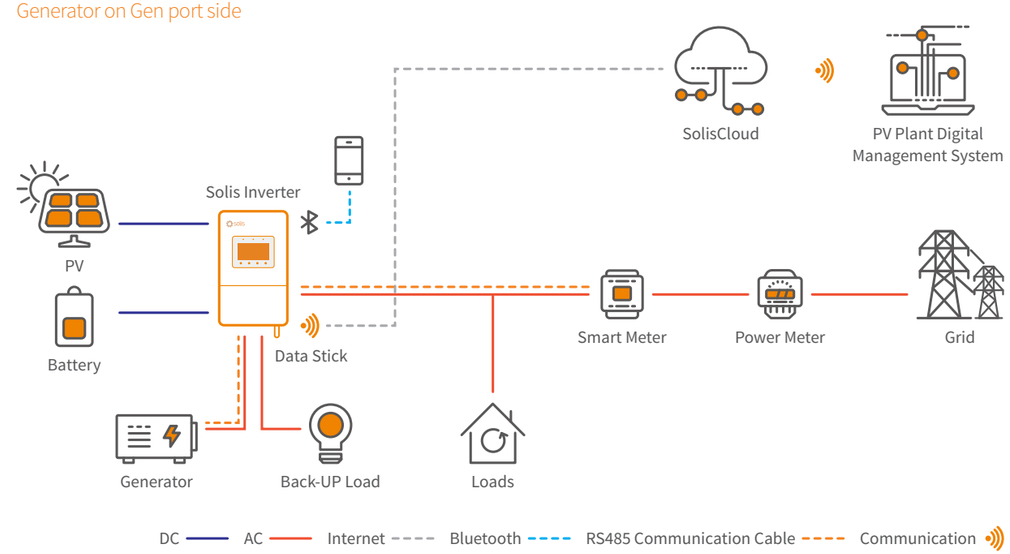

S5-EH1P(3-6)K-L

Solis Single Phase Low Voltage Energy Storage Inverters

Features:

- Max. string input current 15A
- Uninterrupted power supply, 20ms reaction
- Multiple working modes to make maximize self-consumption, increase benefit
- Higher charge-discharge efficiency, improving the economic benefits
- AFCI protection, proactively reduces fire risk
- Fanless design, long lifespan
- Compatible with lithium & lead-acid batteries, increased more choice in different markets
- Intelligent EMS function, improving battery's reliability
- 24-hour fully intelligent energy management, Real-time grasp of PV plant status
- Remotely control & upgrade function, making digital power plant maintenance at your fingertips

Models:

S5-EH1P3K-L / S5-EH1P3.6K-L

S5-EH1P4.6K-L / S5-EH1P5K-L

S5-EH1P6K-L

360º View

DATASHEET

S5-EH1P(3-6)K-L

Models	3K	3.6K	4.6K	5K	6K
Input DC (PV side)					
Recommended max. PV array size	6 kW	7.2 kW	9.2 kW	10 kW	12 kW
Max. usable PV input power	4.8 kW	5.7 kW	8 kW	8 kW	8 kW
Max. input voltage	600 V				
Rated voltage	330 V				
Start-up voltage	120 V				
MPPT voltage range	90-520 V				
Max. input current	15 A / 15 A				
Max. short circuit current	22.5 A / 22.5 A				
MPPT number/Max. input strings number	2/2				
Battery					
Battery type	Li-ion / Lead-acid				
Battery voltage range	42 - 58 V				
Battery capacity	50 - 2000 Ah				
Max. charge / discharge power	3 kW		5 kW		
Max. charge / discharge current	62.5 A		100 A		
Communication	CAN				
Output AC (Back-up)					
Rated output power	3 kW		5 kW		
Max. apparent output power	4.5 kVA, 10 sec		7 kVA, 10 sec		
Back-up switch time	<20 ms				
Rated output voltage	1/N/PE, 220 V / 230 V				
Rated frequency	50 Hz / 60 Hz				
Rated output current	14 A / 13.5 A		23 A / 22 A		
THDv (@linear load)	<2%				
Input AC (Grid side)					
Input voltage range	187-265 V				
Max. input current	20.5 A / 20 A	25 A / 23.5 A	31.5 A / 30 A	34.5 A / 33 A	34.5 A / 33 A
Frequency range	45-55 Hz / 55-65 Hz				
Output AC (Grid side)					
Rated output power	3 kW	3.6 kW	4.6 kW	5 kW	6 kW
Max. apparent output power	3.3 kVA	4 kVA	4.6 kVA	5.5 kVA	6.6 kVA
Operation phase	1/N/PE				
Rated grid voltage	220 V / 230 V				
Rated grid frequency	50 Hz / 60 Hz				
Rated grid output current	13.7 A / 13.1 A	16.4 A / 15.7 A	20.9 A / 20 A	22.8 A / 21.7 A	27.3 A / 26.1 A
Max. output current	15 A	18.5 A	21 A	25 A	30 A
Power factor	>0.99 (0.8 leading - 0.8 lagging)				
THDi	<2%				
Efficiency					
Max. efficiency	>97.1%				
EU efficiency	>96.5%				
Protection					
DC reverse-polarity protection	Yes				
Short circuit protection	Yes				
Output over current protection	Yes				
Surge protection	DC Type II / AC Type II				
Ground fault monitoring	Yes				
Integrated AFCI	Yes (1)				
Protection class/Over voltage category	I/II				
General Data					
Dimensions (W*H*D)	333*505*249 mm				
Weight	17.9kg		18.1 kg		
Topology	High frequency isolation (for battery)				
Operating ambient temperature range	-25 ~ +60°C				
Ingress protection	IP65				
Cooling concept	Natural convection				
Max. operation altitude	3000 m				
Grid connection standard	G98 or G99, VDE-AR-N 4105/VDE V 0124, EN 50549-1, VDE 0126/UTE C 15/VFR:2019, RD 1699/RD 244/UNE 206006/ UNE 206007-1, CEI 0-21, C10/11, NRS 097-2-1, EIFS 2018.2, IEC 62116, IEC 61727, IEC 60068, IEC 61683, EN 50530, MEA, PEA				
Safety/EMC standard	IEC/EN 62109-1/-2, EN 61000-6-2/-3				
Features					
DC connection	MC4 connector				
AC connection	Quick connection plug				
Display	7.0"LCD color screen display				
Communication	RS485, Optional: Wi-Fi, GPRS				

(1) Activation required.

S6-EH1P8K-L-PLUS

Solis Single Phase Low Voltage Energy Storage Inverters

New PLUS model provides solutions for demanding power scenarios

Features:

- Generator-compatible to extend backup duration during grid power outage
- Multiple inverters can operate together to form a microgrid
- Supports dual backup ports for intelligent control of critical and non-critical loads
- 10 seconds of 200% overload capability
- Automatic switchover time is <4ms, providing seamless transitions from grid to backup
- Ensures excellent power supply stability, keeping the load unaffected by a weak grid or generator supply fluctuations

Models:

S6-EH1P8K-L-PLUS

DATASHEET S6-EH1P8K-L-PLUS

Models	8K
Input DC (PV side)	
Recommended max. PV array size	16 kW
Max. usable PV input power	12.8 kW
Max. input voltage	500 V
Rated voltage	330 V
Start-up voltage	90 V
MPPT voltage range	90-435 V
Max. input current	32 A / 32 A
Max. short circuit current	40 A / 40 A
MPPT number/Max. input strings number	2/4
Battery	
Battery type	Li-ion / Lead-acid
Battery voltage range	40-60 V
Max. charge / discharge power	8 kW
Max. charge / discharge current	190 A
Communication	CAN/RS485
Output AC (Grid side)	
Rated output power	8 kW
Max. apparent output power	8 kVA
Operation phase	L/N/PE
Rated grid voltage	220 V / 230 V
Rated grid frequency	50 Hz / 60 Hz
Rated grid output current	36.4 A / 34.8 A
Max. output current	36.4 A / 34.8 A
Power factor	>0.99 (0.8 leading - 0.8 lagging)
THDi	<2%
Input AC (Grid side)	
Input voltage range	187-253 V
Max. input current	50 A
Frequency range	45-55 Hz / 55-65 Hz
Output AC (Back-up)	
Rated output power	8 kW
Max. apparent output power	2 times of rated power, 10 s
Back-up switch time	<4 ms
Rated output voltage	L/N/PE, 220 V / 230 V
Rated frequency	50 Hz / 60 Hz
Rated output current	36.4 A / 34.8 A
Max. AC Passthrough current	50 A
THDv (@linear load)	<2%
Efficiency	
Max. efficiency	96.2%
EU efficiency	96.1%
BAT charged by PV/AC Max. efficiency	95.3%/93.9%
BAT discharged to AC Max. efficiency	93.8%
Protection	
Ground fault monitoring	Yes
DC reverse-polarity protection	Yes
Integrated AFCI 2.0	Optional
Protection class/Over voltage category	I / II (PV and BAT), III (MAINS and BACKUP and GEN)
General Data	
Dimensions (W*H*D)	335*560*227 mm
Weight	22.2 kg
Topology	High frequency isolation (for battery)
Operating ambient temperature range	-40 ~ +60°C
Ingress protection	IP66
Cooling concept	Intelligent redundant fan-cooling
Max. operation altitude	3000 m
Grid connection standard	NRS 097-2-1, IEC 62116, IEC 61727, IEC 60068, IEC 61683, EN 50530, MEA, PEA, NBR 16149, NBR 16150
Safety/EMC standard	IEC/EN 62109-1/-2, EN 61000-6-2/-3
Features	
DC connection	MC4 plug (PV port) / Terminal Block (BAT port)
AC connection	Terminal Block
Display	LCD + Bluetooth + APP
Communication	RS485, CAN, Optional: Wi-Fi, GPRS, LAN

S6-EH3P(5-10)K2-H

Solis Three Phase High Voltage Energy Storage Inverters

Features:

- Industry leading 50A/10kW max charge/discharge rating
- Automatic UPS switching
- Supports Peak Shaving Mode
- Pre-made Battery, Meter and CAN cabling to reduce installation time
- Supports Unbalanced and Half-Wave Loads on both the Grid and Backup Port
- Compatible with multiple brands of lithium battery models
- Increased battery protection and operation features to extend battery life

Models:

S6-EH3P5K2-H / S6-EH3P6K2-H

S6-EH3P8K2-H / S6-EH3P10K2-H

360º View

• Monitoring Portal – www.soliscloud.com or SolisCloud App • Compatible Batteries – Check online at www.solisinverters.com

DATASHEET

S6-EH3P(5-10)K2-H

Models	5K	6K	8K	10K
Input DC (PV side)				
Recommended max. PV array size	10 kW	12 kW	16 kW	20 kW
Max. usable PV input power	8 kW	9.6 kW	12.8 kW	16 kW
Max. input voltage	1000 V			
Rated voltage	600 V			
Start-up voltage	160 V			
MPPT voltage range	200-850 V			
Max. input current	16 A / 16 A			
Max. short circuit current	24 A / 24 A			
MPPT number/Max. input strings number	2/2			
Battery				
Battery type	Li-ion			
Battery voltage range	120-600 V			
Max. charge / discharge power	5 kW	6 kW	8 kW	10 kW
Max. charge / discharge current	25 A		50 A	
Communication	CAN/RS485			
Output AC (Grid side)				
Rated output power	5 kW	6 kW	8 kW	10 kW
Max. apparent output power	5 kVA	6 kVA	8 kVA	10 kVA
Rated grid voltage	3/N/PE, 380 V / 400 V			
Rated grid frequency	50 Hz / 60 Hz			
Rated grid output current	7.6 A / 7.2 A	9.1 A / 8.7 A	12.2 A / 11.5 A	15.2 A / 14.4 A
Max. output current	7.6 A / 7.2 A	9.1 A / 8.7 A	12.2 A / 11.5 A	15.2 A / 14.4 A
Power factor	>0.99 (0.8 leading - 0.8 lagging)			
THDi	<3%			
Input AC (Grid side)				
Max. input power	7.5 kW	9 kW	12 kW	15 kW
Rated input current	11.4 A	13.8 A	18.2 A	22.8 A
Rated input voltage	3/N/PE, 380 V / 400 V			
Rated input frequency	50 Hz / 60 Hz			
Output AC (Back-up)				
Rated output power	5 kW	6 kW	8 kW	10 kW
Max. apparent output power	8 kVA, 60 sec	9.6 kVA, 60 sec	12.8 kVA, 60 sec	16 kVA, 60 sec
Back-up switch time	<10 ms			
Rated output voltage	3/N/PE, 380 V / 400 V			
Rated frequency	50 Hz / 60 Hz			
Rated output current	7.6 A / 7.2 A	9.1 A / 8.7 A	12.2 A / 11.5 A	15.2 A / 14.4 A
THDv (@linear load)	<2%			
Efficiency				
Max. efficiency	96.5%	97.0%	97.5%	97.9%
EU efficiency	96.8%	97.1%	97.4%	97.5%
BAT charged by PV Max. efficiency	98.4%	98.5%	98.2%	98.3%
BAT charged/discharged to AC Max. efficiency	97.3%	97.3%	97.5%	97.5%
Protection				
Anti-islanding protection	Yes			
Output over current protection	Yes			
Short circuit protection	Yes			
Integrated AFCI 2.0	Optional			
Integrated DC switch	Yes			
DC reverse-polarity protection	Yes			
PV over voltage protection	Yes			
Battery reverse protection	Yes			
General Data				
Dimensions (W*H*D)	600*500*210 mm		600*500*230 mm	
Weight	27.6 kg		30.2 kg	
Topology	Transformerless			
Self-consumption (night)	<25 W			
Operating ambient temperature range	-25 ~ +60°C			
Relative humidity	0-95%			
Ingress protection	IP66			
Cooling concept	Natural convection			
Max. operation altitude	4000 m			
Grid connection standard	G98 or G99, VDE-AR-N 4105 / VDE V 0124, EN 50549-1, VDE 0126 / UTE C 15/VFR:2019, RD 1699/RD 244 / UNE 206006 / UNE 206007-1, CEI 0-21, C10/11, NRS 097-2-1, TOR, EIFS 2018.2, IEC 62116, IEC 61727, IEC 60068, IEC 61683, EN 50530, MEA, PEA			
Safety/EMC standard	IEC/EN 62109-1/-2, IEC/EN 61000-6-1/-3			
Features				
PV connection	MC4 connector			
Battery connection	Quick connection plug			
AC connection	Quick connection plug			
Display	LED + Bluetooth + APP			
Communication	CAN, RS485, Optional: Wi-Fi, Cellular, LAN			

S6-EH3P(5-10)K-H-EU

Solis Three Phase High Voltage Energy Storage Inverters

Features:

- Integrated 3 or 4 MPPTs for multiple array orientations
- Industry leading 50A/10kW max charge/discharge rating
- Automatic UPS switching
- Supports Peak Shaving Mode
- Pre-made Battery, Meter and CAN cabling to reduce installation time
- Supports Unbalanced and Half-Wave Loads on both the Grid and Backup Port
- Compatible with multiple brands of lithium battery models
- Increased battery protection and operation features to extend battery life

Models:

S6-EH3P5K-H-EU / S6-EH3P6K-H-EU

S6-EH3P8K-H-EU / S6-EH3P10K-H-EU

360° View

• Monitoring Portal – www.soliscloud.com or SolisCloud App • Compatible Batteries – Check online at www.solisinverters.com

DATASHEET

S6-EH3P(5-10)K-H-EU

Models	5K	6K	8K	10K
Input DC (PV side)				
Recommended max. PV array size	10 kW	12 kW	16 kW	20 kW
Max. usable PV input power	8 kW	9.6 kW	12.8 kW	16 kW
Max. input voltage	1000 V			
Rated voltage	600 V			
Start-up voltage	160 V			
MPPT voltage range	200-850 V			
Max. input current	16 A / 16 A / 16 A		16 A / 16 A / 16 A / 16 A	
Max. short circuit current	24 A / 24 A / 24 A		24 A / 24 A / 24 A / 24 A	
MPPT number/Max. input strings number	3/3		4/4	
Battery				
Battery type	Li-ion			
Battery voltage range	120-600 V			
Max. charge / discharge power	5 kW	6 kW	8 kW	10 kW
Max. charge / discharge current	25 A		50 A	
Communication	CAN/RS485			
Output AC (Grid side)				
Rated output power	5 kW	6 kW	8 kW	10 kW
Max. apparent output power	5 kVA	6 kVA	8 kVA	10 kVA
Rated grid voltage	3/N/PE, 380 V / 400 V			
Rated grid frequency	50 Hz / 60 Hz			
Rated grid output current	7.6 A / 7.2 A	9.1 A / 8.7 A	12.2 A / 11.5 A	15.2 A / 14.4 A
Max. output current	7.6 A / 7.2 A	9.1 A / 8.7 A	12.2 A / 11.5 A	15.2 A / 14.4 A
Power factor	>0.99 (0.8 leading - 0.8 lagging)			
THDi	<3%			
Input AC (Grid side)				
Max. input power	7.5 kW	9 kW	12 kW	15 kW
Rated input current	11.4 A	13.8 A	18.2 A	22.8 A
Rated input voltage	3/N/PE, 380 V / 400 V			
Rated input frequency	50 Hz / 60 Hz			
Output AC (Back-up)				
Rated output power	5 kW	6 kW	8 kW	10 kW
Max. apparent output power	8 kVA, 60 sec	9.6 kVA, 60 sec	12.8 kVA, 60 sec	16 kVA, 60 sec
Back-up switch time	<10 ms			
Rated output voltage	3/N/PE, 380 V / 400 V			
Rated frequency	50 Hz / 60 Hz			
Rated output current	7.6 A / 7.2 A	9.1 A / 8.7 A	12.2 A / 11.5 A	15.2 A / 14.4 A
THDv (@linear load)	<2%			
Efficiency				
Max. efficiency	96.5%	97.0%	97.5%	97.9%
EU efficiency	96.8%	97.1%	97.4%	97.5%
BAT charged by PV Max. efficiency	98.4%	98.5%	98.2%	98.3%
BAT charged/discharged to AC Max. efficiency	97.3%	97.3%	97.5%	97.5%
Protection				
Anti-islanding protection	Yes			
Output over current protection	Yes			
Short circuit protection	Yes			
Integrated AFCI 2.0	Optional			
Integrated DC switch	Yes			
DC reverse-polarity protection	Yes			
PV over voltage protection	Yes			
Battery reverse protection	Yes			
General Data				
Dimensions (W*H*D)	600*500*210 mm		600*500*230 mm	
Weight	27.6 kg		30.2 kg	
Topology	Transformerless			
Self-consumption (night)	<25 W			
Operating ambient temperature range	-25 ~ +60°C			
Relative humidity	0-95%			
Ingress protection	IP66			
Cooling concept	Natural convection			
Max. operation altitude	4000 m			
Grid connection standard	G98 or G99, VDE-AR-N 4105 / VDE V 0124, EN 50549-1, VDE 0126 / UTE C 15/VFR:2019, RD 1699/RD 244 / UNE 206006 / UNE 206007-1, CEI 0-21, C10/11, NRS 097-2-1, TOR, EIFS 2018.2, IEC 62116, IEC 61727, IEC 60068, IEC 61683, EN 50530, MEA, PEA			
Safety/EMC standard	IEC/EN 62109-1/-2, IEC/EN 61000-6-1/-3			
Features				
PV connection	MC4 connector			
Battery connection	Quick connection plug			
AC connection	Quick connection plug			
Display	LED + Bluetooth + APP			
Communication	CAN, RS485, Optional: Wi-Fi, Cellular, LAN			

S6-EH3P(12-20)K-H

Solis Three Phase High Voltage Energy Storage Inverters

Features:

- Generator-compatible to extend backup duration during grid power outage
- Supports dual backup ports for intelligent control of critical and non-critical loads
- SG heat pump compatibility
- Supports a maximum input current of 20A, making it ideal for all high-power PV modules of any brand
- Supports AC voltage detection of grid and generator output to prevent damage to generators from reverse current from the grid
- Supports peak shaving features in "self-use" and "generator" modes
- Supports Unbalanced and Half-Wave Loads on both the Grid and Backup Port

Models:

S6-EH3P12K-H

S6-EH3P15K-H

S6-EH3P20K-H

DATASHEET

S6-EH3P(12-20)K-H

Models	12K	15K	20K
Input DC (PV side)			
Recommended max. PV array size	24 kW	30 kW	40 kW
Max. usable PV input power	19.2 kW	24 kW	32 kW
Max. input voltage		1000 V	
Rated voltage		600 V	
Start-up voltage		160 V	
MPPT voltage range		200-850 V	
Max. input current		20 A / 20 A / 20 A / 20 A	
Max. short circuit current		30 A / 30 A / 30 A / 30 A	
Max. input power per MPPT		9 kW	
MPPT number/Max. input strings number		4/4	
Battery			
Battery type		Li-ion	
Battery voltage range		120-800 V	
Max. charge / discharge power	12 kW	15 kW	20 kW
Max. charge / discharge current		50 A	
Communication		CAN/RS485	
Output AC (Grid side)			
Rated output power	12 kW	15 kW	20 kW
Max. apparent output power	12 kVA	15 kVA	20 kVA
Rated grid voltage		3/N/PE, 380 V / 400 V	
Rated grid frequency		50 Hz / 60 Hz	
Rated grid output current	18.2 A / 17.3 A	22.8 A / 21.7 A	30.4 A / 28.9 A
Max. output current	18.2 A / 17.3 A	22.8 A / 21.7 A	30.4 A / 28.9 A
Power factor		>0.99 (0.8 leading - 0.8 lagging)	
THDi		<3%	
Input AC (Grid side)			
Max. input power	18 kW	22.5 kW	30 kW
Rated input current	27.3 A / 26 A	34.2 A / 32.5 A	45.6 A / 43.3 A
Rated input voltage		3/N/PE, 380 V / 400 V	
Rated input frequency		50 Hz / 60 Hz	
Input Generator			
Max. input power	12 kW	15 kW	20 kW
Max. input current	18.2 A / 17.3 A	22.8 A / 21.7 A	30.4 A / 28.9 A
Rated input frequency		50 Hz / 60 Hz	
Output AC (Back-up)			
Rated output power	12 kW	15 kW	20 kW
Max. apparent output power	2 times of rated power, 10 s		1.6 time of rated power, 10 s
Back-up switch time		<10 ms	
Rated output voltage		3/N/PE, 380 V / 400 V	
Rated frequency		50 Hz / 60 Hz	
Rated output current	18.2 A / 17.3 A	22.8 A / 21.7 A	30.4 A / 28.9 A
THDv (@linear load)		<3%	
Efficiency			
Max. efficiency		97.7%	
EU efficiency		97.5%	
BAT charged by PV Max. efficiency		98.5%	
BAT charged/discharged to AC Max. efficiency		97.2%	
Protection			
Anti-islanding protection		Yes	
Output over current protection		Yes	
Short circuit protection		Yes	
Integrated AFCI 2.0		Optional	
Integrated DC switch		Yes	
DC reverse-polarity protection		Yes	
PV over voltage protection		Yes	
Battery reverse protection		Yes	
General Data			
Dimensions (W*H*D)		599*546*243 mm	
Weight	31 kg	31.7 kg	
Topology		Transformerless	
Self-consumption (night)		<25 W	
Operating ambient temperature range		-25 ~ +60°C	
Relative humidity		0-95%	
Ingress protection		IP66	
Cooling concept		Intelligent redundant fan-cooling	
Max. operation altitude		2000 m	
Grid connection standard		EN 50549-1, VDE4105 CEI 0-21, CEI 0-16, NC-RFG TypeB, NRS 097-2-1 ED 2.1	
Safety/EMC standard		IEC/EN 62109-1/-2, IEC/EN 61000-6-1/-3, IEC 61000-2	
Features			
PV connection		MC4 connector	
Battery connection		OT terminal	
AC connection		OT terminal	
Display		LCD + Bluetooth + APP	
Communication		CAN, RS485, Ethernet, Optional: Wi-Fi, Cellular, LAN	

Preliminary

S5-EA1P3K-L

Solis Single Phase Low Voltage AC-Coupled Inverters

Features:

- Compatible with lead-acid and lithium batteries, with multiple battery protection features
- Compatible with any existing grid-tied PV system, option to upgrade
- Intelligent debugging APP which support one-click inverter configuration
- Various work mode for different application scenario
- Natural cooling without external fan

Models:

S5-EA1P3K-L

360º View

DATASHEET S5-EA1P3K-L

Models	3K
Output AC (Grid side)	
Rated output power	3 kW
Max. output power	3 kW
Max. apparent output power	3 kVA
Operation phase	1/N/PE
Rated grid voltage	220 V / 230 V
Grid voltage range	184-264 V
Rated grid frequency	50 Hz / 60 Hz
Rated grid output current	13.6 A / 13 A
Max. output current	20 A
Power factor	>0.99 (0.8 leading - 0.8 lagging)
THDi	<3%
Battery	
Battery type	Li-ion / Lead-acid
Battery voltage range	40-60 V
Battery capacity	50-2000 Ah
Max. charge / discharge current	60 A
Communication	CAN
Input AC (Grid side)	
Rated input voltage	220 V / 230 V
Input voltage range	184-264 V
Max. input current	13.6 A / 13 A
Rated grid frequency	50 Hz / 60 Hz
Frequency range	45-55 Hz / 55-65 Hz
Efficiency	
Max. battery charge efficiency	94.0%
Max. battery discharge efficiency	94.5%
Protection	
Battery reverse protection	Yes
Battery over and under voltage protection	Yes
Short circuit protection	Yes
Output over current protection	Yes
Temperature protection	Yes
General Data	
Dimensions (W*H*D)	405*510*150 mm
Weight	12.1 kg
Topology	High frequency isolation
Operating ambient temperature range	-25 ~ +60°C
Ingress protection	IP65
Cooling concept	Natural convection
Max. operation altitude	2000 m
Grid connection standard	G98 or G99, VDE-AR-N 4105/VDE V 0124, EN 50549-1, VDE 0126/UTE C 15/VFR:2019, RD 1699/RD 244/UNE 206006/ UNE 206007-1, CEI 0-21, C10/11, NRS 097-2-1, TOR, EIFS 2018.2, IEC 62116, IEC 61727, IEC 60068, IEC 61683, MEA, PEA
Safety/EMC standard	IEC 62477, EN 61000-6-2/-3
Features	
DC connection	Screw terminal
AC connection	Screw clamp terminal (max. 6 mm^2)
Display	LCD
Communication	RS485, CAN, Optional: Wi-Fi, GPRS

S6-EA1P(3.6-6)K-L

Solis Single Phase Low Voltage AC-Coupled Inverters

Features:

- Supports six different battery charging and discharging TOU (Time of Use) settings to lower your electricity bill
- Supports general setting options for lithium batteries, suitable for non-communicating batteries
- Real-time battery monitoring, remote upgrade, and battery healing function to prolong battery life
- Supports peak shaving features in "self-use" and "generator" modes
- Facilitates low-power standby mode to minimize overall system power usage

Models:

S6-EA1P3.6K-L

S6-EA1P4.6K-L

S6-EA1P5K-L

S6-EA1P6K-L

DATASHEET

S6-EA1P(3.6-6)K-L

Models	3.6K	4.6K	5K	6K
Battery				
Battery type	Li-ion			
Battery voltage range	40-60 V			
Max. charge / discharge current	75 A	96 A	105 A	125 A
Communication	CAN			
Input AC (Grid side)				
Input voltage range	187-253 V			
Max. input current	16.4 A / 15.7 A	21 A / 20 A	22.8 A / 21.8 A	27.3 A / 26.1 A
Frequency range	45-55 Hz / 55-65 Hz			
Output AC (Grid side)				
Rated output power	3.6 kW	4.6 kW	5 kW	6 kW
Max. apparent output power	3.6 kVA	4.6 kVA	5 kVA	6 kVA
Operation phase	1/N/PE			
Rated grid voltage	220 V / 230 V			
Grid voltage range	187-253 V			
Rated grid frequency	50 Hz / 60 Hz			
Rated grid output current	16.4 A / 15.7 A	21 A / 20 A	22.8 A / 21.8 A	27.3 A / 26.1 A
Max. output current	16.4 A / 15.7 A	21 A / 20 A	22.8 A / 21.8 A	27.3 A / 26.1 A
Power factor	>0.99 (0.8 leading - 0.8 lagging)			
THDi	<3%			
Efficiency				
BAT charged/discharged to AC Max. efficiency	> 93.5%			
Protection				
Protection class	I			
Over voltage category	DC II / AC III			
Battery reverse protection	Yes			
Battery over and under voltage protection	Yes			
Short circuit protection	Yes			
Output over current protection	Yes			
Temperature protection	Yes			
General Data				
Dimensions (W*H*D)	440*465*192 mm			
Weight	19.9 kg			
Topology	High frequency isolation			
Operating ambient temperature range	-25 ~ +60℃			
Ingress protection	IP66			
Cooling concept	Natural convection			
Max. operation altitude	4000 m			
Grid connection standard	C10/11, 50549, G98, G99, VDE4105, AS4777.2, France			
Safety/EMC standard	IEC/EN 62109-1/-2, EN 61000-6-2/-3			
Features				
DC connection	Terminal Block			
AC connection	Quick connection plug			
Display	LED + APP			
Communication	RS485, CAN, Optional: Wi-Fi, LAN			

EVC-S1-1P7K-S, EVC-S1-3P22K-S

Solis EV Charger

Features:

- Supports various charging modes, including PV priority, scheduled charging, and price charging
- Supports load balancing, reducing reliance on grid energy
- Supports three charging authentication modes: card swipe, Bluetooth, and WiFi
- Compatible with all brands of electric vehicles
- Installation takes less than 15 minutes and supports wireless maintenance
- Imported Nord Pool pricing to schedule charging at the lowest price point

Models:

EVC-S1-1P7K-S

EVC-S1-3P22K-S

DATASHEET

EVC-S1-1P7K-S, EVC-S1-3P22K-S

Models	1P7K	3P22K
AC Input and Output		
Charge power (adjustable)	1.4~7.4 kW	1.4~22 kW
Rated voltage	230 V	400 V
Rated grid frequency	50 Hz / 60 Hz ± 1 Hz	
Max. current	32 A	
Charge connector	Type 2 tethered cable (7.3m) or type 2 socket (S-Socket, C-Cable)	
Number of charge connector	1	
Cable cross-section	Up to 10 mm^2	
Grid type	TN/TT/IT	TN/TT
Protection Devices		
Integrated fault detection	6 mA DC protection (EN 62955)	
Over/Under voltage protection	Yes	
Over load protection	Yes	
Over temperature protection	Yes	
Surge protection	II	
Over voltage category	II	
Interface & Communication		
Display	LED indicator	
Monitoring	SolisCloud	
Communication	LAN / Wi-Fi / BLE / RS485	
Protocol	Mode 3 (IEC 61851-1 compliant communication protocol)	
Authentication	APP / Plug&Charge / RFID	
Work mode	Normal Charging; Scheduled Charging; PV Power Preferred; Smart Electricity price charging	
MID meter	Optional	
Shutter	Optional	
CT	Optional	
General Data		
Dimensions (W*H*D)	206*364*148 mm	
Weight	3.5 kg	
Mounting method	Wall-Mounting	
Operating ambient temperature range	-30 ~ +50°C (1)	
Relative humidity	5 % - 95 %	
Ingress protection	IP54	
Cooling concept	Natural convection	
Max. operation altitude	2000 m	
Power consumption for standby	<8 W	
Certification	EN 61851-1 2019, IEC 62955:2018, IEC 61008-1 2010, IEC/EN 62196-1, UKCA	

(1) The parameter tested in lab, the actual value depends on the application scenario.

Preliminary

Off-grid Energy Storage Solutions

Solis EO series inverter is designed for residential off-grid systems in the countries without stable grid power, which can work with batteries to supply power to load and can also charge the batteries through PV plants, grid or generator.

The product has a variety of application scenarios combination modes, and can realize modular system assembly configuration according to needs. And can provide multiple products in parallel to form up to 30kW single-phase parallel operation system, which is very suitable for small industrial, commercial or residential energy storage projects.

Off-grid Energy Storage Solution - Single EO Inverter

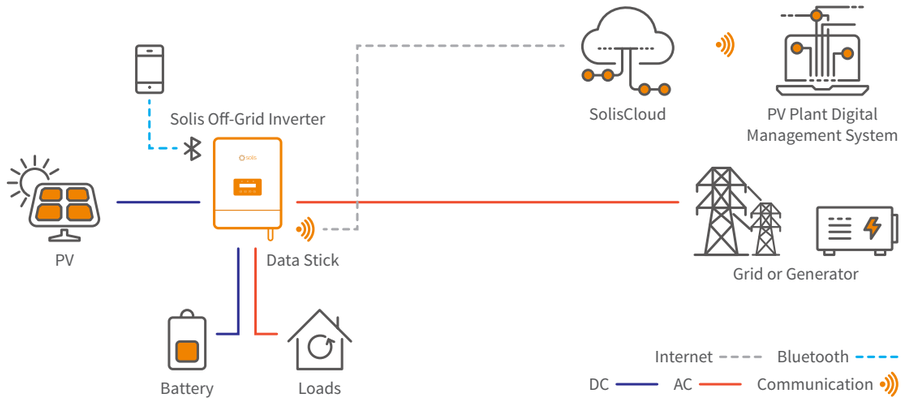

Off-grid Energy Storage Solution - Multiple Parallel EO Inverters

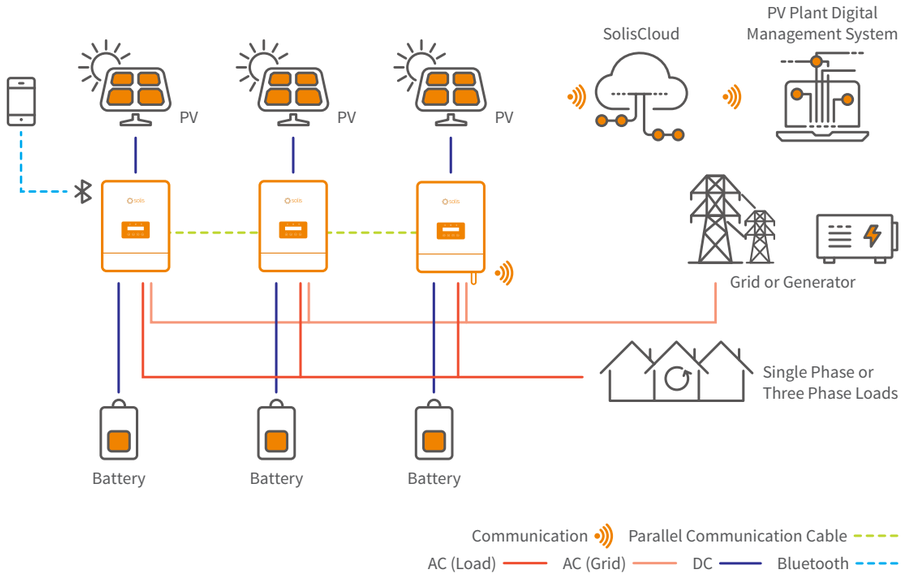

S6-EO1P(4-5)K-48-EU

Solis Single Phase Low Voltage Off-Grid Inverters

Features:

- Generator-compatible to extend backup duration during grid power outage
- Multiple inverters can operate together to form a microgrid
- Supports dual backup ports for intelligent control of critical and non-critical loads
- Supports six different battery charging and discharging TOU (Time of Use) settings to lower your electricity bill
- 10 seconds of 200% overload capability
- Supports general setting options for lithium batteries, suitable for non-communicating batteries

Models:

S6-EO1P4K-48-EU

S6-EO1P5K-48-EU

DATASHEET S6-EO1P(4-5)K-48-EU

Models	4K	5K
Solar Charger		
Max. usable PV input power	5.5 kW	6.5 kW
Max. input voltage	500 V	
Start-up voltage	90 V	
MPPT voltage range	90-430 V	
Max. input current	16 A / 16 A	
Max. short circuit current	40 A	
Max. solar charge current	100 A	
MPPT number/Max. input strings number	1/2	
Battery		
Battery type	Li-ion / Lead-acid	
Rated battery voltage	40-60 V	
Max. charge / discharge power	5 kW / 5 kW	
Max. charge / discharge current	100 A	
Communication	CAN	
Inverter Output		
Rated output power	4 kVA / 4 kW	5 kVA / 5 kW
Operation phase	L/N/PE	
Rated grid voltage	230 V ± 1%	
Rated grid frequency	50 Hz / 60 Hz ± 0.1%	
Surge capacity	8 kVA	10 kVA
Max. output current	20 A	25 A
Output voltage waveform	Pure sine wave	
Transfer time	10 ms typical, 20 ms Max	
THDv (@linear load)	<3%	
Peak efficiency (PV-AC)	96.6%	
AC Charger (grid port and generator port)		
Max. input power	6 kW	7 kW
Rated input voltage	L/N/PE, AC 230 V	
Selectable voltage range	90-280 V	
AC frequency range	50 Hz / 60 Hz	
Max. input current	26 A	30 A
Max. AC charge current	60 A	80 A
Protection		
Output over voltage protection	Yes	
Output over current protection	Yes	
Short circuit protection	Yes	
Surge protection	Yes	
Temperature protection	Yes	
Integrated AFCI 2.0	Optional	
General Data		
Dimensions (W*H*D)	340*495*170 mm	
Weight	14.1 kg	
Topology	High frequency non-isolation	
Relative humidity	5% - 95% (Non-condensing)	
Operating ambient temperature range	-10 ~ +60°C	
Storage temperature range	-25 ~ +60°C	
Ingress protection	IP21	
Max. operation altitude	2000 m	
Parallel capability	6 units	
Safety standard	IEC 62109, IEC 61000, 55011	
Features		
DC connection	Terminal connectors	
AC connection	Terminal connectors	
Display	LCD	
Communication	CAN, BMS, Dry-contact, Bluetooth, Optional: Wi-Fi	

Commercial Energy Storage Solutions

Solis commercial storage product S6-EH3P(30-50)K-H, is a highly integrated three-phase energy storage inverter, it has multiple functions, high safety level, strong energy supply reliability, which is a powerful tool for commercial PV energy storage projects.

It has 4 MPPT design, PV string current up to 20A, can be adapted to a variety of high-efficiency high-power PV module, to meet a variety of complex commercial roof application requirements; At the same time, the product can be compatible with a variety of generators can automatically control the generator start and stop, and support the generator port function expansion, to achieve backup loads redundancy or grid-tied PV system coupling networking; the product supports up to 6 parallel operation, and contains rich security protection and intelligent control operation functions, which is very suitable for small enterprises PV energy storage needs.

Models:	Output:
S6-EH3P(30-50)K-H	30 kW - 50 kW
S6-PV60K-M	
S6-TS3P(250-600)KAA-NV-ND	

Commercial Energy Storage Solution

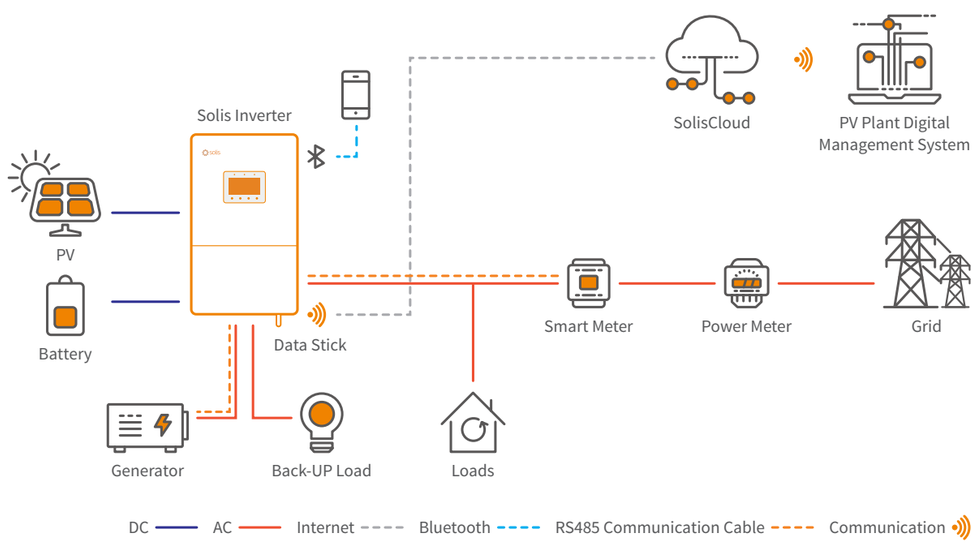

Commercial Energy Storage Solution (module)

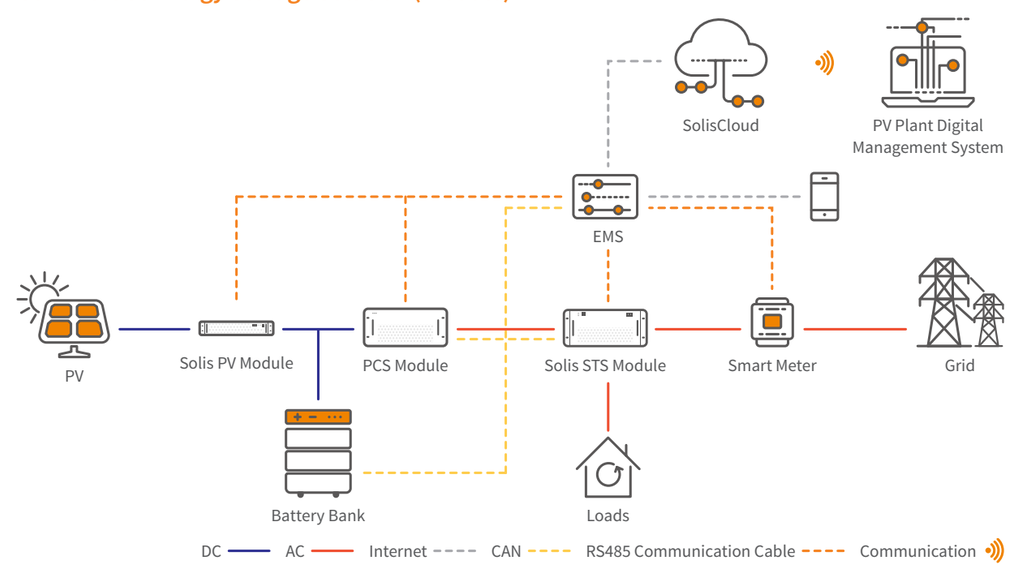

S6-EH3P(30-50)K-H

Solis Three Phase High Voltage Energy Storage Inverters

Features:

- 2 seconds of 160% overload capability
- Supports a maximum input current of 20 A, making it ideal for all high-power PV modules from any brand
- Battery real-time monitoring , remote upgrade, and battery healing function to prolong battery life
- Supports Peakshaving features in "self-use" and "generator" modes
- Supports Unbalanced and Half-Wave Loads on both the Grid and Backup Port
- A wide battery voltage range accommodates the prevalent high-voltage lithium batteries found in the market
- Battery charging/discharging current 140A/70A+70A, suitable for 280Ah cell standard 0.5C application condition
- Support 200% DC/AC ratio, make full use of PV charging, provide long backup hours

Models:

S6-EH3P30K-H

S6-EH3P40K-H

S6-EH3P50K-H

DATASHEET

S6-EH3P(30-50)K-H

Models	30K	40K	50K
Input DC (PV side)			
Recommended max. PV array size	60 kW	80 kW	100 kW
Max. usable PV input power	60 kW	80 kW	96 kW
Max. input voltage		1000 V	
Rated voltage		600 V	
Start-up voltage		180 V	
MPPT voltage range		150-850 V	
Max. input current	3*40 A	4*40 A	
Max. short circuit current	3*60 A	4*60 A	
MPPT number/Max. input strings number	3/6	4/8	
Battery			
Battery type		Li-ion	
Battery voltage range		150-800 V	
Max. charge / discharge power	33 kW	44 kW	55 kW
Max. charge / discharge current		70 A*2 (1)	
No. of battery inputs		2	
Max. charge / discharge power of each input	33 kW	35 kW	35 kW
Communication		CAN/RS485	
Output AC (Grid side)			
Rated output power	30 kW	40 kW	50 kW
Max. apparent output power	30 kVA	40 kVA	50 kVA
Rated grid voltage		3/N/PE, 220 V / 380 V, 230 V / 400 V	
Rated grid frequency		50 Hz / 60 Hz	
Rated grid output current	45.6 A / 43.3 A	60.8 A / 57.7 A	76 A / 72.2 A
Max. output current	45.6 A / 43.3 A	60.8 A / 57.7 A	76 A / 72.2 A
Power factor		>0.99 (0.8 leading - 0.8 lagging)	
THDi		< 3%	
Input AC (Grid side)			
Max. AC passthrough current	91.2 A / 86.6 A	121.6 A / 115.4 A	152 A / 144.4 A
Rated input voltage		3/N/PE, 220 V / 380 V, 230 V / 400 V	
Rated input frequency		50 Hz / 60 Hz	
Input Generator			
Max. input power	30 kW	40 kW	50 kW
Rated input current	45.6 A / 43.3 A	60.8 A / 57.7 A	76 A / 72.2 A
Rated input voltage		3/N/PE, 220 V / 380 V, 230 V / 400 V	
Rated input frequency		50 Hz / 60 Hz	
Output AC (Back-up)			
Rated output power	30 kW	40 kW	50 kW
Max. apparent output power		1.6 times of rated power, 2 s	
Back-up switch time		< 10 ms	
Rated output voltage		3/N/PE, 220 V / 380 V, 230 V / 400 V	
Rated frequency		50 Hz / 60 Hz	
Rated output current	45.6 A / 43.3 A	60.8 A / 57.7 A	76 A / 72.2 A
THDv (@linear load)		< 2%	
Efficiency			
Max. efficiency		97.8%	
EU efficiency		97.4%	
BAT charged by PV Max. efficiency		98.5%	
BAT charged/discharged to AC Max. efficiency		97.5%	
Protection			
Anti-islanding protection		Yes	
Output over current protection		Yes	
Short circuit protection		Yes	
Integrated DC switch		Yes	
DC reverse-polarity protection		Yes	
Surge protection		DC Type II / AC Type II	
Integrated AFCI 2.0		Optional	
General Data			
Dimensions (W*H*D)		530*880*290 mm	
Weight		73 kg	
Topology		Transformerless	
Self-consumption (night)		<35 W	
Operating ambient temperature range		-25 ~ +60°C	
Relative humidity		0-95%	
Ingress protection		IP66	
Cooling concept		Intelligent redundant fan-cooling	
Max. operation altitude		4000 m	
Grid connection standard		G99, VDE-AR-N 4105 / VDE V 0124, EN 50549-1/EN 50549-10, VDE 0126 / UTE C 15/VFR:2019, NTS 631/RD 1699/RD 244 / UNE 206006 / UNE 206007-1, CEI 0-21, C10/11, NRS 097-2-1, TOR, EIFS 2018.2, IEC 62116, IEC 61727, IEC 60068, IEC 61683, EN 50530, MEA, PEA,PORTARIA Nº 140, DE 21 DE MARÇO DE 2022	
Safety/EMC standard		IEC/EN 62109-1/-2, IEC/EN 61000-6-2/-4, EN 55011	
Features			
PV connection		MC4 Quick connection plug	
Battery connection		Terminal connector	
AC connection		Terminal Block	
Display		LCD + Bluetooth + APP	
Communication		CAN, RS485, Ethernet, Optional: Wi-Fi, Cellular, LAN	

(1) Supporting parallel 140A input.

S6-PV60K-M

Solis Energy Storage PV Module

Features:

- Max. efficiency 99.0%
- Wide string voltage range from 180V to 880V
- Supports different applications on DC-coupled systems
- Modular design and rack-mounted installation
- Supports control by PCS & EMS

Models:

S6-PV60K-M

DATASHEET

	S6-PV60K-M
Models	**60K**
Input DC (PV side)	
Input power	60 kW
Max. input voltage	1000 V
Rated voltage	500 V
Start-up voltage	200 V
MPPT voltage range	180-880 V
Full load MPPT voltage range	500-800 V
Max. input current	120 A
Output DC (Bus side)	
Max. output voltage	880 V
Working voltage range	650-880 V
Rated output current	92 A
Max. output current	100 A
Efficiency	
MPPT efficiency	>99.9%
Max. efficiency	99.0%
Protection	
Surge protection	ii (PV) / II (DC BUS)
Ground fault monitoring	Yes
Integrated PID recovery	Yes
DC reverse-polarity protection	Yes
Protection class/Over voltage category	I/II
General Data	
Dimensions (W*H*D)	440*88*550 mm
Weight	23 kg
Operating ambient temperature range	-25 ~ +60°C
Ingress protection	IP 20
Cooling concept	Intelligent redundant fan-cooling
Max. operation altitude	4000 m
Safety standard	IEC 62109
Features	
DC connection	OT terminal
AC connection	OT terminal
Display	LED
Communication	CAN, RS485

Preliminary

S6-TS3P(250-600)KAA-NV-ND

Solis Energy Storage STS Module

Features:

- Max. efficiency 99.0%
- Switch time between on-grid and off-grid ≤ 10 ms
- Supports 1.1 times long-term overload

Models:

S6-TS3P250KAA-NV-ND

S6-TS3P600KAA-NV-ND

DATASHEET S6-TS3P(250-600)KAA-NV-ND

Models	250K	600K
Electrical Data		
Rated power	250 kW	600 kW
Rated current	375 A	900 A
Rated voltage	380 V / 400 V	
Voltage range	380 V / 400 V ± 15%	
Rated frequency	50 Hz / 60 Hz	
Frequency range	50 Hz / 60 Hz ± 5	
Long-term overload	110%	
Max. apparent power	160%, 2 s	
Switch time	≤10 ms	
Max. efficiency	99%	
General Data		
Dimensions (W*H*D)	484*232*500 mm	
Weight	30 kg	40 kg
Operating ambient temperature range	-25 ~ 60°C (<50°C, no derating)	
Storage temperature range	-40 ~ +70°C	
Relative humidity	0~95%	
Ingress protection	IP20	
Wiring method	3P3W	
Cooling concept	Intelligent redundant fan-cooling	
Max. operation altitude	4000 m (<2000 m, no derating)	
Protection		
Over voltage category	II	
Over current protection	Yes	
Feature		
AC connection	Copper Bar	
Display	LED	
Communication	RS485*2, CAN*2, DI/DO*4	

Preliminary

Residential Solar PV Solutions

Solis residential string inverters are cost-effective and efficient green power leaders, providing smarter green power solutions for your residential buildings. A variety of models and solutions meet the needs of modern homes.

The portfolio includes single-phase and small three-phase string inverters, with a wide range of models, providing the best home green power solutions based on your application scenarios and specific needs.
Solis Residential inverters are small and light, allowing for just one person to complete the installation. The overall design is sleek and modern, with low noise, particularly suitable for home installation without affecting people's daily activities.
Via online or App, you can connect to SolisCloud for intelligent energy management. Simple operation and convenient.
Solis residential solutions are technically advanced, flexible and simplify integration with digital home automation equipment and smart grids.

Residential Solar PV Solution

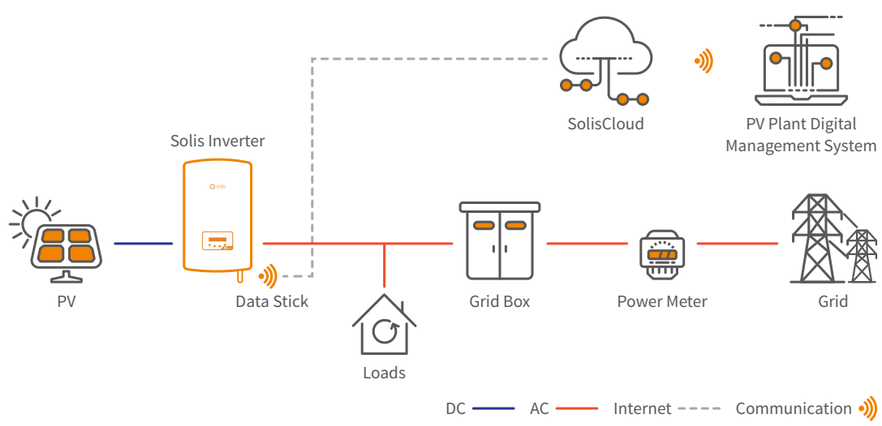

Models:

S6-GR1P(0.7-3.6)K-M / S6-GR1P(2.5-6)K
S6-GR1P(2.5-6)K-S / S6-GR1P(7-8)K2
S5-GR3P(3-20)K

Output:

0.7 kW - 20 kW

S6-GR1P(0.7-3.6)K-M

Solis Single Phase Grid-Tied Inverters

Features:

- Max. efficiency 97.3%
- String current up to 14A
- Super high frequency switching technology
- Wide voltage range and low startup voltage
- Precise MPPT algorithm
- Integrated Export Power Manager (EPM)
- AFCI protection, proactively reduces fire risk
- Compact and lightweight
- Friendly and adaptable connection to the grid

Models:

S6-GR1P0.7K-M / S6-GR1P1K-M

S6-GR1P1.5K-M / S6-GR1P2K-M

S6-GR1P2.5K-M / S6-GR1P3K-M

S6-GR1P3.6K-M

360º View

DATASHEET

S6-GR1P(0.7-3.6)K-M

Models	0.7K	1K	1.5K	2K	2.5K	3K	3.6K
Input DC							
Recommended max. PV power	1.1 kW	1.5 kW	2.3 kW	3 kW	3.8 kW	4.5 kW	5.4 kW
Max. input voltage	550 V						
Rated voltage	200 V			330 V			
Start-up voltage	60 V			90 V			
MPPT voltage range	50-500 V			80-500 V			
Max. input current	14 A						19 A
Max. short circuit current	22 A						24 A
MPPT number/Max. input strings number	1/1						1/2
Output AC							
Rated output power	0.7 kW	1 kW	1.5 kW	2 kW	2.5 kW	3 kW	3.6 kW
Max. apparent output power	0.77 kVA	1.1 kVA	1.65 kVA	2.2 kVA	2.75 kVA	3.3 kVA	3.6 kVA
Max. output power	0.77 kW	1.1 kW	1.65 kW	2.2 kW	2.75 kW	3.3 kW	3.6 kW
Rated grid voltage	1/N/PE, 220 V / 230 V						
Rated grid frequency	50 Hz / 60 Hz						
Rated grid output current	3.2 A / 3.0 A	4.5 A / 4.3 A	6.8 A / 6.5 A	9.1 A / 8.7 A	11.4 A / 10.9 A	13.6 A / 13 A	16 A
Max. output current	4.4 A	5.2 A	8.1 A	10.5 A	13.3 A	15.7 A	16 A
Power factor	>0.99 (0.8 leading - 0.8 lagging)						
THDi	<3%						
Efficiency							
Max. efficiency	96.6%		96.6%	97.1%	97.1%		97.3%
EU efficiency	95.3%		95.4%	96.4%	96.7%		96.8%
Protection							
DC reverse-polarity protection	Yes						
Short circuit protection	Yes						
Output over current protection	Yes						
Surge protection	Yes						
Grid monitoring	Yes						
Anti-islanding protection	Yes						
Temperature protection	Yes						
Integrated AFCI 2.0	Optional						
Integrated DC switch	Yes						
General Data							
Dimensions (W*H*D)	310*373*160 mm						
Weight	7.4 kg				7.7 kg		
Topology	Transformerless						
Self-consumption (night)	<1 W						
Operating ambient temperature range	-25 ~ +60°C						
Relative humidity	0-100%						
Ingress protection	IP66						
Noise emission (typical)	<20 dB(A)						
Cooling concept	Natural convection						
Max. operation altitude	4000 m						
Grid connection standard	G98 or G99, VDE-AR-N 4105 / VDE V 0124, EN 50549-1, VDE 0126 / UTE C 15 / VFR:2019, RD 1699 / RD 244 / UNE 206006 / UNE 206007-1, CEI 0-21, C10/11, NRS 097-2-1, EIFS 2018.2, IEC 62116, IEC 61727, IEC 60068, IEC 61683, EN 50530, MEA, PEA						
Safety/EMC standard	IEC/EN 62109-1/-2, IEC/EN 61000-6-1/-2/-3/-4						
Features							
DC connection	MC4 connector						
AC connection	Quick connection plug						
Display	LCD						
Communication	RS485, Optional: Wi-Fi, GPRS						

S6-GR1P(2.5-6)K

Solis Single Phase Grid-Tied Inverters

Features:

- Max. efficiency 97.7%
- String current up to 14A
- Super high frequency switching technology
- Wide voltage range and low startup voltage
- 2 MPPT design with precise MPPT algorithm
- Integrated Export Power Manager (EPM)
- AFCI protection, proactively reduces fire risk
- Compact and lightweight
- Friendly and adaptable connection to the grid

Models:

S6-GR1P2.5K / S6-GR1P3K

S6-GR1P3.6K / S6-GR1P4K

S6-GR1P4.6K / S6-GR1P5K

S6-GR1P6K

360º View

DATASHEET

S6-GR1P(2.5-6)K

Models	2.5K	3K	3.6K	4K	4.6K	5K	6K
Input DC							
Recommended max. PV power	3.75 kW	4.5 kW	5.4 kW	6 kW	6.9 kW	7.5 kW	9 kW
Max. input voltage	550 V	600 V					
Rated voltage	250 V	330 V					
Start-up voltage	60 V	120 V					
MPPT voltage range	50-450 V	90-520 V					
Max. input current	14 A / 14 A						
Max. short circuit current	22 A / 22 A						
MPPT number/Max. input strings number	2/2						
Output AC							
Rated output power	2.5 kW	3 kW	3.6 kW	4 kW	4.6 kW	5 kW	6 kW
Max. apparent output power	2.8 kVA	3.3 kVA	4 kVA	4.4 kVA	5 kVA	5 kVA	6 kVA
Max. output power	2.8 kW	3.3 kW	4 kW	4.4 kW	5 kW	5 kW	6 kW
Rated grid voltage	1/N/PE, 220 V / 230 V						
Rated grid frequency	50 Hz / 60 Hz						
Rated grid output current	11.4 A / 10.9 A	13.6 A / 13.0 A	16.0 A / 15.7 A	18.2 A / 17.4 A	20.9 A / 20.0 A	22.7 A / 21.7 A	27.3 A
Max. output current	13.3 A	15.7 A	16.0 A	21.0 A	23.8 A	25.0 A	27.3 A
Power factor	>0.99 (0.8 leading - 0.8 lagging)						
THDi	<3%						
Efficiency							
Max. efficiency	97.3%	97.3%		97.6%		97.7%	
EU efficiency	96.5%	96.6%		97.1%		97.1%	
Protection							
DC reverse-polarity protection	Yes						
Short circuit protection	Yes						
Output over current protection	Yes						
Surge protection	Yes						
Grid monitoring	Yes						
Anti-islanding protection	Yes						
Temperature protection	Yes						
Integrated AFCI	Yes (1)						
Integrated DC switch	Yes						
General Data							
Dimensions (W*H*D)	310*543*160 mm						
Weight	11 kg	11.2 kg		12 kg			
Topology	Transformerless						
Self-consumption (night)	<1 W						
Operating ambient temperature range	-25 ~ +60°C						
Relative humidity	0-100%						
Ingress protection	IP66						
Noise emission (typical)	<20 dB(A)						
Cooling concept	Natural convection						
Max. operation altitude	4000 m						
Grid connection standard	G98 (2) or G99, VDE-AR-N 4105 / VDE V 0124, EN 50549-1, VDE 0126 / UTE C 15 / VFR:2019, RD 1699 / RD 244 / UNE 206006 / UNE 206007-1, CEI 0-21, C10/11, NRS 097-2-1, EIFS 2018.2, IEC 62116, IEC 61727, IEC 60068, IEC 61683, EN 50530, MEA, PEA						
Safety/EMC standard	IEC/EN 62109-1/-2, IEC/EN 61000-6-2/-3						
Features							
DC connection	MC4 connector						
AC connection	Quick connection plug						
Display	LCD						
Communication	RS485, Optional: Wi-Fi, GPRS						

(1) Activation required. (2) G98 for 2.5K-3.6K.

S6-GR1P(2.5-6)K-S

Solis Single Phase Grid-Tied Inverters

Features:

- String current up to 16A
- Integrated with zero export power control function
- Light weight with compact design for easy installation
- 2 MPPT design with precise MPPT algorithm

Models:

S6-GR1P2.5K-S / S6-GR1P3K-S

S6-GR1P3.6K-S / S6-GR1P4K-S

S6-GR1P4.6K-S / S6-GR1P5K-S

S6-GR1P6K-S

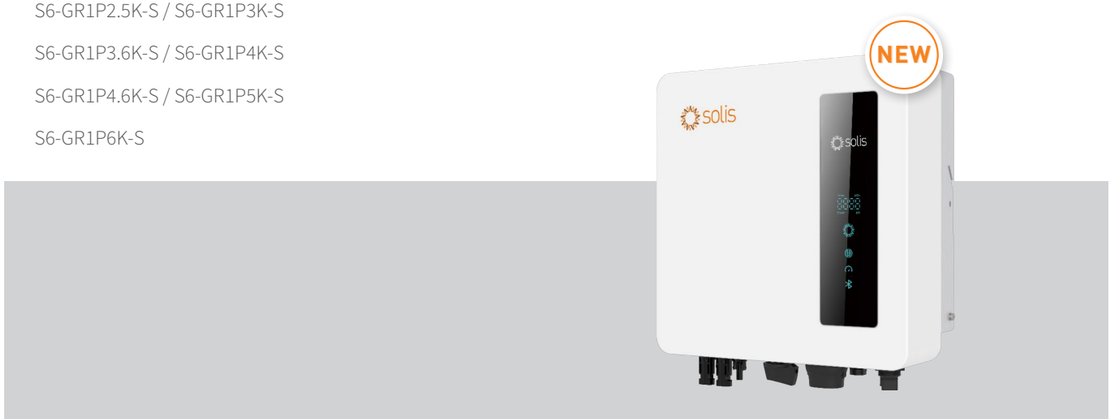

DATASHEET

S6-GR1P(2.5-6)K-S

Models	2.5K	3K	3.6K	4K	4.6K	5K	6K
Input DC							
Recommended max. PV power	3.75 kW	4.5 kW	5.4 kW	6 kW	6.9 kW	7.5 kW	9 kW
Max. input voltage	550 V						
Rated voltage	250 V	330 V					
Start-up voltage	60 V	100 V					
MPPT voltage range	50-550 V	90-550 V					
Max. input current	16 A / 16 A						
Max. short circuit current	22 A / 22 A						
MPPT number/Max. input strings number	2/2						
Output AC							
Rated output power	2.5 kW	3 kW	3.6 kW	4 kW	4.6 kW	5 kW	6 kW
Max. apparent output power	2.5 kVA	3 kVA	3.6 kVA	4 kVA	4.6 kVA	5 kVA	6 kVA
Max. output power	2.5 kW	3 kW	3.6 kW	4 kW	4.6 kW	5 kW	6 kW
Rated grid voltage	1/N/PE, 220 V / 230 V						
Rated grid frequency	50 Hz / 60 Hz						
Rated grid output current	11.4 A / 10.9 A	13.6 A / 13 A	16 A / 15.7 A	18.2 A / 17.4 A	20.9 A / 20 A	22.7 A / 21.7 A	27.3 A / 26.1 A
Max. output current	11.4 A	13.6 A	16 A	18.2 A	20.9 A	22.7 A	27.3 A
Power factor	>0.99 (0.8 leading - 0.8 lagging)						
THDi	<3%						
Efficiency							
Max. efficiency	97.3%	97.3%		97.6%		97.7%	
EU efficiency	96.5%	96.6%		97.1%		97.1%	
Protection							
DC reverse-polarity protection	Yes						
Short circuit protection	Yes						
Output over current protection	Yes						
Surge protection	Yes						
Grid monitoring	Yes						
Anti-islanding protection	Yes						
Temperature protection	Yes						
Integrated AFCI 2.0	Optional						
Integrated DC switch	Yes						
General Data							
Dimensions (W*H*D)	330*371*161 mm						
Weight	8.2 kg	8.3 kg		8.9 kg			9 kg
Topology	Transformerless						
Self-consumption (night)	<1 W						
Operating ambient temperature range	-25 ~ +60°C						
Relative humidity	0-100%						
Ingress protection	IP66						
Noise emission (typical)	<20 dB(A)						
Cooling concept	Natural convection						
Max. operation altitude	4000 m						
Grid connection standard	G98 or G99, VDE-AR-N 4105 / VDE V 0124, EN 50549-1, VDE 0126 / UTE C 15 / VFR:2019, RD 1699 / RD 244 / UNE 206006 / UNE 206007-1, CEI 0-21, C10/11, NRS 097-2-1, EIFS 2018.2, IEC 62116, IEC 61727, IEC60068, IEC 61683, EN 50530, MEA, PEA						
Safety/EMC standard	IEC/EN 62109-1/-2, IEC/EN 61000-6-2/-3						
Features							
DC connection	MC4 connector						
AC connection	Quick connection plug						
Display	LED + APP						
Communication	RS485, USB, Optional: Wi-Fi, GPRS						

S6-GR1P(7-8)K2

Solis Single Phase Grid-Tied Inverters

Features:

- Max. efficiency 97.7%
- String current up to 18A/32A
- Wide voltage range and low startup voltage
- 2 MPPT design with precise MPPT algorithm
- Integrated Export Power Manager (EPM)
- AFCI protection, proactively reduces fire risk
- Compact and lightweight
- Friendly and adaptable connection to the grid

Models:

S6-GR1P7K2

S6-GR1P8K2

DATASHEET S6-GR1P(7-8)K2

Models	7K	8K
Input DC		
Recommended max. PV power	10.5 kW	12 kW
Max. input voltage	550 V	
Rated voltage	330 V	
Start-up voltage	90 V	
MPPT voltage range	90-500 V	
Max. input current	18 A / 32 A	
Max. short circuit current	20 A / 40 A	
MPPT number/Max. input strings number	2/3	
Output AC		
Rated output power	7 kW	8 kW
Max. apparent output power	7 kVA	8 kVA
Max. output power	7 kW	8 kW
Rated grid voltage	1/N/PE, 220 V / 230 V	
Rated grid frequency	50 Hz / 60 Hz	
Rated grid output current	31.8 A / 30.4 A	36.4 A / 34.8 A
Max. output current	31.8 A	36.4 A
Power factor	>0.99 (0.8 leading - 0.8 lagging)	
THDi	<3%	
Efficiency		
Max. efficiency	97.7%	
EU efficiency	96.8%	
Protection		
DC reverse-polarity protection	Yes	
Short circuit protection	Yes	
Output over current protection	Yes	
Surge protection	Yes	
Grid monitoring	Yes	
Anti-islanding protection	Yes	
Temperature protection	Yes	
Integrated AFCI 2.0	Optional	
Integrated DC switch	Yes	
General Data		
Dimensions (W*H*D)	310*550*180 mm	
Weight	13.2 kg	
Topology	Transformerless	
Self-consumption (night)	<1 W	
Operating ambient temperature range	-25 ~ +60°C	
Relative humidity	0-100%	
Ingress protection	IP66	
Noise emission (typical)	<40 dB(A)	
Cooling concept	Natural convection	
Max. operation altitude	4000 m	
Grid connection standard	EN 50549-1, IEC 62116, IEC 61727, IEC60068, IEC 61683, EN 50530	
Safety/EMC standard	IEC/EN 62109-1/-2, IEC/EN 61000-6-1/-2/-3/-4	
Features		
DC connection	MC4 connector	
AC connection	Quick connection plug	
Display	LCD	
Communication	RS485, Optional: Wi-Fi, GPRS	

S5-GR3P(3-20)K

Solis Three Phase Grid-Tied Inverters

Efficient

- Max. efficiency 98.7%
- String current up to 16A
- Wide voltage range and low startup voltage

Safe

- IP66
- AFCI protection, proactively reduces fire risk
- Automatic voltage stabilization technology in weak grid conditions

Smart

- Supports export power control
- Supports RS485, WiFi, GPRS
- Scan to register on SolisCloud, supports remote upgrade and control

Economic

- Compact design, simple installation and maintenance
- > 150% DC/AC ratio
- Supports high power modules for lower installation costs

Models:

S5-GR3P3K / S5-GR3P4K

S5-GR3P5K / S5-GR3P6K

S5-GR3P8K / S5-GR3P9K

S5-GR3P10K / S5-GR3P12K

S5-GR3P13K / S5-GR3P15K

S5-GR3P17K / S5-GR3P20K

360º View

DATASHEET

S5-GR3P(3-20)K

Models	3K	4K	5K	6K	8K	9K	10K	12K	13K	15K	17K	20K
Input DC												
Recommended max. PV power	4.5 kW	6 kW	7.5 kW	9 kW	12 kW	13.5 kW	15 kW	18 kW	19.5 kW	22.5 kW	25.5 kW	30 kW
Max. input voltage	1100 V											
Rated voltage	600 V											
Start-up voltage	180 V											
MPPT voltage range	160-1000 V											
Max. input current	16 A / 16 A							32 A / 32 A				
Max. short circuit current	20 A / 20 A							40 A / 40 A				
MPPT number/Max. input strings number	2/2							2/4				
Output AC												
Rated output power	3 kW	4 kW	5 kW	6 kW	8 kW	9 kW	10 kW	12 kW	13 kW	15 kW	17 kW	20 kW
Max. apparent output power	3.3 kVA	4.4 kVA	5.5 kVA	6.6 kVA	8.8 kVA	9.9 kVA	11 kVA	13.2 kVA	14.3 kVA	16.5 kVA	18.7 kVA	22 kVA
Max. output power	3.3 kW	4.4 kW	5.5 kW	6.6 kW	8.8 kW	9.9 kW	11 kW	13.2 kW	14.3 kW	16.5 kW	18.7 kW	22 kW
Rated grid voltage	3/N/PE, 220 V / 380 V, 230 V / 400 V											
Rated grid frequency	50 Hz / 60 Hz											
Rated grid output current	4.6 A / 4.3 A	6.1 A / 5.8 A	7.6 A / 7.2 A	9.1 A / 8.7 A	12.2 A / 11.5 A	13.7 A / 13.0 A	15.2 A / 14.4 A	18.2 A / 17.3 A	19.8 A / 18.8 A	22.8 A / 21.7 A	25.8 A / 24.6 A	30.4 A / 28.9 A
Max. output current	4.7 A	6.4 A	7.9 A	9.5 A	12.7 A	14.3 A	15.9 A	19.1 A	20.7 A	23.8 A	27 A	31.8 A
Power factor	>0.99 (0.8 leading - 0.8 lagging)											
THDi	<2%											
Efficiency												
Max. efficiency	98.3%				98.5%			98.6%			98.7%	
EU efficiency	97.7%				97.9%			98.0%			98.1%	
Protection												
DC reverse-polarity protection	Yes											
Short circuit protection	Yes											
Output over current protection	Yes											
Surge protection	Yes											
Grid monitoring	Yes											
Anti-islanding protection	Yes											
Temperature protection	Yes											
Integrated AFCI 2.0	Optional											
Integrated DC switch	Yes											
General Data												
Dimensions (W*H*D)	310*563*219 mm											
Weight	16.5 kg		16.9 kg		17.9 kg			19.6 kg			20.8 kg	
Topology	Transformerless											
Self-consumption (night)	<1 W											
Operating ambient temperature range	-25 ~ +60°C											
Relative humidity	0-100%											
Ingress protection	IP66											
Noise emission (typical)	<30 dB(A)							<60 dB(A)				
Cooling concept	Natural convection							Intelligent redundant fan-cooling				
Max. operation altitude	4000 m											
Grid connection standard	G99, VDE-AR-N 4105 / VDE V 0124, EN 50549-1, VDE 0126 / UTE C 15 / VFR:2019, RD 1699 / RD 244 / UNE 206006 / UNE 206007-1, CEI 0-21, C10/11, NRS 097-2-1, EIFS 2018.2, IEC 62116, IEC 61727, IEC 60068, IEC 61683, EN 50530											
Safety/EMC standard	IEC/EN 62109-1/-2, IEC/EN 61000-6-1/-2/-3/-4											
Features												
DC connection	MC4 connector											
AC connection	Quick connection plug											
Display	LCD											
Communication	RS485, Optional: Wi-Fi, GPRS											

Residential Power Plant Case Study

Microgrid Project in Hebei Province

This microgrid project in Hebei province uses Solis-3P(12-25)K-5G and Solis-(25-50)K-5G inverters. Through the configuration of an energy storage system, the project adopts the mode of "Self-use, surplus electricity exoported & sold back to the grid". This has realized consumption of new green energy to the region and delivers a stable income of about 1.6 million yuan annually.

In addition, the system is monitored in real-time via the SolisCloud platform which offers intelligent digital functions, online system control,along with accurate operation and maintenance. This in turn makes power station management more eficient, convenient and cost effective.

This project demonstrates the technological progress and expansion of the solar industry, accelerating the development of clean, low-carbon energy.

Finland
6.7kW S5-GR3P(3-20)K

USA
16kW Solis-(2.5-6)K-4G-US

Australia
8.2kW Solis-1P(2.5-6)K-4G

UK
2.8kW S6-GR1P(2.5-6)K

China
2.7MW
GCI-3P(12-25)K-5G

Commercial & Industrial Solar PV Solutions

Solis industrial and commercial string inverter product line is rich, the power range covers 25kW - 150kW, no matter how large your design and requirements are, we can rely on our flexible products to provide you with the best industry green power solutions.

Solis provides the most extensive industrial and commercial string inverter products on the market, and the products are sold well in various countries and regions in the world. They perform well in various harsh and complex environments, and are very stable and reliable.
Solis' C&I products are compatible with modularity and flexibility in program design. From the perspective of inverter performance improvement, we provide an ideal solution for simplifying system planning and design. Including optimizing software algorithms, optimizing hardware port compatibility, etc., to improve system efficiency and reduce system investment costs.
The power range of Solis' C&I products covers a wide range, with a single power up to 150kW. High-efficiency and high-power-density inverters can reduce installation and maintenance workloads and improve overall cost efficiency.
Solis' C&I solutions are supplemented by a series of advanced digital services based on SolisCloud, simplifying the application difficulty of intelligent systems, and providing you with more complete, high-quality and efficient cloud intelligent operation and maintenance solutions.

Models: S5-GC(25-40)K / S6-GC3P(25-36)K03-NV-ND
S5-GC(50-60)K / S6-GC3P(40-60)K-NV-ND
Solis-(80-110)K-5G-PRO / S5-GC80K
S5-GC(100-110)K / S6-GC(100-125)K
S6-GC3P(125-150)K12-NV-ND

Output: 25kW - 150kW

Commercial & Industrial Solar PV Solution

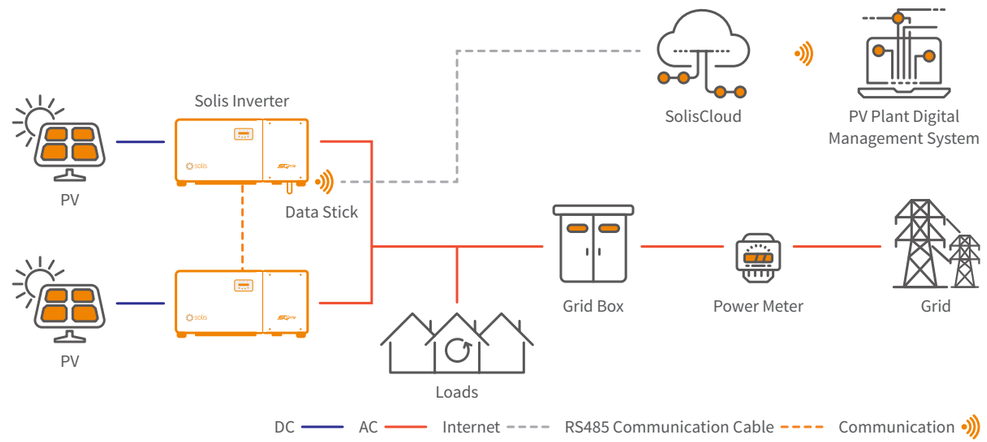

S5-GC(25-40)K

Solis Three Phase Grid-Tied Inverters

Efficient

- Max. efficiency 98.7%
- String current up to 16A
- 3/4 MPPT design, supports multiple orientation system design
- Night time PID recovery function, increases overall system yield (optional)
- Wide voltage range and low startup voltage

Safe

- IP66
- AFCI protection, proactively reduces fire risk
- Globally recognised branded componentry for longer life
- Intelligent redundant fan-cooling

Smart

- Supports export power control
- Intelligent string monitoring, smart I-V curve scan
- Supports RS485, WiFi, GPRS
- Scan to register on SolisCloud, supports remote upgrade and control

Economic

- Supports GPRS/WiFi communication with less wiring and reduced installation costs
- > 150% DC/AC ratio
- Supports high power modules for lower installation costs

Models:

S5-GC25K / S5-GC30K

S5-GC33K / S5-GC36K

S5-GC40K

360° View

DATASHEET

S5-GC(25-40)K

Models	25K	30K	33K	36K	40K
Input DC					
Recommended max. PV power	37.5 kW	45 kW	49.5 kW	54 kW	60 kW
Max. input voltage	1100 V				
Rated voltage	600 V				
Start-up voltage	180 V				
MPPT voltage range	200-1000 V				
Max. input current	32 A / 32 A / 32 A			4*32 A	
Max. short circuit current	40 A / 40 A / 40 A			4*40 A	
MPPT number/Max. input strings number	3/6			4/8	
Output AC					
Rated output power	25 kW	30 kW	33 kW	36 kW	40 kW
Max. apparent output power	27.5 kVA	33 kVA	36.3 kVA	39.6 kVA	44 kVA
Max. output power	27.5 kW	33 kW	36.3 kW	39.6 kW	44 kW
Rated grid voltage	3/N/PE, 220 V / 380 V, 230 V / 400 V				
Rated grid frequency	50 Hz / 60 Hz				
Rated grid output current	38.0 A / 36.1 A	45.6 A / 43.3 A	50.1 A / 47.6 A	54.7 A / 52.0 A	60.8 A / 57.7 A
Max. output current	41.8 A	50.2 A	55.1 A	60.2 A	66.9 A
Power factor	>0.99 (0.8 leading - 0.8 lagging)				
THDi	<3%				
Efficiency					
Max. efficiency	98.5%		98.6%	98.7%	
EU efficiency	98.1%		98.2%	98.3%	
Protection					
DC reverse-polarity protection	Yes				
Short circuit protection	Yes				
Output over current protection	Yes				
Surge protection	DC Type II / AC Type II				
Grid monitoring	Yes				
Anti-islanding protection	Yes				
Temperature protection	Yes				
Strings monitoring	Yes				
I/V Curve scanning	Yes				
Integrated AFCI 2.0	Optional				
Integrated PID recovery	Optional				
Integrated DC switch	Yes				
General Data					
Dimensions (W*H*D)	647*629*252 mm				
Weight	38.2 kg			42.1 kg	
Topology	Transformerless				
Self-consumption (night)	<1 W				
Operating ambient temperature range	-25 ~ +60°C				
Relative humidity	0-100%				
Ingress protection	IP66				
Noise emission (typical)	≤60 dB(A)				
Cooling concept	Intelligent redundant fan-cooling				
Max. operation altitude	4000 m				
Grid connection standard	G99, VDE-AR-N 4105 / VDE V 0124, EN 50549-1, VDE 0126 / UTE C 15 / VFR:2019, RD 1699 / RD 244 / UNE 206006 / UNE 206007-1, CEI 0-21, C10/11, NRS 097-2-1, EIFS 2018.2, IEC 62116, IEC 61727, IEC60068, IEC 61683, EN 50530				
Safety/EMC standard	IEC/EN 62109-1/-2, IEC/EN 61000-6-1/-2/-3/-4				
Features					
DC connection	MC4 connector				
AC connection	OT terminal				
Display	LCD				
Communication	RS485, Optional: Wi-Fi, GPRS				

S6-GC3P(25-36)K03-NV-ND

Solis Three Phase Grid-Tied Inverters

Features:

- Max. efficiency 98.5%
- String current up to 20A
- > 150% DC/AC ratio, supports high power modules
- Automatic voltage stabilization technology in weak grid conditions
- AFCI protection, proactively reduces fire risk
- Supports RS485/ WiFi/GPRS/4G
- Scan to register on SolisCloud, supports remote upgrade and control

Models:

S6-GC3P25K03-NV-ND

S6-GC3P30K03-NV-ND

S6-GC3P33K03-NV-ND

S6-GC3P36K03-NV-ND

DATASHEET S6-GC3P(25-36)K03-NV-ND

Models	25K	30K	33K	36K
Input DC				
Recommended max. PV power	37.5 kW	45 kW	49.5 kW	54 kW
Max. input voltage	1100 V			
Rated voltage	600 V			
Start-up voltage	180 V			
MPPT voltage range	180-1000 V			
Max. input current	40 A / 40 A / 40 A			
Max. short circuit current	50 A / 50 A / 50 A			
MPPT number/Max. input strings number	3/6			
Output AC				
Rated output power	25 kW	30 kW	33 kW	36 kW
Max. apparent output power	25 kVA	30 kVA	33 kVA	36 kVA
Max. output power	25 kW	30 kW	33 kW	36 kW
Rated grid voltage	3/N/PE, 220 V / 380 V, 230 V / 400 V			
Rated grid frequency	50 Hz / 60 Hz			
Rated grid output current	38.0 A / 36.1 A	45.6 A / 43.3 A	50.1 A / 47.6 A	54.7 A / 52 A
Max. output current	38.0 A / 36.1 A	45.6 A / 43.3 A	50.1 A / 47.6 A	54.7 A / 52 A
Power factor	>0.99 (0.8 leading - 0.8 lagging)			
THDi	<3%			
Efficiency				
Max. efficiency	98.5%			
EU efficiency	98%			
Protection				
DC reverse-polarity protection	Yes			
Short circuit protection	Yes			
Output over current protection	Yes			
Surge protection	DC Type II / AC Type II			
Grid monitoring	Yes			
Anti-islanding protection	Yes			
Temperature protection	Yes			
Strings monitoring	Yes			
I/V Curve scanning	Yes			
Multi peak scan	Yes			
Integrated AFCI 2.0	Optional			
Integrated DC switch	Yes			
General Data				
Dimensions (W*H*D)	420*680*330 mm			
Weight	25.3 kg	25.5 kg	26.5 kg	
Topology	Transformerless			
Self-consumption (night)	<1 W			
Operating ambient temperature range	-25 ~ +60°C			
Relative humidity	0-100%			
Ingress protection	IP66			
Noise emission (typical)	≤60 dB(A)			
Cooling concept	Intelligent redundant fan-cooling			
Max. operation altitude	4000 m			
Grid connection standard	G98 or G99, VDE-AR-N 4105 / VDE V 0124, EN 50549-1, VDE 0126 / UTE C 15 / VFR:2019, RD 1699 / RD 244 / UNE 206006 / UNE 206007-1, CEI 0-21, C10/11, NRS 097-2-1, TOR, EIFS 2018.2, IEC 62116, IEC 61727, IEC60068, IEC 61683, EN 50530			
Safety/EMC standard	IEC/EN 62109-1/-2, IEC/EN 61000-6-1/-2/-3/-4			
Features				
DC connection	MC4 connector			
AC connection	OT terminal			
Display	LED digital display & LED indicator			
Communication	RS485, Optional: Wi-Fi, GPRS			

Preliminary

S5-GC(50-60)K

Solis Three Phase Grid-Tied Inverters

Efficient

- Max. efficiency 98.7%
- String current up to 16A
- 5/6 MPPT design, supports multiple orientation system design
- Night time PID recovery function, increases overall system yield (optional)

Safe

- IP66, C5 Anti-Corrosion Level
- Intelligent redundant fan-cooling
- Globally recognised branded componentry for longer life
- AFCI protection, proactively reduces fire risk

Smart

- Night SVG function
- Supports export power control
- Intelligent string monitoring, smart I-V curve scan
- Scan to register on SolisCloud, supports remote upgrade and control

Economic

- Supports GPRS/WiFi communication with less wiring and reduced installation costs
- DC side supports "Y" connector
- 10/12 string inputs allow for 150%+ DC oversizing

Models:

S5-GC50K / S5-GC60K

360º View

DATASHEET

S5-GC(50-60)K

Models	50K	60K
Input DC		
Max. input voltage	1100 V	
Rated voltage	600 V	
Start-up voltage	195 V	
MPPT voltage range	180-1000 V	
Max. input current	5*32 A	6*32 A
Max. short circuit current	5*40 A	6*40 A
MPPT number/Max. input strings number	5/10	6/12
Output AC		
Rated output power	50 kW	60 kW
Max. apparent output power	55 kVA	66 kVA
Max. output power	55 kW	66 kW
Rated grid voltage	3/N/PE, 220 V / 380 V, 230 V / 400 V	
Rated grid frequency	50 Hz / 60 Hz	
Rated grid output current	76.0 A / 72.2 A	91.2 A / 86.6 A
Max. output current	83.6 A	100.3 A
Power factor	>0.99 (0.8 leading - 0.8 lagging)	
THDi	<3%	
Efficiency		
Max. efficiency	98.7%	
EU efficiency	98.3%	
Protection		
DC reverse-polarity protection	Yes	
Short circuit protection	Yes	
Output over current protection	Yes	
Surge protection	DC Type II / AC Type II	
Grid monitoring	Yes	
Anti-islanding protection	Yes	
Temperature protection	Yes	
Strings monitoring	Yes	
I/V Curve scanning	Yes	
Integrated AFCI 2.0	Optional	
Integrated PID recovery	Optional (2)	
Integrated DC switch	Yes	
General Data		
Dimensions (W*H*D)	691*578*338 mm	
Weight	53.7 kg	
Topology	Transformerless	
Self-consumption (night)	<1 W	
Operating ambient temperature range	-25 ~ +60°C	
Relative humidity	0-100%	
Ingress protection	IP66	
Noise emission (typical)	<55 dB(A)	
Cooling concept	Intelligent redundant fan-cooling	
Max. operation altitude	4000 m	
Grid connection standard	G99, VDE-AR-N 4105 / VDE V 0124, EN 50549-1, VDE 0126 / UTE C 15 / VFR:2019, RD 1699 / RD 244 / UNE 206006 / UNE 206007-1, CEI 0-21, C10/11, NRS 097-2-1, EIFS 2018.2, IEC 62116, IEC 61727, IEC60068, IEC 61683, EN 50530	
Safety/EMC standard	IEC 62109-1/-2, IEC62116 & IEC 61000-6-1/-2/-3/-4	
Features		
DC connection	MC4 connector	
AC connection	OT terminal (max. 70 mm^2)	
Display	LCD, Capacitive touch buttons	
Communication	RS485, USB, Optional: Wi-Fi, GPRS	

(1) Due to the similar functional logic, when the night time PID-Recovery function is integrated, the night time var compensation function can not be used. Also, the negative grounding option is not available for inverters with night time PID-Recovery function.

S6-GC3P(40-60)K-NV-ND

Solis Three Phase Grid-Tied Inverters

Features:

- Max. efficiency 98.6%
- String current up to 20A
- > 150% DC/AC ratio, supports high power modules
- Automatic voltage stabilization technology in weak grid conditions
- AFCI protection, proactively reduces fire risk
- Supports RS485/ WiFi/GPRS/4G
- Scan to register on SolisCloud, supports remote upgrade and control

Models:

S6-GC3P40K04-NV-ND

S6-GC3P50K04-NV-ND

S6-GC3P60K05-NV-ND

DATASHEET S6-GC3P(40-60)K-NV-ND

Models	40K04	50K04	60K05
Input DC			
Max. input voltage	1100 V		
Rated voltage	600 V		
Start-up voltage	180 V		
MPPT voltage range	180-1000 V		
Max. input current	4*40 A		5*40 A
Max. short circuit current	4*50 A		5*50 A
MPPT number/Max. input strings number	4/8		5/10
Output AC			
Rated output power	40 kW	50 kW	60 kW
Max. apparent output power	40 kVA	50 kVA	60 kVA
Max. output power	40 kW	50 kW	60 kW
Rated grid voltage	3/N/PE, 220 V / 380 V, 230 V / 400 V		
Rated grid frequency	50 Hz / 60 Hz		
Rated grid output current	60.8 A / 57.7 A	76.0 A / 72.2 A	91.2 A / 86.6 A
Max. output current	60.8 A / 57.7 A	76.0 A / 72.2 A	91.2 A / 86.6 A
Power factor	>0.99 (0.8 leading - 0.8 lagging)		
THDi	<3%		
Efficiency			
Max. efficiency	98.6%		
EU efficiency	98.1%		
Protection			
DC reverse-polarity protection	Yes		
Short circuit protection	Yes		
Output over current protection	Yes		
Surge protection	DC Type II / AC Type II		
Grid monitoring	Yes		
Anti-islanding protection	Yes		
Temperature protection	Yes		
Strings monitoring	Yes		
I/V Curve scanning	Yes		
Multi peak scan	Yes		
Integrated AFCI 2.0	Optional		
Integrated PID recovery	Optional		
Integrated DC switch	Yes		
General Data			
Dimensions (W*H*D)	515*672*287.5 mm		
Weight	34.9 kg	35.8 kg	TBD
Topology	Transformerless		
Self-consumption (night)	<1 W		
Operating ambient temperature range	-25 ~ +60°C		
Relative humidity	0-100%		
Ingress protection	IP66		
Noise emission (typical)	≤60 dB(A)		
Cooling concept	Intelligent redundant fan-cooling		
Max. operation altitude	4000 m		
Grid connection standard	G98 or G99, VDE-AR-N 4105 / VDE V 0124, EN 50549-1, VDE 0126 / UTE C 15 / VFR:2019, RD 1699 / RD 244 / UNE 206006 / UNE 206007-1, CEI 0-21, C10/11, NRS 097-2-1, TOR, EIFS 2018.2, IEC 62116, IEC 61727, IEC60068, IEC 61683, EN 50530		
Safety/EMC standard	IEC/EN 62109-1/-2, IEC/EN 61000-6-1/-2/-3/-4		
Features			
DC connection	MC4 connector		
AC connection	OT terminal		
Display	LED + APP		
Communication	RS485, Optional: Wi-Fi, GPRS		

Preliminary

Solis-(80-110)K-5G-PRO

Solis Three Phase Grid-Tied Inverters

Efficient

- 6/8 MPPTs, max. efficiency 98.5%
- > 150% DC/AC ratio
- Compatible with bifacial modules

Safe

- IP66
- AFCI protection, proactively reduces fire risk
- Built-in PID recovery for better module performance (optional)
- Globally recognised branded componentry for longer life

Smart

- Night SVG function
- Intelligent string monitoring, smart I-V curve scan
- Remote firmware upgrade with simple operation

Economic

- Power line communication (PLC) (optional)
- DC side supports "Y" connector

Models:

Solis-80K-5G-PRO

Solis-100K-5G-PRO

Solis-110K-5G-PRO

DATASHEET

Solis-(80-110)K-5G-PRO

Models	80K	100K	110K
Input DC			
Max. input voltage	1100 V		
Rated voltage	600 V		
Start-up voltage	180 V		
MPPT voltage range	160-1000 V		
Max. input current	3*(40 A / 32 A)	4*(40 A / 32 A)	
Max. short circuit current	6*50 A	8*50 A	
MPPT number/Max. input strings number	6/12	8/16	
Output AC			
Rated output power	80 kW	100 kW	110 kW
Max. apparent output power	88 kVA	110 kVA	121 kVA
Max. output power	88 kW	110 kW	121 kW
Rated grid voltage	3/N/PE, 220 V / 380 V, 230 V / 400 V		
Rated grid frequency	50 Hz / 60 Hz		
Rated grid output current	121.6 A / 115.5 A	152.0 A / 144.3 A	167.1 A / 158.8 A
Max. output current	133.7 A	167.1 A	183.8 A
Power factor	>0.99 (0.8 leading - 0.8 lagging)		
THDi	<3%		
Efficiency			
Max. efficiency	98.5%		
EU efficiency	98.0%		
Protection			
DC reverse-polarity protection	Yes		
Short circuit protection	Yes		
Output over current protection	Yes		
Surge protection	DC Type II / AC Type II		
Grid monitoring	Yes		
Anti-islanding protection	Yes		
Temperature protection	Yes		
Strings monitoring	Yes		
I/V Curve scanning	Yes		
Integrated AFCI	Yes (1)		
Integrated PID recovery	Optional		
Integrated DC switch	Yes		
Integrated AC switch	Optional		
General Data			
Dimensions (W*H*D)	1065*585*363 mm (with or without AC switch)	1183*585*363 mm (with no AC switch); 1295*585*363 mm (with AC switch)	
Weight	78 kg	98 kg	
Topology	Transformerless		
Self-consumption (night)	<2 W		
Operating ambient temperature range	-30 ~ +60°C		
Relative humidity	0-100%		
Ingress protection	IP66		
Cooling concept	Intelligent redundant fan-cooling		
Max. operation altitude	4000 m		
Grid connection standard	G99, IEC61727, EN50549-1/2		
Safety/EMC standard	IEC/EN 62109-1/-2, IEC/EN 61000-6-2/-4		
Features			
DC connection	MC4 connector		
AC connection	OT terminal (max. 240 mm^2)		
Display	LCD		
Communication	RS485, Optional: Wi-Fi, GPRS, PLC		

(1) Activation required.

S5-GC80K

Solis Three Phase Grid-Tied Inverters

Efficient

- 9 MPPTs, max. efficiency 98.7%
- > 150% DC/AC ratio
- String current up to 16A, perfectly match large current bifacial modules

Safe

- IP66
- Built-in PID recovery for better module performance (optional)
- AFCI protection, proactively reduces fire risk
- Globally recognised branded componentry for longer life

Smart

- Night SVG function
- Intelligent string monitoring, smart I-V curve scan
- Remote firmware upgrade with simple operation

Economic

- Power line communication (PLC) (optional)
- DC side supports "Y" connector

Models:

S5-GC80K

360º View

DATASHEET

S5-GC80K

Models	80K
Input DC	
Max. input voltage	1100 V
Rated voltage	600 V
Start-up voltage	195 V
MPPT voltage range	180-1000 V
Max. input current	9*32 A
Max. short circuit current	9*40 A
MPPT number/Max. input strings number	9/18
Output AC	
Rated output power	80 kW
Max. apparent output power	88 kVA
Max. output power	88 kW
Rated grid voltage	3/N/PE, 220 V / 380 V, 230 V / 400 V
Rated grid frequency	50 Hz / 60 Hz
Rated grid output current	121.6 A / 115.5 A
Max. output current	133.7 A
Power factor	>0.99 (0.8 leading - 0.8 lagging)
THDi	<3%
Efficiency	
Max. efficiency	98.7%
EU efficiency	98.3%
Protection	
DC reverse-polarity protection	Yes
Short circuit protection	Yes
Output over current protection	Yes
Surge protection	DC Type II / AC Type II
Grid monitoring	Yes
Anti-islanding protection	Yes
Temperature protection	Yes
Strings monitoring	Yes
I/V Curve scanning	Yes
Integrated AFCI 2.0	Optional
Integrated PID recovery	Optional
Integrated DC switch	Yes
Integrated AC switch	Optional
General Data	
Dimensions (W*H*D)	1050*567*314.5 mm (with AC switch)
Weight	85 kg
Topology	Transformerless
Self-consumption (night)	<2 W
Operating ambient temperature range	-30 ~ +60°C
Relative humidity	0-100%
Ingress protection	IP66
Cooling concept	Intelligent redundant fan-cooling
Max. operation altitude	4000 m
Grid connection standard	G98 or G99, VDE-AR-N 4105 / VDE-AR-N 4110 / VDE V 0124, EN 50549-1, VDE 0126 / UTE C 15 / VFR:2019, CEI 0-21, C10/11, NRS 097-2-1, TOR, EIFS 2018.2, IEC 62116, IEC 61727, IEC 60068, IEC 61683, EN 50530
Safety/EMC standard	IEC/EN 62109-1/-2, IEC/EN 61000-6-2/-4
Features	
DC connection	MC4 connector
AC connection	OT terminal (max. 185 mm^2)
Display	LCD
Communication	RS485, Optional: Wi-Fi, GPRS, PLC

S5-GC(100-110)K

Solis Three Phase Grid-Tied Inverters

Efficient

- 10 MPPTs, max. efficiency 98.7%
- > 150% DC/AC ratio
- High power tracking density 100MPPT/MW
- String current up to 16A, perfectly match large current bifacial modules

Safe

- AFCI protection, proactively reduces fire risk
- Built-in PID recovery for better module performance (optional)
- Overvoltage load reduction and leakage current suppression technology, low failure rate
- Globally recognised branded componentry for longer life

Smart

- Night SVG function
- Intelligent string monitoring, smart I-V curve scan
- Remote firmware upgrade with simple operation

Economic

- Power line communication (PLC) (optional)
- DC side supports "Y" connector

Models:

S5-GC100K

S5-GC110K

DATASHEET

S5-GC(100-110)K

Models	100K	110K
Input DC		
Max. input voltage	1100 V	
Rated voltage	600 V	
Start-up voltage	195 V	
MPPT voltage range	180-1000 V	
Max. input current	10*32 A	
Max. short circuit current	10*40 A	
MPPT number/Max. input strings number	10/20	
Output AC		
Rated output power	100 kW	110 kW
Max. apparent output power	110 kVA	121 kVA
Max. output power	110 kW	121 kW
Rated grid voltage	3/N/PE, 220 V / 380 V, 230 V / 400 V	
Rated grid frequency	50 Hz / 60 Hz	
Rated grid output current	152.0 A / 144.3 A	167.1 A / 158.8 A
Max. output current	167.1 A	183.8 A
Power factor	>0.99 (0.8 leading - 0.8 lagging)	
THDi	<3%	
Efficiency		
Max. efficiency	98.7%	
EU efficiency	98.3%	
Protection		
DC reverse-polarity protection	Yes	
Short circuit protection	Yes	
Output over current protection	Yes	
Surge protection	DC Type II / AC Type II (AC Type I optional)	
Grid monitoring	Yes	
Anti-islanding protection	Yes	
Temperature protection	Yes	
Strings monitoring	Yes	
I/V Curve scanning	Yes	
Integrated AFCI 2.0	Optional	
Integrated PID recovery	Optional	
Integrated DC switch	Yes	
Integrated AC switch	Optional	
General Data		
Dimensions (W*H*D)	1065*567*344.5 mm	
Weight	91 kg	
Topology	Transformerless	
Self-consumption (night)	<2 W	
Operating ambient temperature range	-30 ~ +60°C	
Relative humidity	0-100%	
Ingress protection	IP66	
Cooling concept	Intelligent redundant fan-cooling	
Max. operation altitude	4000 m	
Grid connection standard	VDE-AR-N 4105, VDE-AR-N 4110, VDE V 0124, VDE V 0126-1-1, UTE C15-712-1, NRS 097-1-2, G98, G99, EN 50549-1/-2, RD 1699, TOR, UNE 206006, UNE 206007-1, CEI 0-21, IEC61727, DEWA	
Safety/EMC standard	IEC/EN 62109-1/-2, IEC/EN 61000-6-1/-2/-3/-4	
Features		
DC connection	MC4 connector	
AC connection	OT terminal (max. 185 mm^2)	
Display	LCD	
Communication	RS485, Optional: Wi-Fi, GPRS, PLC	

S6-GC(80-125)K

Solis Three Phase Grid-Tied Inverters

Efficient

- 8/10 MPPTs, max. efficiency 98.7%
- > 150% DC/AC ratio
- String current up to 21A, perfectly match large current bifacial modules

Safe

- IP66
- AFCI protection, proactively reduces fire risk
- Globally recognised branded componentry for longer life

Smart

- Supports export power control
- Intelligent string monitoring, smart I-V curve scan
- Remote firmware upgrade with simple operation

Economic

- Power line communication (PLC) (optional)
- Night time PID recovery function, increases overall system yield (optional)
- DC side supports "Y" connector

Models:

S6-GC80K

S6-GC100K

S6-GC110K

S6-GC125K

DATASHEET

S6-GC(80-125)K

Models	80K	100K	110K	125K
Input DC				
Max. input voltage	1100 V			
Rated voltage	600 V			
Start-up voltage	180 V			
MPPT voltage range	160-1000 V			
Max. input current	4*(42 A / 36 A)	5*(42 A / 36 A)		
Max. short circuit current	8*50 A	10*50 A		
MPPT number/Max. input strings number	8/16	10/20		
Output AC				
Rated output power	80 kW	100 kW	110 kW	125 kW
Max. apparent output power	88 kVA	110 kVA	121 kVA	125 kVA
Max. output power	88 kW	110 kW	121 kW	125 kW
Rated grid voltage	3/N/PE, 220 V / 380 V, 230 V / 400 V			
Rated grid frequency	50 Hz / 60 Hz			
Rated grid output current	121.6 A / 115.5 A	152.0 A / 144.3 A	167.1 A / 158.8 A	189.9 A / 180.4 A
Max. output current	133.7 A	167.1 A	183.8 A	189.9 A
Power factor	>0.99 (0.8 leading - 0.8 lagging)			
THDi	<3%			
Efficiency				
Max. efficiency	98.7%			
EU efficiency	98.3%			
Protection				
DC reverse-polarity protection	Yes			
Short circuit protection	Yes			
Output over current protection	Yes			
Surge protection	DC Type II / AC Type II			
Grid monitoring	Yes			
Anti-islanding protection	Yes			
Temperature protection	Yes			
Strings monitoring	Yes			
I/V Curve scanning	Yes			
Integrated AFCI 2.0	Optional			
Integrated PID recovery	Optional			
Integrated DC switch	Yes			
Integrated AC switch	Optional			
General Data				
Dimensions (W*H*D)	1014*567*345 mm			
Weight	93 kg	96 kg		
Topology	Transformerless			
Self-consumption (night)	<2 W			
Operating ambient temperature range	-30 ~ +60°C			
Relative humidity	0-100%			
Ingress protection	IP66			
Cooling concept	Intelligent redundant fan-cooling			
Max. operation altitude	4000 m			
Grid connection standard	G99, IEC61727, EN50549-1/2, VDE4110			
Safety/EMC standard	IEC/EN 62109-1/-2, IEC/EN 61000-6-2/-4			
Features				
DC connection	MC4 connector			
AC connection	OT terminal (max. 240 mm^2)			
Display	LCD			
Communication	RS485, Optional: Wi-Fi, GPRS, PLC			

S6-GC3P(125-150)K12-NV-ND

Solis Three Phase Grid-Tied Inverters

Efficient

- 12 MPPTs, max. efficiency 98.8%
- > 150% DC/AC ratio
- Single MPPT maximum current 48A, perfectly match large current bifacial modules

Safe

- IP66
- AFCI protection, proactively reduces fire risk
- Globally recognised branded componentry for longer life

Smart

- Supports export power control
- Intelligent string monitoring, smart I-V curve scan
- Remote firmware upgrade with simple operation

Economic

- Power line communication (PLC) (optional)
- Night time PID recovery function, increases overall system yield (optional)
- DC side supports "Y" connector

Models:

S6-GC3P125K12-NV-ND

S6-GC3P150K12-NV-ND

DATASHEET S6-GC3P(125-150)K12-NV-ND

Models	125K	150K
Input DC		
Max. input voltage	1100 V	
Rated voltage	600 V	
Start-up voltage	180 V	
MPPT voltage range	160-1000 V	
Max. input current	12*48 A	
Max. short circuit current	12*66 A	
MPPT number/Max. input strings number	12/24	
Output AC		
Rated output power	125 kW	150 kW
Max. apparent output power	137.5 kVA	165 kVA
Max. output power	137.5 kW	165 kW
Rated grid voltage	3/N/PE, 220 V / 380 V, 230 V / 400 V	
Rated grid frequency	50 Hz / 60 Hz	
Rated grid output current	180.4 A / 189.9 A	216.5 A / 227.9 A
Max. output current	208.9 A	250.6 A
Power factor	>0.99 (0.8 leading - 0.8 lagging)	
THDi	<3%	
Efficiency		
Max. efficiency	98.8%	
EU efficiency	98.3%	
Protection		
DC reverse-polarity protection	Yes	
Short circuit protection	Yes	
Output over current protection	Yes	
Surge protection	DC Type II / AC Type II	
Grid monitoring	Yes	
Anti-islanding protection	Yes	
Temperature protection	Yes	
Strings monitoring	Yes	
I/V Curve scanning	Yes	
Integrated AFCI 2.0	Optional	
Integrated PID recovery	Optional	
Integrated DC switch	Yes	
Integrated AC switch	Optional	
General Data		
Dimensions (W*H*D)	1035.5*869*396 mm	
Weight	95 kg	
Topology	Transformerless	
Self-consumption (night)	<2 W	
Operating ambient temperature range	-30 ~ +60°C	
Relative humidity	0-100%	
Ingress protection	IP66	
Cooling concept	Intelligent redundant fan-cooling	
Max. operation altitude	4000 m	
Grid connection standard	G99, IEC61727, EN50549-1/2, VDE4110	
Safety/EMC standard	IEC/EN 62109-1/-2, IEC/EN 61000-6-2/-4	
Features		
DC connection	MC4 connector	
AC connection	OT terminal (max. 400 mm^2)	
Display	LED + APP	
Communication	RS485, Optional: Wi-Fi, GPRS, PLC	

Preliminary

C&I Power Plant Case Study

Ninghai Power Plant

China

38MW

Solis-(215-255)K-EHV-5G

Ninghai Power Plant transitions away from traditional thermal power to integrate solar power generation overcoming technical challenges along the way.

Ninghai Power is dedicated to the innovation of greener power through science and technology and has become a leader in Agrisolar development. As a pioneer in its industry the company has has implemented a new energy park project which includes fishery-solar system, Agrisolar and floating solar systems, solar carport and solar corridor as well as a more traditional solar rooftop. Over 8 different installation types have enabled more green energy to be installed in more areas - true "out of the box" thinking.

The solar plant now generates more than 300 billion kilowatts of green energy.

India

1.12MW **S5-GC(80-110)K**

Greece

100kW **S5-GC(100-110)K**

UK

2MW

Solis-(100-110)K-5G

Netherlands

168.35kW **Solis-(80-110)K-5G**

Philippines

270kW **Solis-(25-30)K-LV**

Utility Scale Solar PV Solutions

Solis has optimized and innovated around the entire process of utility solar PV solutions. Deeply integrated system design, digital management, and IoT technology effectively optimize the initial investment and future O&M costs of the power station increasing the power generation of the system and the rate of return on investment. Through the concept of "Efficient, safe, reliable, smart O&M, and system-friendly" we maximise the value for customers.

The 1500V high-power system solution can effectively reduce the number of equipment and cable consumption, reduce the initial investment cost, and facilitate installation and maintenance.
Solis utility PV solution has the characteristics of low LCOE. From the perspective of inverter performance improvement, it includes optimizing software algorithms and optimizing hardware port compatibility to improve system efficiency and reduce system investment costs.
Solis utility inverter has a large single power, up to 350kW. The high-efficiency and high-power-density inverter can reduce the workload of installation and maintenance, reduce costs and improve efficiency.
Solis utility PV solution is supplemented by a series of advanced digital services and intelligent monitoring equipment based on SolisCloud, simplifying the application difficulty of the intelligent system, and providing a more complete, high-quality and efficient cloud smart O&M solution.

Models:

Solis-(215-255)K-EHV-5G
S6-GU350K-EHV

Output:

215 kW - 350 kW

Utility Scale Solar PV Solution

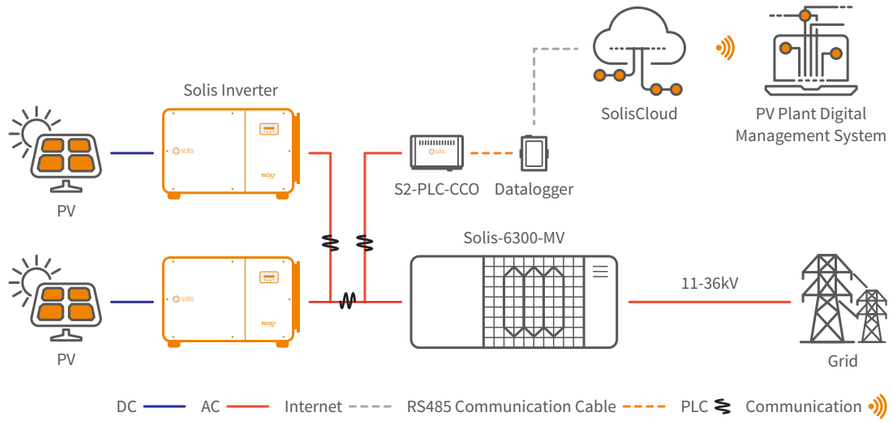

Solis-(215-255)K-EHV-5G

Solis Three Phase Grid-Tied Inverters

Efficient

- 9/12/14 MPPTs, max. efficiency 99.0%
- > 150% DC/AC ratio
- High power tracking density 55MPPT/MW
- Compatible with 550W+ bifacial modules

Safe

- IP66
- Built-in PID recovery for better module performance
- Fuse free design, safe and maintenance free
- Globally recognised branded componentry for longer life

Smart

- Night SVG function
- Intelligent string monitoring, smart I-V curve scan
- Remote firmware upgrade with simple operation

Economic

- Power line communication (PLC) (optional)
- DC side supports "Y" connector

Models:

Solis-215K-EHV-5G-PLUS

Solis-255K-EHV-5G

Solis-255K-EHV-5G-PLUS

360º View

DATASHEET

Solis-(215-255)K-EHV-5G

Models	215K-PLUS	255K	255K-PLUS
Input DC			
Max. input voltage	1500 V		
Rated voltage	1080 V		
Start-up voltage	500 V		
MPPT voltage range	480-1500 V		
Max. input current	9*30 A	14*26 A	12*30 A
Max. short circuit current	9*50 A	14*40 A	12*50 A
MPPT number/Max. input strings number	9/18	14/28	12/24
Output AC			
Output power	215 kVA@30°C / 205 kVA@ 40°C / 195 kVA@50°C	255 kVA@30°C / 235 kVA@40°C / 220 kVA@50°C	
Rated grid voltage	3/PE, 800 V		
Grid voltage range	640-920 V		
Rated grid frequency	50 Hz / 60 Hz		
Max. output current	155.2 A	184.0 A	
Power factor	>0.99 (0.8 leading - 0.8 lagging)		
THDi	<3%		
Efficiency			
Max. efficiency	99.0%		
EU efficiency	98.8%	98.7%	98.8%
Protection			
DC reverse-polarity protection	Yes		
Short circuit protection	Yes		
Output over current protection	Yes		
Surge protection	DC Type II / AC Type II		
Grid monitoring	Yes		
Anti-islanding protection	Yes		
Temperature protection	Yes		
Strings monitoring	Yes		
I/V Curve scanning	Yes		
Night time SVG function	Yes		
Integrated PID recovery	Yes		
Integrated DC switch	Yes		
General Data			
Dimensions (W*H*D)	1125*770*384 mm		
Weight	109 kg	113 kg	
Topology	Transformerless		
Self-consumption (night)	<2 W		
Operating ambient temperature range	-30 ~ +60°C		
Relative humidity	0-100%		
Ingress protection	IP66		
Cooling concept	Intelligent redundant fan-cooling		
Max. operation altitude	4000 m		
Grid connection standard	EN50549, G99, AS4777.2, VDE0126, IEC61727, VDE4110, CEA 2019		
Safety/EMC standard	IEC/EN 62109-1/-2, IEC/EN 61000-6-2/-4		
Features			
DC connection	MC4 connector		
AC connection	OT terminal (max. 300 mm^2)		
Display	LCD		
Communication	RS485, Optional: PLC		

S6-GU350K-EHV

Solis Three Phase Grid-Tied Inverters

Efficient

- 12/16 MPPTs, max. efficiency 99.0%
- > 150% DC/AC ratio
- Lower starting voltage, longer power generation time
- Wide MPPT current design, compatible with 182 and 210 series bifacial modules

Safe

- IP66, C5 Anti-Corrosion Level
- Built-in PID recovery for better module performance
- Fuse free design, safe and maintenance free

Smart

- Night SVG function
- Intelligent string monitoring, smart I-V curve scan
- Remote firmware upgrade with simple operation

Economic

- Power line communication (PLC) (optional)
- Integrated tracking bracket power supply interface

Models:

S6-GU350K-EHV-M12

S6-GU350K-EHV-M16

DATASHEET

S6-GU350K-EHV

Models	350K-M12	350K-M16
Input DC		
Max. input voltage	1500 V	
Rated voltage	1080 V	
Start-up voltage	500 V	
MPPT voltage range	480-1500 V	
Max. input current	12*40 A	16*30 A
Max. short circuit current	12*60 A	16*60 A
MPPT number/Max. input strings number	12/24	16/32
Output AC		
Rated output power	350 kW	
Max. apparent output power	350 kVA	
Rated grid voltage	3/PE, 800 V	
Grid voltage range	640-920 V	
Rated grid frequency	50 Hz / 60 Hz	
Max. output current	252.6 A	
Power factor	>0.99 (0.8 leading - 0.8 lagging)	
THDi	<3%	
Efficiency		
Max. efficiency	99.0%	
EU efficiency	98.7%	
Protection		
DC reverse-polarity protection	Yes	
Short circuit protection	Yes	
Output over current protection	Yes	
Surge protection	DC Type II / AC Type II	
Grid monitoring	Yes	
Anti-islanding protection	Yes	
Temperature protection	Yes	
Strings monitoring	Yes	
I/V Curve scanning	Yes	
Night time SVG function	Yes	
Integrated PID recovery	Yes	
Integrated DC switch	Yes	
General Data		
Dimensions (W*H*D)	1175*945.5*446 mm	
Weight	134 kg	143 kg
Topology	Transformerless	
Self-consumption (night)	<3 W	
Operating ambient temperature range	-30 ~ +60°C	
Relative humidity	0-100%	
Ingress protection	IP66	
Cooling concept	Intelligent redundant fan-cooling	
Max. operation altitude	4000 m	
Grid connection standard	EN50549, G99, AS4777.2, VDE0126, IEC61727, VDE4110, CEA 2019	
Safety/EMC standard	IEC62109-1/-2, EN61000-6-2/-4	
Features		
DC connection	MC4-EVO2 connector	
AC connection	OT terminal (max. 400 mm^2)	
Display	LED, Bluetooth + APP	
Communication	RS485, Optional: PLC	

Solis-6300-MV

Solis MV Station

For 1500 V string inverter Solis 255K and 350K

Integrated delivery

- Mainstream 6.3MW subarray, widely used globally
- 20 foot standard container delivery, easy to transport

Reliable products

- LV panel, transformer and RMU to be placed independently
- Adopt international first-line brand equipment with reliable quality

Convenient installation

- A complete solution, from inverter to main step-up transformer
- When the container is lifted to the foundation, only LV and MV cables need to be connected

Easy O&M

- Full frontal maintenance design
- Modular design of MV equipment, easy to replace

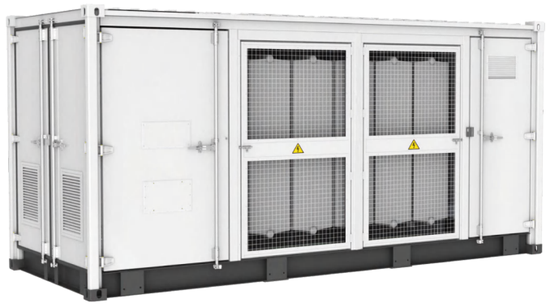

Circuit diagram

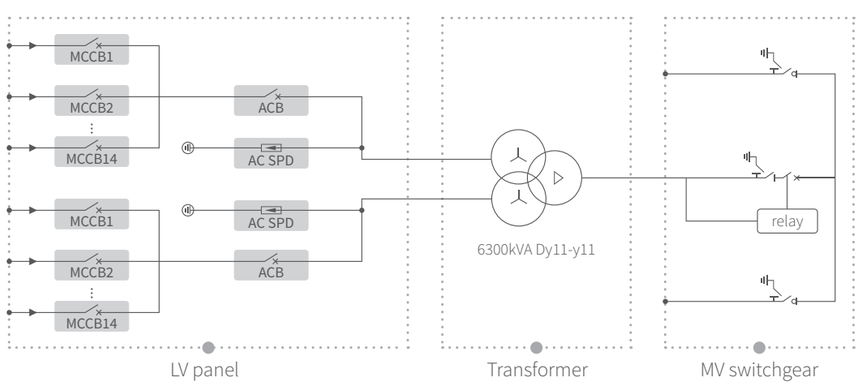

DATASHEET

Solis-6300-MV

Models	Solis-6300-MV
LV panel	
MCCB specification	250 A / 800 Vac / 3P, 14*2 pcs
ACB specification	3200 A / 800 Vac / 3P, 1*2 pcs
Connection form with transformer	Copper busbar
Transformer	
Transformer type	Oil immersed
Rated output power	6300 kVA @ 40°C
Max. output power	6930 kVA @ 40°C 3h
LV/MV voltage	0.8 kV / 10-35 kV
Max. input current	2577 A *2
Tapping on HV	±2*2.5%
Vector group	Dy11y11
Frequency	50 Hz / 60 Hz
Cooling type	ONAN
Impedance	7%
Oil type	Mineral oil (Optional: plant oil)
Winding material	Al/Al (Optional: Cu/Cu)
Insulation class	A
Connection form with MV switchgear	Cable
MV Switchgear	
Type of insulate	SF6
Rated voltage	12-36 kV
Rated current	630 A
Internal arcing fault	20 kA / 1 s
Qty of feeder	3 feeders
Protection	
LV surge protection	AC type I+II
AC input protection	Circuit breaker
Transformer protection	Oil-temperature, oil-level, oil-pressure
Fire protection	Smoke detection, emergency lighting
General Data	
Dimensions (W*H*D)	6058*2896*2438 mm
Approximate weight	24 T
Operating ambient temperature range	-25 ~ +60°C
Max. operation altitude	1000 m (standard)
Auxiliary power supply	5 kVA / 230 V (Optional: max. 40 kVA)
UPS	1 kVA 30 min (Optional: max. 2 kVA 2h)
Degree of protection	IP54
Allowable relative humidity range	0-95%
Communication	RS485, Ethernet, Optical fiber
Compliance	IEC 60076, IEC 62271, IEC61439

Utility-scale Plant Case Study

Mexico
20MW Solis-20K-HV

Poland
10MW Solis-125K-EHV-5G

China
1GW
Solis-(215-255)K-EHV-5G

India
2MW Solis-(100-110)K

China
300MW Solis-(215-255)K-EHV-5G

Tidal-Flat 300MW Utility Scale Solar PV Plant

After the project is put into operation, the generating capacity is estimated to be 400,000,000 kWh/ year and delivers a reduction of 350, 000 tons of CO_2, 12,000 tons of SO_2, and 110,000 tons of Carbon dust. Solis commercial scale string inverters boast an abundance of technological features which can adapt to a variety of environments. We look forward to seeing more applications utilizing Solis inverters. We are committed to our mission - Developing Technology to Power the World with Clean Energy.

Export Power Management Solutions

In some countries, local regulations limit the amount of PV power that can be exported to the grid or allow no export. Solis offers two export limitation solutions for single and multiple inverters system.

Export Power Management Solutions - Single-inverter System

In a single-inverter system, the export limitation is integrated into the inverter firmware. Use a meter or a CT to measure the output of the system, then to adjust PV power production.

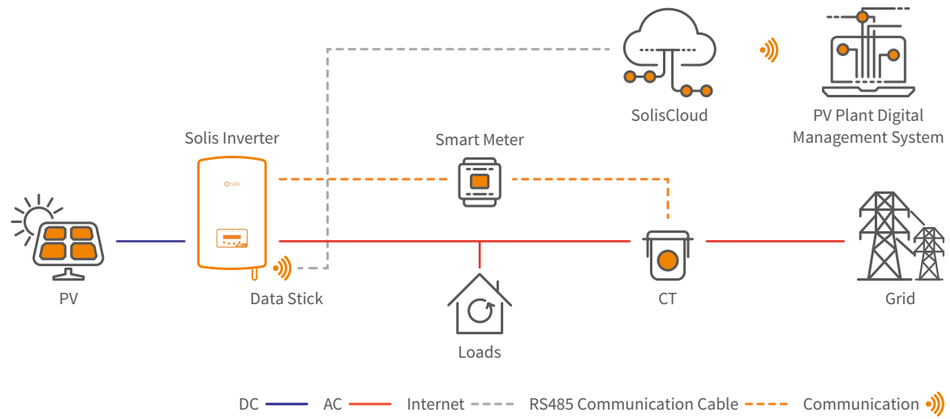

Export Power Management Solution - Multi-inverter System

In a multi-inverter system, the export limitation is integrated into the EPM (Export Power Manager) firmware. The EPM will monitor and control the backflow power from the inverter to the grid thus providing export power control of inverters.

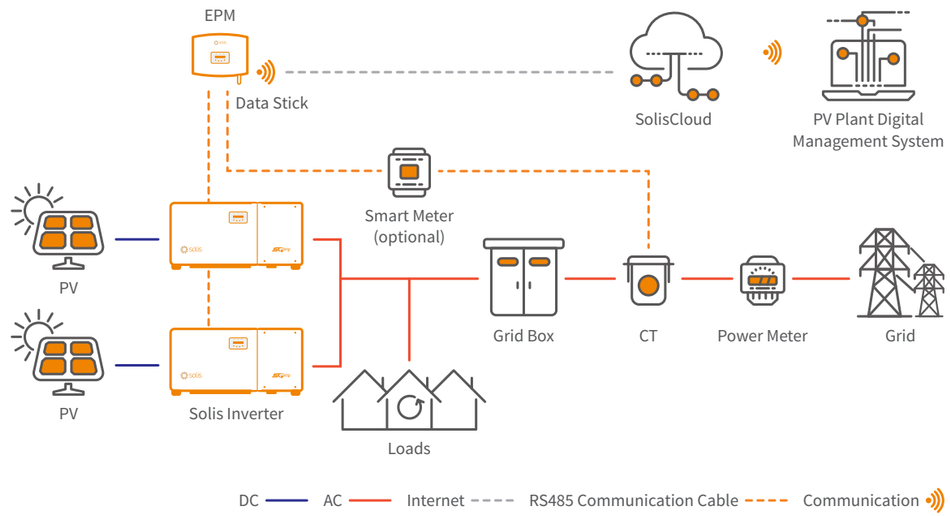

Solis-EPM-5G

Solis Export Power Manager

Smart & strong

- Simultaneous control of 20 X Solis inverters
- Realizing reactive compensation of the system

Saving & high precision

- Simultaneously monitor the operating data of the 20 X Solis inverter, saving the cost of the monitoring system
- The control accuracy is up to 1%, which improves the system's spontaneous use rate

Friendly & compatible

- Supports simultaneous access of Solis inverters with different powers
- Monitor power generation and load consumption at all times

Models:

Solis-EPM1-5G

Solis-EPM3-5G-PLUS

Solis-EPM3-5G-PRO

360º View

DATASHEET

Solis-EPM-5G

Models	Solis-EPM1-5G	Solis-EPM3-5G-PLUS	Solis-EPM3-5G-PRO
Input AC			
Rated voltage	1/N/PE, 230 V	3/(N)/PE, 400 V; 3/PE, 480 V	1/N/PE, 230 V; 3/(N)/PE, 400 V; 3/PE, 480 V
Input voltage range	100 ~ 300 V (L-N)	175~ 494 V (L-L)	100 ~ 300 V (L-N); 175 ~ 494 V (L-L)
Input frequency range	45~65 Hz		
Communication			
Inverter communication	Modbus		
Communication with inverter	RS485 (Wired)		
Max. communication inverter numbers	20	20 (Recommended)	20 (Recommended)
Monitoring	WiFi/4G/LAN Stick (Optional)	WiFi/LAN (Integrated)	WiFi/4G/LAN Stick (Optional)
General Data			
Operating ambient temperature range	-25 ~ +60°C		
Relative humidity	5%~95%		
Max. operation altitude	2000 m		
Ingress protection	IP65		
Pollution degree	PD2 (Inside), PD3 (Outside)		
Overvoltage category	III		
Self-consumption	<6 W	<15 W	<6 W
Dimensions (W*H*D)	364*276*114 mm	488*446*149 mm	364*276*114 mm
Weight	2.1 kg (without CT, Meter)	5.4 kg (without CT)	2.1 kg (without CT, Meter)
AC connection	Quick connection terminal		
Display	LCD		
Smart meter	No	Three phase: DTSD1352-C (Integrated)	Split phase: AGF-AE-D Three phase: ADL3000-E-B
CT connection	Plug terminal		
CT specification	Single phase: Standard (100/5 A or 300/5 A)	Three phase: Optional (Secondary current is 5 A)	Split phase: Standard (200/40 mA) Three phase: Optional (Secondary current is 5A)
Power control accuracy	1%Pn		
Features			
Failsafe function	Yes		
Remote upgrade	Yes		
Control time	5 s		

CT specification

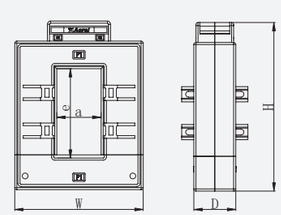

Specification	Dimensions (mm)			Hole size (mm)		Ratio
	W	H	D	a	e	
CT-30×20-100 A	90	114	40	22	32	100:5 A
CT-60×40-300 A	114	140	36	42	62	300:5 A
CT-80×40-600 A	122	162	40	42	82	600:5 A
CT-80×40-1000 A	122	162	40	42	82	1000:5 A
CT-160×80-2000 A	184	254	52	82	162	2000:5 A
CT-160×80-3000 A	184	254	52	82	162	3000:5 A

SolisCloud: Intelligent Solar Energy System Monitoring

The SolisCloud intelligent monitoring system includes hardware and software products and is a comprehensive energy management solution. Hardware products, including data stick, data box, EPM and PLC, etc; transmit to SolisCloud online energy management platform. Real-time monitoring, visualized management and remote O & M of residential, C&I and utility scale solar PV plants.

S2-WL-ST

S2-WL-ST (4 Pin) S2-WL-ST (USB)

S3-WiFi-ST

S3-WiFi-ST

S4-WiFi-ST

S4-WiFi-ST

S5-WiFi-ST

S5-WiFi-ST-4Pin S5-WiFi-ST-USB

S1-W4G-ST

S1-W4G-ST (4 Pin) S1-W4G-ST (USB)

S3-GPRS-ST

S3-GPRS-ST

S2-RF-LINK

S2-RF-ST-4Pin S2-RF-ST-USB S2-RF-Gateway

S3-Logger

S3-Logger

SolisCloud

New generation Solis PV monitoring platform

SolisCloud is the new generation of intelligent PV system monitoring. This new monitoring platform will empower you like never before. You will have full control of your system whenever and wherever you are. You will benefit from upgraded accurate fault alarm messaging that is adjustable to notify you within hours that fit meet your needs.

For simple O&M the new platform features a full size display of all your installations with real-time data. You will have an intelligent alarm system that gives recommendations to quickly repair your field faults. In depth analysis tools allow you to understand the overall health of your system. IV curve scanning can be done easily and quickly on your whole system. A live power flow display gives visibility of both standard solar systems as well as storage systems. Most importantly you will have complete control of your systems and be able to monitor and adapt anything when and how you want.

Intelligent Monitoring Solution - SolisCloud

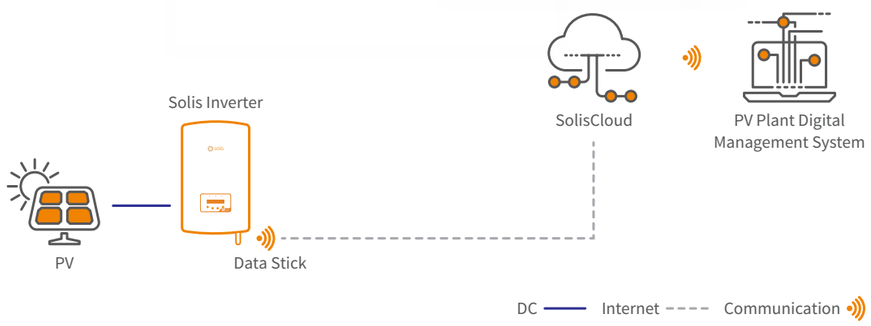

Advanced Cloud Platform

- Connecting with multiple types of devices seamlessly: Inverters, export power managers, weather stations, etc.

Efficient O & M

- Smart I-V curve scan, system health report, string-level fault finding

Multiple Plant Management

- Manage multiple types of systems across residential, commercial and utility scale plants. Enables multiple team management across different sectors

Full Screen Display Mode

- Clear and concise display of system performance and benefits including carbon emissions saved and equivalent trees planted as well as showing system yield & earnings

Accessories available:

S2-WL-ST	S1-W4G-ST
S3-WiFi-ST	S3-GPRS-ST
S4-WiFi-ST	S2-RF-LINK
S5-WiFi-ST	S3-Logger

S2-WL-ST

Solis Data Loggers

Use RS485 communication method to connect the inverters, up to 10 inverters can be connected at the same time. Data communication with the monitoring system through wireless WiFi network or LAN, which can realize remote control and monitoring. The network transmits intuitive data, which is convenient for customers to monitor anytime and anywhere.

Features:

- Support WiFi and LAN communication
- Status indicator, easy to display working status
- RESET button, one key to send data, convenient debugging
- Plug and play, quick installation
- Fault alarm, real-time monitoring
- Support Bluetooth nearby connection and debugging
- One-key assignment of inverter address, efficient and labor-saving

S2-WL-ST (4 Pin)

S2-WL-ST (USB)

Intelligent Monitoring Solution - S2-WL-ST

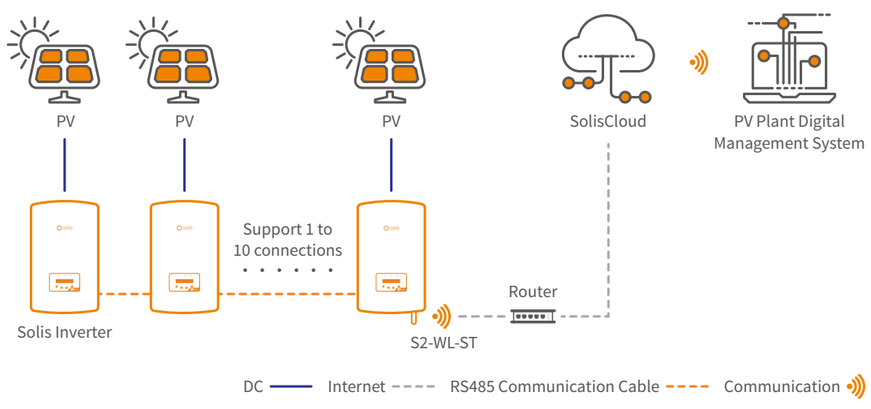

DATASHEET

S2-WL-ST

Models	S2-WL-ST (4 Pin)	S2-WL-ST (USB)
Communication		
Supported device type	Solis inverter	
Number of connected inverters (1)	≤10	
Data collection intervals	5 minutes	
Status indicator	3 LED Indicator Lights	
Communication interface	External 4-Pin Port	External USB Port
Ethernet communication	Number of routes × 1, 10 / 100Mbps adaptive, communication distance ≤ 100m	
Wireless communication	802.11b/g/n (2.4G) (2)	
Near end communication	BLE4.2	
Configuration method	APP/WEB	
Electrical		
Operating voltage	DC 5 V (+/-5%)	
Operating power consumption	≤2 W	
Environment		
Operating ambient temperature range	-30 ~ +65°C	
Operating humidity	5%-95%, relative humidity, non-condensing	
Storage temperature	-40 ~ +70°C	
Storage humidity	< 40%	
Max. operation altitude	4000 m	
Protection degree	IP65	
Mechanical		
Dimensions (L*W*H)	145*50*41 mm	130*50*41 mm
Installation method	Externally Insert + Twist Lock	Externally Insert + Tab Lock
Weight	100 g	90 g
Others		
Certification	CE, FCC	

(1) Inverters must first be hand-in-hand connected by RS485. (2) 5 GHz Wi-Fi networks are not supported.

S3-WiFi-ST

Solis Data Loggers

Use RS485 communication method to connect the inverter, and data connection through wireless WiFi network, which can realize remote control and monitoring. The network transmits intuitive data, which is convenient for customers to monitor at any time and place.

Features:

- Fault alarm, real-time monitoring
- Status indicator, easy to display working status
- Plug and play, convenient and fast
- RESET button, one key to send data, convenient debugging

S3-WiFi-ST

Intelligent Monitoring Solution - S3-WiFi-ST

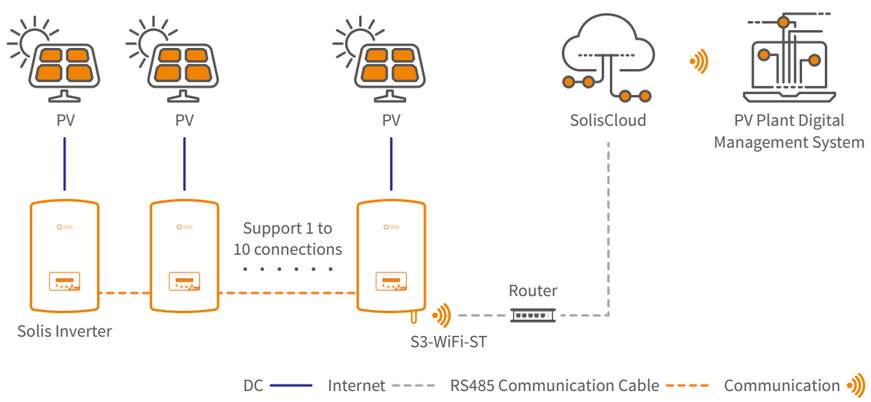

DATASHEET S3-WiFi-ST

Models	S3-WiFi-ST
Communication	
Supported device type	Solis inverter
Number of connected inverters (1)	≤10
Data collection intervals	5 minutes
Status indicator	3 LED Indicator Lights
Communication interface	External 4-Pin Port
Wireless communication	802.11b/g/n (2.4G) (2)
Configuration method	APP/WEB
Electrical	
Operating voltage	DC 5V(+/-5%)
Operating power consumption	≤2 W
Environment	
Operating ambient temperature range	-30 ~ +65°C
Operating humidity	5%-95%, relative humidity, non-condensing
Storage temperature	-40 ~ +70°C
Storage humidity	< 40%
Max. operation altitude	4000 m
Protection degree	IP65
Mechanical	
Dimensions (L*W*H)	133*44*44 mm
Installation method	Externally Insert + Twist Lock
Weight	85 g
Others	
Certification	CE, FCC

(1) Inverters must first be hand-in-hand connected by RS485. (2) 5 GHz Wi-Fi networks are not supported.

S4-WiFi-ST

Solis Data Loggers

Use RS485 communication method to connect the inverters, up to 10 inverters can be connected at the same time. Data communication with the monitoring system through wireless WiFi network, which can realize remote control and monitoring. The network transmits intuitive data, which is convenient for customers to monitor anytime and anywhere.

Features:

- Fault alarm, real-time monitoring
- Status indicator, easy to display working status
- Plug and play, convenient and fast
- RESET button, one key to send data, convenient debugging

S4-WiFi-ST

Intelligent Monitoring Solution - S4-WiFi-ST

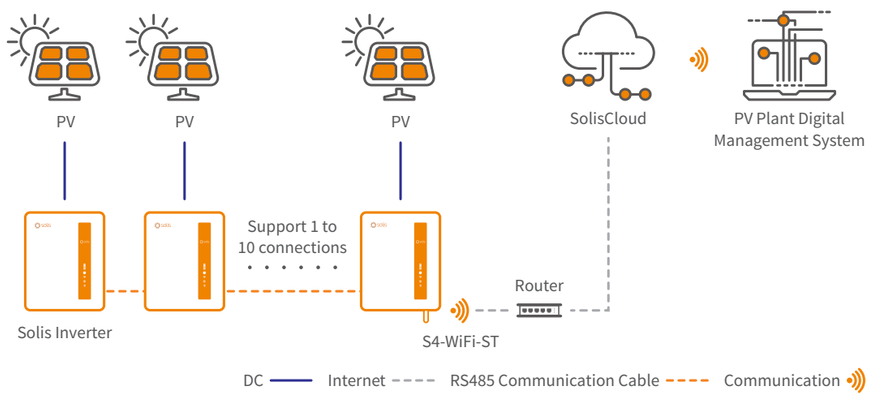

DATASHEET S4-WiFi-ST

Models	S4-WiFi-ST
Communication	
Supported device type	Solis inverter
Number of connected inverters (1)	≤10
Data collection intervals	5 minutes
Status indicator	3 LED Indicator Lights
Communication interface	External USB Port
Wireless communication	802.11b/g/n (2.4G) (2)
Configuration method	APP/WEB
Electrical	
Operating voltage	DC 5V(+/-5%)
Operating power consumption	≤2 W
Environment	
Operating ambient temperature range	-30 ~ +65°C
Operating humidity	5%-95%, relative humidity, non-condensing
Storage temperature	-40 ~ +70°C
Storage humidity	< 40%
Max. operation altitude	4000 m
Protection degree	IP65
Mechanical	
Dimensions (L*W*H)	113*50*34 mm
Installation method	Externally Insert + Tab Lock
Weight	65 g
Others	
Certification	CE, FCC

(1) Inverters must first be hand-in-hand connected by RS485. (2) 5 GHz Wi-Fi networks are not supported.

S5-WiFi-ST

Solis Data Loggers

Up to 10 inverters can be connected to 1 data logger. The logger connects with the local Wi-Fi network and transmits data wirelessly to SolisCloud. SolisCloud, the Solis monitoring platform, allows for remote system monitoring and control. The data is clear and detailed, making it easy to monitor and troubleshoot from anywhere anytime.

Features:

- Send alarm notifications through text and email
- Intuitive LED indicator lights display the operating status
- Simple plug-and play installation makes commissioning quick and easy
- One button for instant data transmission and device configuration
- Support dual-band router with 5GHz and 2.4GHz
- Support Bluetooth nearby connection and debugging

S5-WiFi-ST-4Pin

S5-WiFi-ST-USB

Intelligent Monitoring Solution - S5-WiFi-ST

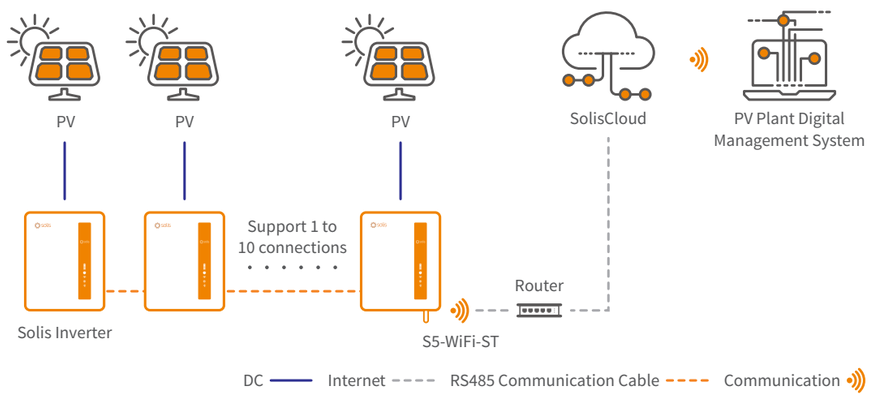

DATASHEET

S5-WiFi-ST

Models	S5-WiFi-ST-4Pin	S5-WiFi-ST-USB
Communication		
Supported device type	Solis inverter	
Number of connected inverters [1]	≤10	
Data collection intervals	5 minutes	
Status indicator	3 LED Indicator Lights	
Communication interface	External 4-Pin Port	External USB Port
Wireless communication	802.11b/g/n (2.4G) 802.11a/n (5G)	
Near end communication	BLE5.0	
Configuration method	APP/WEB	
Electrical		
Operating voltage	DC 5 V (+/-5%)	
Operating power consumption	≤2 W	
Environment		
Operating ambient temperature range	-30 ~ +65°C	
Operating humidity	5%-95%, relative humidity, non-condensing	
Storage temperature	-40 ~ +70°C	
Storage humidity	< 40%	
Max. operation altitude	4000 m	
Protection degree	IP65	
Mechanical		
Dimensions (L*W*H)	128*50*34 mm	113*50*34 mm
Installation method	Externally Insert + Twist Lock	Externally Insert + Tab Lock
Weight	80 g	65 g
Others		
Certification	CE,FCC	

(1) Inverters must first be hand-in-hand connected by RS485.

S1-W4G-ST

Solis Data Loggers

Use RS485 communication method to connect the inverters, up to 10 inverters can be connected at the same time. Data communication with the monitoring system through wireless WiFi network or 4G, which can realize remote control and monitoring. The network transmits intuitive data, which is convenient for customers to monitor anytime and anywhere.

Features:

- Support WiFi and 4G communication
- Status indicator, easy to display working status
- RESET button, one key to send data, convenient debugging
- Fault alarm, real-time monitoring
- Support Bluetooth nearby connection and debugging
- One-key assignment of inverter address, efficient and labor-saving

S1-W4G-ST (4 Pin)

S1-W4G-ST (USB)

Intelligent Monitoring Solution - S1-W4G-ST

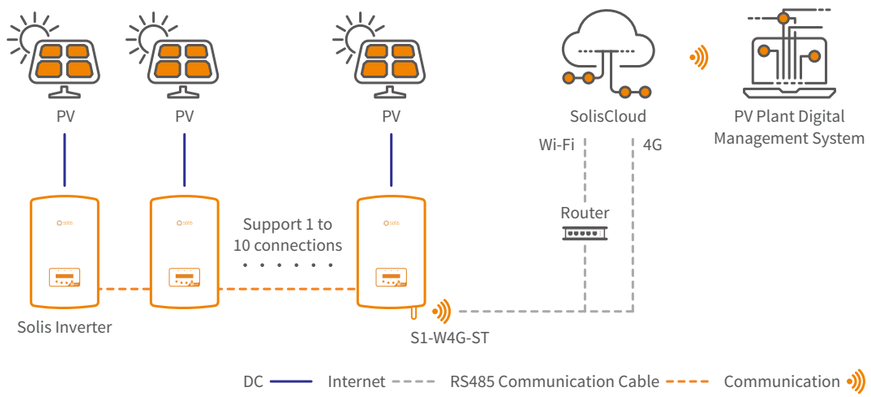

DATASHEET

S1-W4G-ST

Models	S1-W4G-ST (4 Pin)	S1-W4G-ST (USB)
Communication		
Supported device type	Solis inverter	
Number of connected inverters [1]	≤10	
Data collection intervals	5 minutes	
Status indicator	3 LED Indicator Lights	
Communication interface	External 4-Pin Port	External USB Port
Wireless communication	WiFi: 802.11b/g/n (2.4G) [2] GSM/GPRS: 850/900/1800/1900 MHz	
Near end communication	BLE4.2	
Configuration method	APP/WEB	
Electrical		
Operating voltage	DC 5 V (+/-5%)	
Operating power consumption	≤5 W	
Environment		
Operating ambient temperature range	-30 ~ +65°C	
Operating humidity	5%-95%, relative humidity, non-condensing	
Storage temperature	-40 ~ +70°C	
Storage humidity	< 40%	
Max. operation altitude	4000 m	
Protection degree	IP65	
Mechanical		
Dimensions (L*W*H)	128*50*34 mm	113*50*34 mm
Installation method	Externally Insert + Twist Lock	Externally Insert + Tab Lock
Weight	80 g	65 g
Others		
Certification	CE, FCC	

(1) Inverters must first be hand-in-hand connected by RS485. (2) 5 GHz Wi-Fi networks are not supported.

S3-GPRS-ST

Solis Data Loggers

Use RS485 communication method to connect the inverter, and data connection through GPRS, which can realize remote control and monitoring. The network transmits intuitive data, which is convenient for customers to monitor at any time and place.

Features:

- Fault alarm, real-time monitoring
- Status indicator, easy to display working status
- Plug and play, convenient and fast
- RESET button, one key to send data, convenient debugging

S3-GPRS-ST

Intelligent Monitoring Solution - S3-GPRS-ST

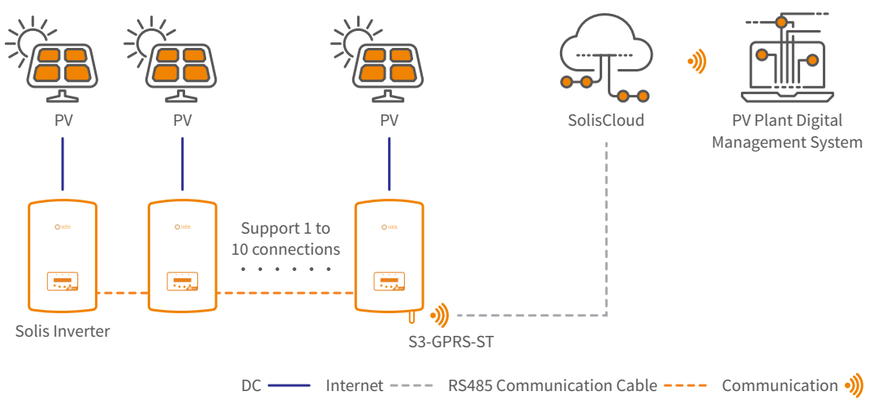

DATASHEET S3-GPRS-ST

Models	S3-GPRS-ST
Communication	
Supported device type	Solis inverter
Number of connected inverters (1)	≤10
Data collection intervals	5 minutes
Status indicator	3 LED Indicator Lights
Communication interface	External 4-Pin Port
Wireless communication	850/900/1800/1900 MHz
Configuration method	APP/WEB
Electrical	
Operating voltage	DC 5V(+/-5%)
Operating power consumption	≤5 W
Environment	
Operating ambient temperature range	-30 ~ +65°C
Operating humidity	5%-95%, relative humidity, non-condensing
Storage temperature	-40 ~ +70°C
Storage humidity	< 40%
Max. operation altitude	4000 m
Protection degree	IP65
Mechanical	
Dimensions (L*W*H)	133*44*44 mm
Installation method	Externally Insert + Twist Lock
Weight	85 g
Others	
Certification	CE

(1) Inverters must first be hand-in-hand connected by RS485.

S2-RF-LINK

Solis Data Loggers

Solis box type (gateway) + stick type (terminal) monitoring data collector, the terminal uses RS485 communication to connect to the inverter, the gateway uses wired Ethernet to connect to the home router, and the gateway and terminal are connected through RF data to realize automatic networking. The equipment is connected to the gateway automatically, free of wiring and wireless network configuration; it aims to realize a stable and intelligent operation and maintenance management plan for users.

Features:

- Support RF communication
- Fault alarm, real-time monitoring
- RESET button, one key to send data, convenient debugging
- Support Bluetooth nearby connection and debugging
- Status indicator, easy to display working status
- One-key assignment of inverter address, efficient and labor-saving
- RF communication is more stable and has a wider range

S2-RF-ST-4Pin S2-RF-Gateway

S2-RF-ST-USB S2-RF-Gateway

Intelligent Monitoring Solution - S2-RF-LINK

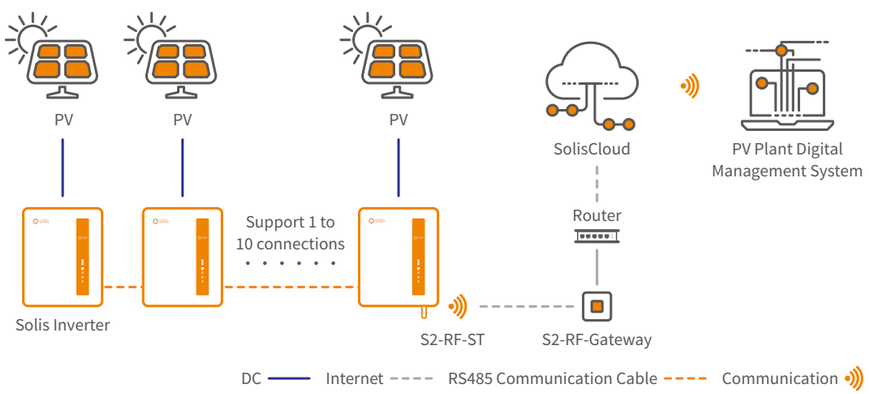

DATASHEET S2-RF-LINK

Models	S2-RF-ST		S2-RF-Gateway
Communication			
Supported device type	Solis inverter		/
Number of connected inverters [1]	≤10		/
Data collection intervals	5 minutes (adjustable: 1-15 minutes)		/
Communication interface	External 4-Pin Port	External USB Port	/
Configuration method	APP/WEB		/
Data interface	/		Adaptive 10/100 Mbps
Working frequency	915 MHz / 868 MHz		
Serial communication speed	9600 bps		
Effective communication distance	200 (in free-field conditions)		
Electrical			
Operating voltage	DC 5 V (+/-5%)		
Operating power consumption	≤5 W		
Environment			
Operating ambient temperature range	-25 ~ +65°C		
Operating humidity	5%-95%, relative humidity, non-condensing		
Storage temperature	-40 ~ +70°C		
Storage humidity	< 40%		
Max. operation altitude	4000 m		
Protection degree	IP65		/
Mechanical			
Dimensions (L*W*H)	128*50*34 mm (4Pin)	115*50*34 mm (USB)	90*90*23 mm
Installation method	Externally Insert + Twist Lock (4Pin)	Externally Insert + Tab Lock (USB)	/
Weight	79 g (4Pin)	65 g (USB)	60 g
Others			
Certification	CE, RoHs, Reach		

(1) Inverters must first be hand-in-hand connected by RS485.

Preliminary

S3-Logger

Solis Data Loggers

S3-Logger is a data acquisition and protocol conversion device applied to PV equipment in PV power plants, which can support access of meters, weather stations and other equipment.

Features:

- Support data connection to local monitoring system
- Support a variety of communication protocols
- One-key address allocation and EPM function
- Support electricity meters, weather stations and other equipment access
- Inverter remote upgrade

S3-Logger

Intelligent Monitoring Solution - S3-Logger

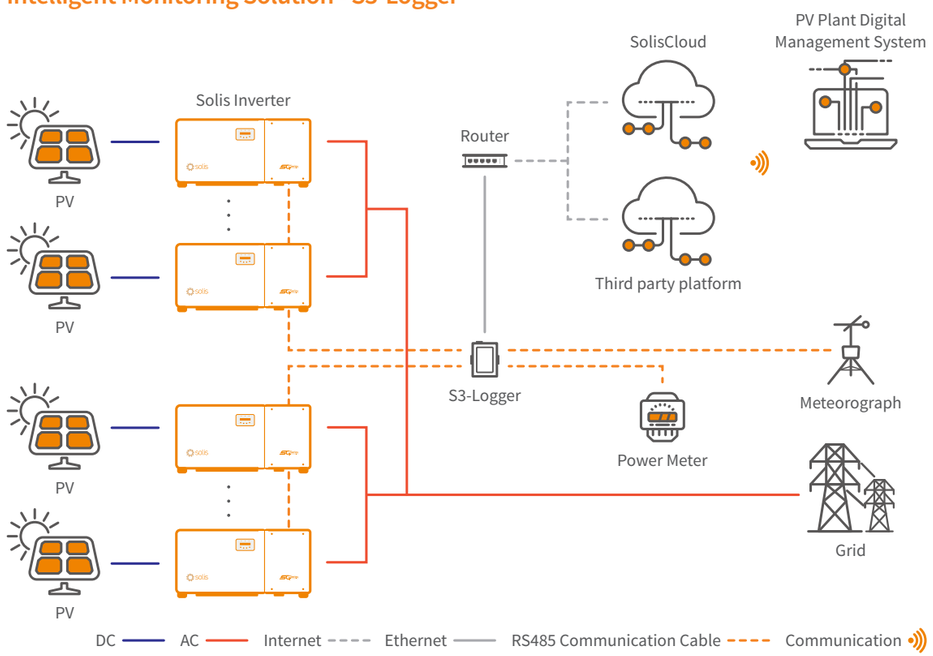

DATASHEET

S3-Logger

Models	S3-Logger	S3-Logger-EPM
Communication		
Supported device type	Solis inverter	
Number of connected inverters (1)	Each RS485 PORT≤15	
Data collection intervals	5 minutes	
Status indicator	2 LED Indicator Lights	
RS485	COM × 4, 1200~19200 bps, communication distance ≤1000 m	
Ethernet communication	LAN × 1, 10/100Mbps adaptive, communication distance ≤100 m	
Zero power output	/	Yes
Communication Protocol		
RS485	Modbus-RTU, IEC60870-5-103, DLT645	
Ethernet	Modbus-TCP, IEC60870-5-104	
Electrical		
AC power supply	100~240 V, 50 Hz / 60 Hz	
DC power supply	9~36 V	
Operating power consumption	5 W@12VDC	
Environment		
Operating ambient temperature range	-40 ~ +80°C	
Operating humidity	≤85%, relative humidity, non-condensing	
Storage temperature	-40 ~ +80°C	
Max. operation altitude	4000 m	
Mechanical		
Dimensions (L*W*H)	89*121*27 mm	
Protection degree	IP20	
Installation method	Rail Mounting, Desktop installation	
Others		
Certification	CE, RoHS	

(1) Inverters must first be hand-in-hand connected by RS485.

Matching Instructions

Type	Manufacturer	Model		Connection method	Special note
Meteorograph	Jinzhou Sunshine	PC-4		RS485 connects to the P3 port on the S3-Logger	1. In addition to the above device models, the newly-matched models will continue to be updated; 2. If you need to match new meteorological or meter devices, please provide manuals, specifications, and communication protocols; 3. To match the new device, development time is about 2 weeks and the final delivery of the new firmware will be upgraded on site.
	Rainwise	PVmet-75	PVmet-200		
	SevenSolar	3S-IS V7			
	Ingenieurburo	Si-RS485TC-2T			
Meter	Acrel	DTSD1352	ADL3000-E-B	RS485 connects to the P4 port on the S3-Logger	
	Janitza	UMG-96RM	UMG-512		
	Mikro	RX380			
	MEATROL	EM231			
	Schneider	PM5100	iEM3000		
		iEM3255	EM6400		

Contact Us

HQ
+86 574 6580 2188
sales@ginlong.com service@ginlong.com
188 Jinkai Road, Binhai Industrial Park, Xiangshan, Ningbo, Zhejiang, 315712, China

UK
+44 113 328 0870 (sales) +44 1514 536515 (service)
europesales@solisinverters.com euservice@solisinverters.com
1 Church Street Bootle Liverpool, L20 1AF, UK

Mexico
+86 574 6580 2188 (sales) +52 81 3434 2092 (service, WhatsApp only)
sales@ginlong.com service.latam@solisinverters.com
Monterrey, Mexico

South Africa
+27 010 222 0181
sales@ginlong.com saservice@solisinverters.com
1487 Seilskip Road, Laser Park, Honeydew, Roodepoort, Gauteng, South Africa

Poland
+44 113 328 0870 (sales) +48 221 031 937 (service)
europesales@solisinverters.com plservice@solisinverters.com
Warsaw, Poland

Spain (EU Service Center)
+34 914 430 810 (sales) +34 919 495 286 (service Spain)
europesales@solisinverters.com (sales)
spservice@solisinverters.com (service Spain)
euservice@solisinverters.com (service EU)
Calle de Serrano, 240 - 1ª planta 28016 Madrid, Spain

Korea
+82 32 822 2188 (sales) +82 10 7924 2198 (service)
krsales@solisinverters.com (sales & service)
#A-615,Smart Valley, 30 Songdomirae-ro, yeonsu-gu, Incheon, Korea

Malaysia
+86 574 6580 2188 (sales) +60 0162323512 (service)
sales@ginlong.com service@ginlong.com
Jalan Kelang Lama,58200 Kuala Lumpur, Malaysia

Australia
+61 3 8555 9516
sales@solisinverters.com.au service@solisinverters.com.au
No. 5 / 109 Tulip Street, Cheltenham, Vic. 3192 Australia

Vietnam
+84 98 316 8126 (sales) +84 24 7109 7614 (service)
sales@ginlong.com service@ginlong.com
38/21 Đ. Lồ Ô, Xã Bình Thắng, Dĩ An, Bình Dương, Việt Nam

India
+91 224 9744 251 (sales) +91 90906 09037 (service)
indiasales@ginlong.com inservice@solisinverters.com
104, wing -A, 1st floor, Techno1 City Premises Plot no. X-4/1 Mahape Navi Mumbai- 400710, India

USA/ Canada
+1 866 438 8408
ussales@solisinverters.com usservice@solisinverters.com
12333 Sowden Rd Ste B #30327, Houston TX 77080 USA

Benelux (Belgium, Netherlands, Luxembourg)
+31 85 048 1300
benelux@solisinverters.com (sales & service)
beservice@solisinverters.com (service Belgium)
nlservice@solisinverters.com (service Netherlands)
Westerwerf 3-D, 1911 JA Uitgeest, Nederland

Chile
+86 574 6580 2188 (sales)
+52 811 500 2841 (service) +52 33 1751 0488 (service)
sales@ginlong.com service@ginlong.com

Thailand
+86 574 6580 2188 (sales) +66 099 050 5595 (service)
sales@ginlong.com service@ginlong.com
Vibhavadi Rangsit Road, Chatucha, Bangkok 10900, Thailand

Brazil
+55 19 996133803 (sales) +55 19 999618000 (service, WhatsApp)
sales@ginlong.com service@ginlong.com
Rua James Clerk Maxwell, nº 280, Unidade 07, Empresa Solis, Bairro Parque Tecnológico Techno Park, Condomínio Empresarial Aztech, Campinas, SP, CEP 13.069-380

Germany
+49 800 5369147 (service)
europesales@solisinverters.com deservice@solisinverters.com

Sweden
+46 761 472 195 (sales) +46 850 282 408 (service)
europesales@solisinverters.com seservice@solisinverters.com
Åkersberga, Sweden

Romania
+40 373 808 894 (service)
europesales@solisinverters.com euservice@solisinverters.com
Brasov, Romania

Myanmar
+86 574 6580 2188 (sales) +95 94 302 3335 (service)
sales@ginlong.com service@ginlong.com
No (10) Sagwar Pin Street, Kyimyindaing, Yangon City

Ireland
+353 1592 0312 (service)
europesales@solisinverters.com euservice@solisinverters.com
Dublin, Ireland

Austria
+43 800 070 634(service)
europesales@solisinverters.com deservice@solisinverters.com
Vienna, Austria

Greece
+30 8000000227 (service)
europesales@solisinverters.com grservice@solisinverters.com
Athens, Greece

Lithuania
+370 609 99959 (service)
europesales@solisinverters.com ltservice@solisinverters.com

Philippines
+86 574 6580 2188 (sales) +63 2 8372 7945 (service)
sales@ginlong.com phservice@solisinverters.com
40 Nadurata St. Zone 5 Brgy. 53 Grace Park West , Caloocan City, Metro Manila, Philippines

Pakistan
+86 574 6580 2188 (sales)
+92 304 1119118 (service) +92 334 1171144 (service, WhatsApp)
sales@ginlong.com service@ginlong.com
Plot#07, Opposite Usman Carpet, Defence Road, Lahore, Pakistan

Singapore
+86 574 6580 2188 (sales) +60 016 232 3512 (service)
sales@ginlong.com service@ginlong.com

Turkey
+90 545 651 3541
europesales@solisinverters.com euservice@solisinverters.com
Istanbul, Turkey

Indonesia
+86 574 6580 2188 (sales) +62 081385918539 (service)
sales@ginlong.com service@ginlong.com
Kunciran Pinang, Tangerang. Indonesia

France
+34 914 430 810 (sales) +33 971 078 736 (service)
europesales@solisinverters.com euservice@solisinverters.com
Paris, France

Portugal
+351 80 050 6138 (service)
europesales@solisinverters.com poservice@solisinverters.com
Lisbon, Portugal

Sri Lanka
+86 574 6580 2188
sales@ginlong.com service@ginlong.com
Colombo, Sri Lanka

Switzerland
+41 800 563 032 (service)
europesales@solisinverters.com deservice@solisinverters.com
Zurich, Switzerland

Italy
+39 02 8295 7352
europesales@solisinverters.com itservice@solisinverters.com