Honeywell Controlinks interface to RM780xxL

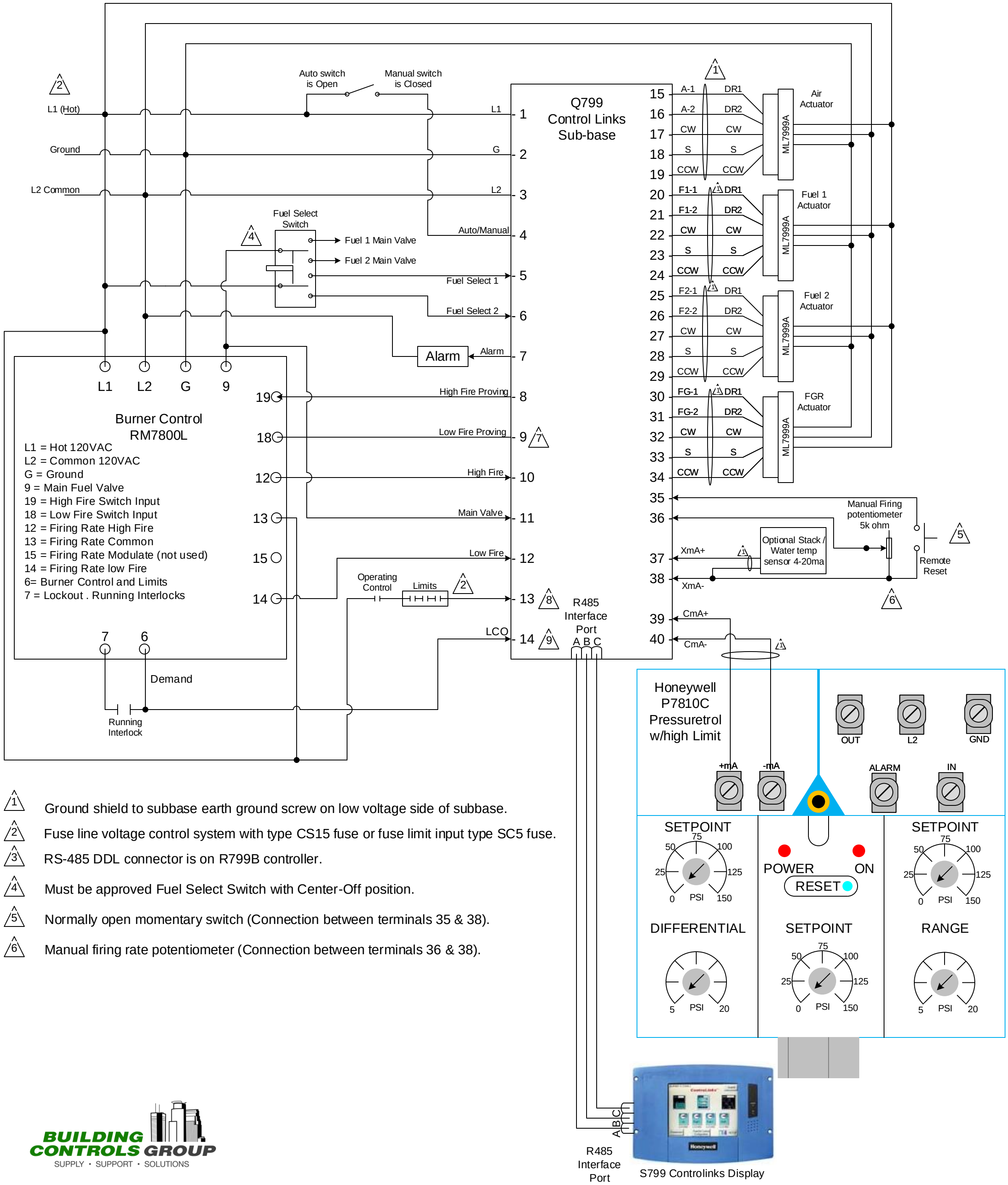

1. Ground shield to subbase earth ground screw on low voltage side of subbase.
2. Fuse line voltage control system with type CS15 fuse or fuse limit input type SC5 fuse.
3. RS-485 DDL connector is on R799B controller.
4. Must be approved Fuel Select Switch with Center-Off position.
5. Normally open momentary switch (Connection between terminals 35 & 38).
6. Manual firing rate potentiometer (Connection between terminals 36 & 38).

BUILDING CONTROLS GROUP
SUPPLY • SUPPORT • SOLUTIONS