Honeywell Controlinks interface to fireye

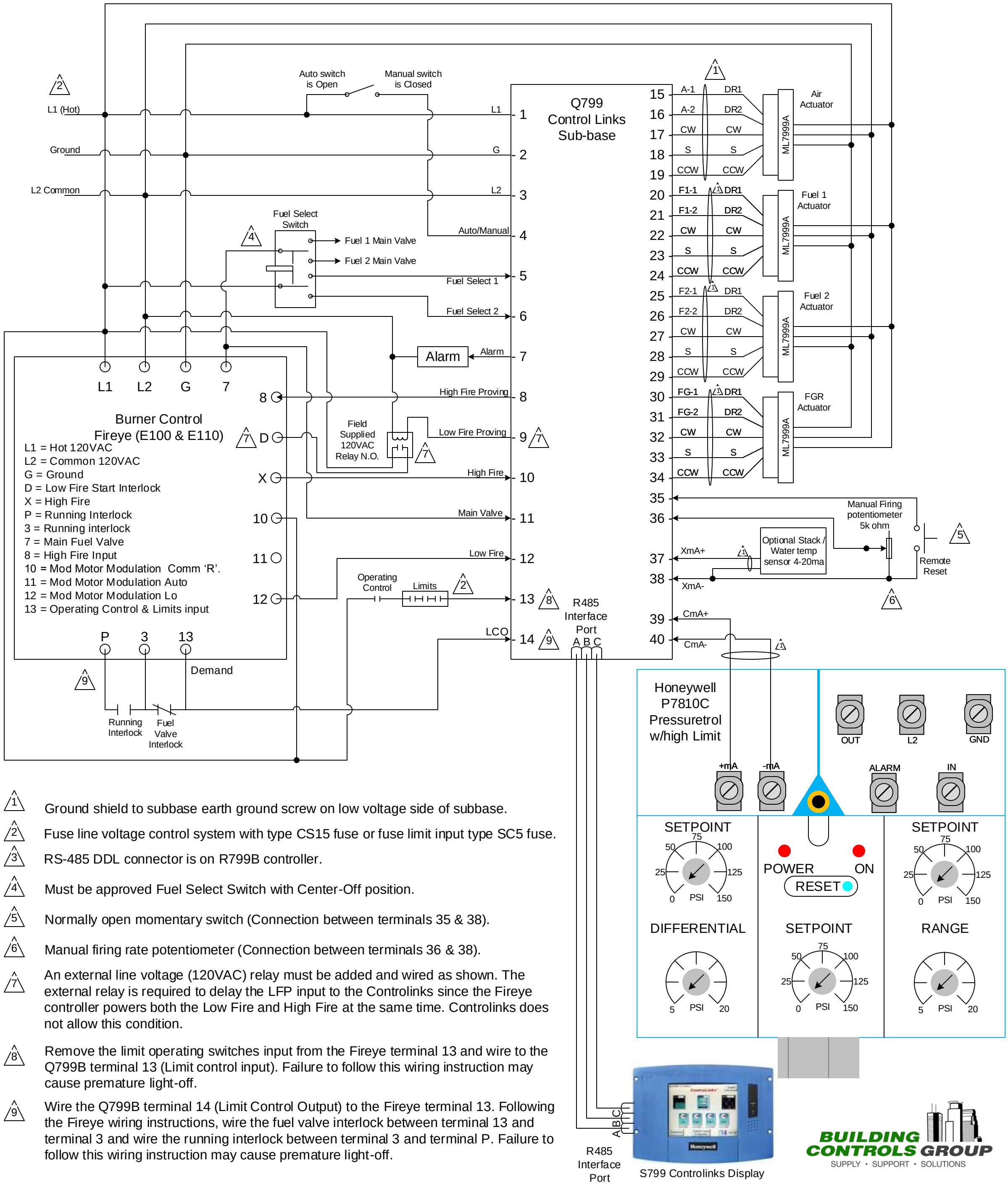

1. Ground shield to subbase earth ground screw on low voltage side of subbase.
2. Fuse line voltage control system with type CS15 fuse or fuse limit input type SC5 fuse.
3. RS-485 DDL connector is on R799B controller.
4. Must be approved Fuel Select Switch with Center-Off position.
5. Normally open momentary switch (Connection between terminals 35 & 38).
6. Manual firing rate potentiometer (Connection between terminals 36 & 38).
7. An external line voltage (120VAC) relay must be added and wired as shown. The external relay is required to delay the LFP input to the Controlinks since the Fireye controller powers both the Low Fire and High Fire at the same time. Controlinks does not allow this condition.
8. Remove the limit operating switches input from the Fireye terminal 13 and wire to the Q799B terminal 13 (Limit control input). Failure to follow this wiring instruction may cause premature light-off.
9. Wire the Q799B terminal 14 (Limit Control Output) to the Fireye terminal 13. Following the Fireye wiring instructions, wire the fuel valve interlock between terminal 13 and terminal 3 and wire the running interlock between terminal 3 and terminal P. Failure to follow this wiring instruction may cause premature light-off.

BUILDING CONTROLS GROUP
SUPPLY • SUPPORT • SOLUTIONS