FA-C-225-12-5"
FORCE: 225-Lbs (1000N)

Actuator Wiring		
Color	Brown	Blue
Extend	-	+
Retract	+	-

TABLE		
NO.	Item	Detail
1	Model No.	FA-C-225-12-5"
2	Stroke	127±3mm [5 in]
3	Voltage	12V DC
4	No Load Speed (mm/s)	10mm/s±10%
5	Full Load Speed (mm/s)	
6	Max Load	225-Lbs (1000N)
7	No Load Current (mA)	≤
8	Full Load Current (mA)	≤4.1A
9	Weight	2.24lbs (9.96N)
10	Wire connector	tinned bare wires
11	Limit switches	
12	IP Grade	IP54
13	Front mounting end	thru hole Ø6.1mm [Ø.24 in]
14	Rear mounting end	thru hole Ø6.1mm [Ø.24 in]

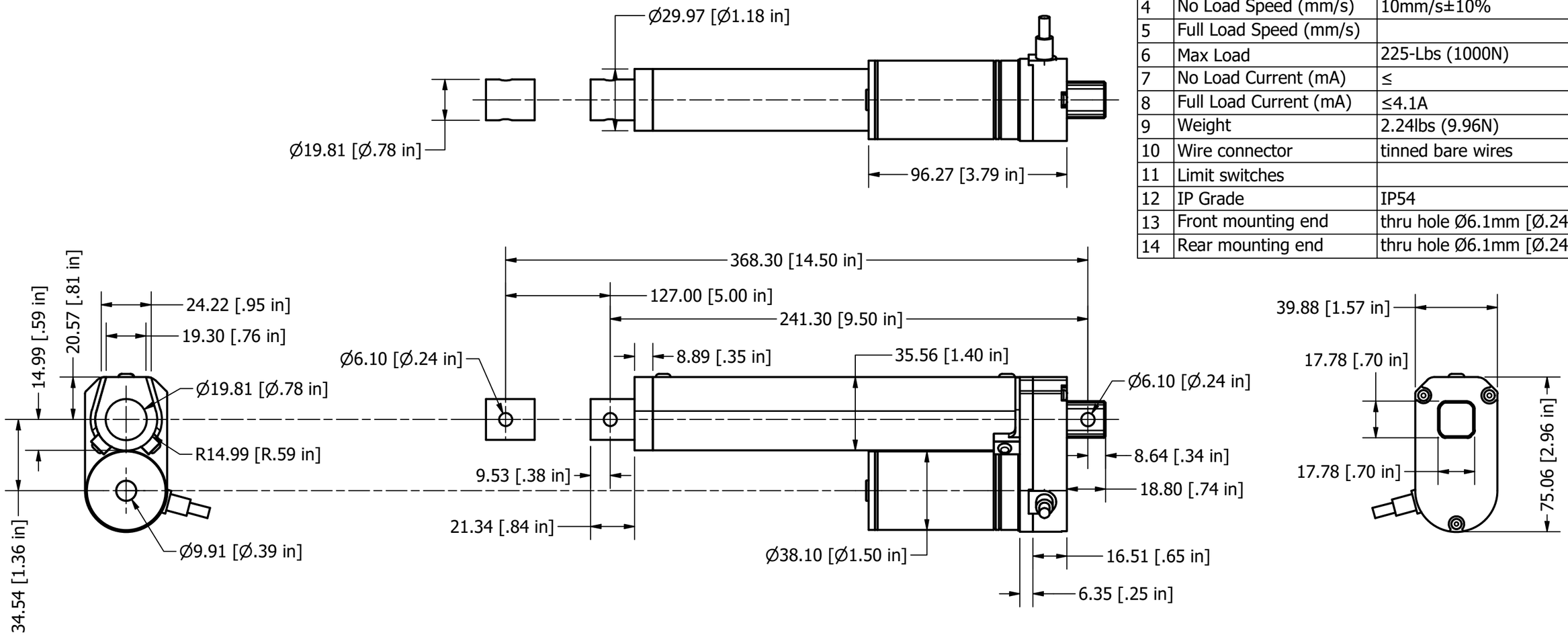

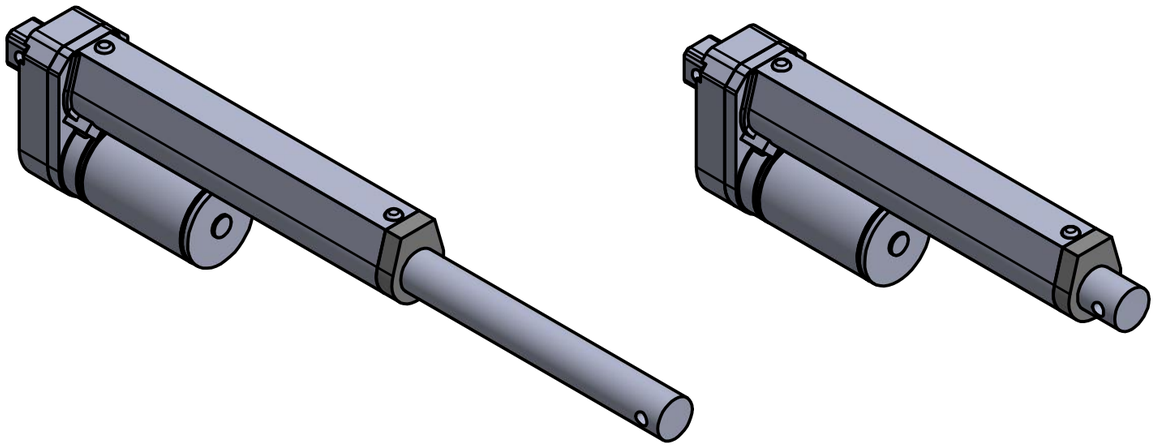

FIRGELLI AUTOMATIONS ©

SIZE	DWG NO	REV
A3	FA-C-225-12-5"	
SCALE 1 / 2	SHEET 1 OF 1	