REVISIONS				
REV.	DESCRIPTION	BY	DATE	ECR/ECN#
A	ADDED REVERSE SIDE VIEW	WJH	3/22/2021	

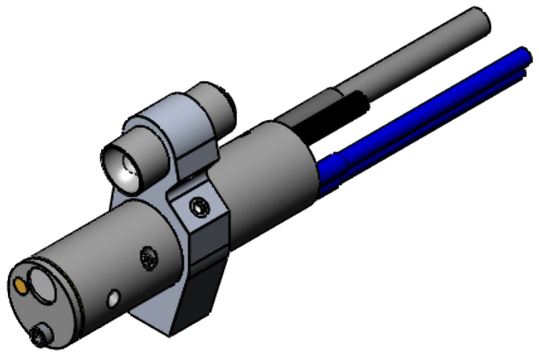

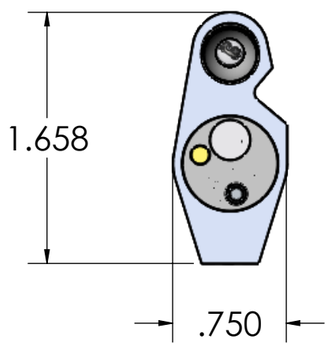

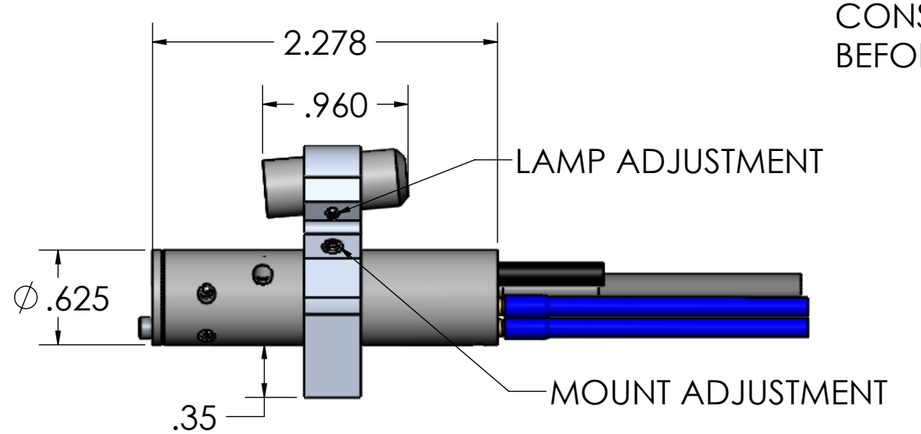

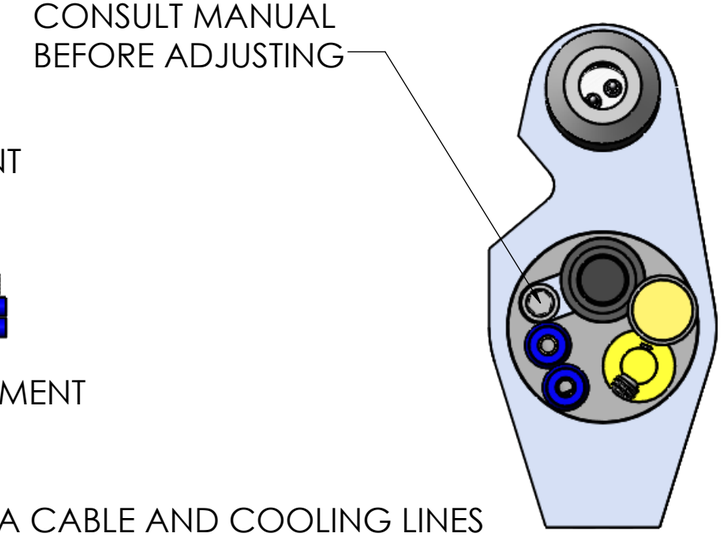

SCALE 2:1

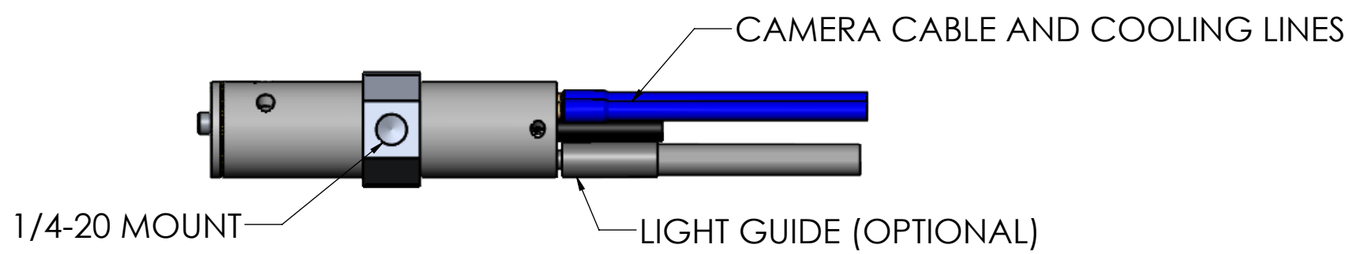

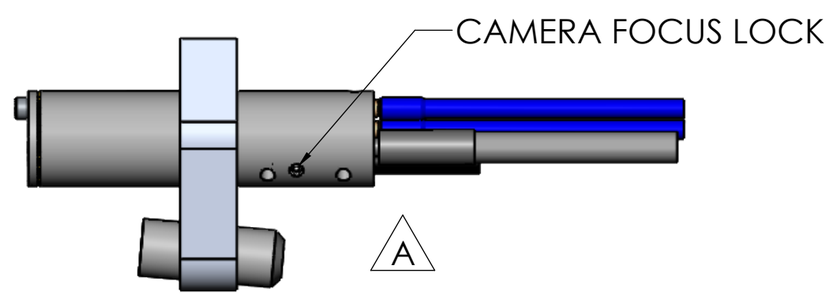

SEE CHART

SHEET 1 OF 1

© 2021 InterTest Inc.

PROPRIETARY AND CONFIDENTIAL

THE INFORMATION CONTAINED IN THIS DRAWING IS THE SOLE PROPERTY OF INTERTEST, INC. ANY REPRODUCTION IN PART OR AS A WHOLE WITHOUT THE WRITTEN PERMISSION OF INTERTEST, INC. IS PROHIBITED.

E-mail mail@intertest.com / http://www.intertest.com

INTERTEST NDT & RVI

303 Rt 94 Columbia, NJ 07832 (908)496 8008 Fax (908) 496-8004

UNLESS OTHERWISE SPECIFIED DIMENSIONS ARE IN INCHES

.XX	.XXX	ANGLES
±.02	±.005	±0° 30'

MATERIAL N/A

FINISH N/A

APPROVALS		DATE
DRAWN	MM	11/25/20
CHECKED		
CAD FILE: 163599		SCALE 1:1

Weld-i -625 HD

SIZE B | EM17427-28 | REV. A