RZB ENERGY
Manual

RZB ENERGY

THINK
OUTSIDE THE
WALL
Box

Table of contents

1. About this document....3
1.1 Service....3
1.2 Warnings....3
1.3 Symbols used....4
2. Safety instructions....4
2.1 Target groups....4
2.2 Intended use....4
2.3 Basic safety instructions....5
2.3.1 Qualification....5
2.3.2 Proper condition....5
2.3.3 Compliance with the duty of supervision....6
2.3.4 Compliance with the permissible ambient conditions....6
2.3.5 Proper use of the cable....6
2.3.6 Proper use of the socket outlet....6
2.3.7 Keeping order....7
3. Product description....7
3.1 Scope of delivery....7
3.2 Type plate....8
3.3 Design of the appliance....8
3.4 Optional features....12
3.5 Device versions....12
3.7 Energy meter....12
3.8 Status LED....13
4. Installation....14
4.1 Site selection....14
4.2 On-site installation....14
4.2.1 Power supply line....14
4.2.2 Protection....14
4.2.3 Laying the supply line....15
4.3 Open device....15
4.4 Mounting the device....16
4.6 Set up three-phase device for single-phase operation....18
4.7 Limit the charging current....18
4.8 Close device....18
5. Commissioning....19
5.1 Switch on the device....19
5.2 Test of the device....19
6. Operation....19
6.1 Charge vehicle....19
6.2 Authorization....20
6.2.1 Start the charging process....20
6.2.2 End charging process....20
6.3 Check residual current circuit breaker....21
6.3.1 Reconnect residual current circuit-breaker and miniature circuit-breaker....21

6.4 Control elements....21
6.4.1 RFID.... 21
6.4.2 Socket....21
6.4.3 Charging cable....21
7. Maintenance and repair....22
7.1 Maintenance.... 22
7.2 Cleaning....23
8. Fault rectification....23
8.1 Spare parts....24
8.2 Emergency release of the charging plug.... 24
9. Programming.... 25
9.1 Access to charge controller.... 25
9.2 WBM dashboard and login.... 27
9.2.2 Switch language.... 28
9.2.3 Login....28
9.2.4 User roles.... 29
9.2.5 Changing the password....29
9.3 Configuration of the charging park: Charging stations....30
9.3.1 Charging park / Charging point details / Status.... 30
9.3.2 Setting the charging current....36
9.4 Set up an Internet connection....36
9.5 Integrate and activate SIM card....37
9.6 OCPP settings.... 39
9.7 Local release list without backend....40
9.8 Solutions for load release.... 42
9.9 Charging park / load management.... 43
9.9 Time and date....45
9.10 Software update....45
10. Decommissioning and disassembly....47
11. Storage....47
12. Waste disposal....48
13. Glossary.... 48

1. About this document

The products, hereinafter referred to as "charging station" or "device", are available in different versions. Please refer to the type plate for the variant of your device. This document refers to the following variants of the device:

- Lupalo / Bocaro Basic,
- Lupalo / Bocaro Smart,
- Lupalo / Bocaro Pro.

These instructions are addressed to both the operator and the qualified electrician. It contains information on safe operation, installation and commissioning. Certain activities may only be carried out by a qualified electrician and are marked accordingly.

All additional documentation for the use of the device must be observed and kept in a safe place for future reference. These documents must be passed on to the subsequent operator.

The German version of these instructions is the original instructions; instructions in other languages are translations.

Copyright© 2023 RZB Rudolf Zimmermann, Bamberg GmbH

1.1 Service

If you have any questions about the appliance, please contact your service partner.

To contact RZB directly, please use the form under "Contact" on https://www.rzb-energy.de/pages/contact

Please have the following information ready to ensure that your request is processed quickly:

- Type designation / serial number (see type plate on the charging station)

At www.rzb-energy.de you will always find the latest information and frequently asked questions about the charging stations and other topics relating to e-mobility.

1.2 Warnings

Warning of injury to persons

⚠ Danger

This warning indicates an immediate danger that can lead to death or serious injury.

⚠ Caution

This warning indicates a dangerous situation that could lead to death or serious injury.

Warning of property damage

Attention

This warning indicates a dangerous situation that can lead to material damage.

1.3 Symbols used

This symbol indicates activities that may only be carried out by a qualified electrician.

This symbol indicates an important note.

This symbol indicates useful additional information.

2. Safety instructions

2.1 Target groups

Operators

As the operator, you are responsible for the device. You are responsible for the intended use and safe use of the charging station. This also includes instructing persons who use the charging station.

As an operator without specialist electrical training, you may not carry out any activities that require a qualified electrician.

Qualified electricians

As a qualified electrician, you have a recognized electrical engineering qualification. Based on this specialist knowledge, you are authorized to carry out the electrical work required in these instructions.

Requirements for the qualified electrician:

- Knowledge of general and specific safety and accident prevention regulations
- Knowledge of electrotechnical regulations
- Knowledge of national regulations
- Ability to recognize risks and avoid potential hazards

2.2 Intended use

Depending on the expansion stage, the charging station is suitable for use in private or semi-public areas (restricted access, e.g. private or company parking lot, depot) or for use in public areas (unrestricted access, e.g. marketplace).

The charging station is used exclusively for charging electric vehicles.

- Mode 3 charging according to IEC 61851-1.
- Plugs and sockets according to IEC 62196.

The charging station is intended exclusively for stationary installation. Vehicles with gassing batteries must not be charged.

If the charging station has two charging points (depending on the expansion stage), these can be operated simultaneously.

In some countries, there are legal regulations that require additional protection against electric shock. Country-specific regulations must always be checked and complied with.

The device may only be operated in compliance with all international and national regulations. The following international regulations and the respective national implementation must be observed:

- IEC 61851-1
- IEC 61851-21-2
- IEC 62196-1
- IEC 60364-7-722
- RoHS Directive 2011/65/EU
- REACH (EC) No 1907/2006

Read and observe these instructions and all additional documentation for using the device.

Only the intended use of the charging station guarantees its safe use. Any modification to the device or other use of the device is contrary to its intended purpose and is therefore not permitted.

The responsibility for the intended use and safe use of the charging station lies with the operator. RZB Rudolf Zimmermann, Bamberg GmbH, accepts no liability for the consequences of improper use.

2.3 Basic safety instructions

2.3.1 Qualification

Some of the activities in these instructions require specialist knowledge of electrical engineering. If these are carried out without the necessary knowledge and qualifications, serious accidents and death may occur.

- Only carry out activities for which you are qualified and instructed.
- Observe the information on qualified electricians in these instructions.

2.3.2 Proper condition

Damaged device

If the charging station is damaged or defective (e.g. defective housing, missing components), people can be seriously injured by electric shock. The following points must therefore be observed:

- Avoidance of collisions and improper handling
- Preventing further use of the device in the event of defects / damage,
- Marking a damaged device to prevent it from being used by other persons
- Immediate repair of the damage by a qualified electrician.

Improper maintenance

Improper maintenance can impair the operational safety of the charging station and thus cause accidents. This can result in serious injury and death. The following points minimize the risk of accidents:

- Observe the maintenance schedule,
- Appointment of a qualified electrician for regular maintenance (every six months or annually).

2.3.3 Compliance with the duty of supervision

People (especially children) and animals pose a particular danger to themselves and others, as they are unable or only partially able to assess potential dangers.

- Prevent access to charging cable/station

2.3.4 Compliance with the permissible ambient conditions

Failure to comply with the permissible ambient conditions may impair the functionality and operational safety of the appliance. This can lead to accidents and serious personal injury. The following ambient conditions must be observed and taken into consideration when selecting a suitable location:

- Keep explosive and highly flammable substances away from the charging station area and do not use the charging station in potentially explosive areas (e.g. gas filling stations).
- Observe the ambient temperature range: -25 to +40 °C,
- Avoidance of large temperature fluctuations,
- Ensure adequate ventilation of the device (no installation in niches, do not bury the mast) not buried) and avoidance of heat build-up,
- Maintain a sufficient distance between the charging station and possible heat sources,
- No installation in the immediate vicinity of irrigation systems,
- No installation in recessed positions (risk of flooding).

2.3.5 Proper use of the cable

Improper handling of the charging cable can result in hazards such as electric shock, short circuit or fire. The following points must therefore be observed:

- No touching of the contact pins,
- No use of adapter plugs or extension cables
- Avoidance of kinks, sharp edges, loads and impacts,
- Avoidance of accumulation / knotting of the charging cable
- Complete unwinding of the charging cable during charging,
- Only pull the charging cable out of the charging socket directly at the plug,
- Use of the protective flap, keeping small animals away e.g. from the charging cable
- Avoidance of tensile stress on the charging cable,
- No need to lay the charging cable on the floor, avoiding dirt deposits at the contact points.

2.3.6 Proper use of the socket outlet

Improper handling of the charging socket can result in hazards such as electric shock, short circuit or fire. The following points must therefore be observed:

- No touching of the contact pins,
- No use of adapter plugs or extension cables,
- Complete unwinding of the charging cable during charging,
- Do not plug anything into the charging socket,

- Do not remove the socket cover,
- Check that the charging cable and socket are clean and clean before plugging in.

2.3.7 Keeping order

A charging cable lying around is a tripping hazard that must be prevented by taking the following measures:

- Store the charging cable properly after charging, e.g. use the cable hanger
- No placing objects on the charging station

3. Product description

Due to customer and country-specific requirements, the charging stations may differ, so that there may be visual differences with the illustrations in these instructions depending on the version.

3.1 Scope of delivery

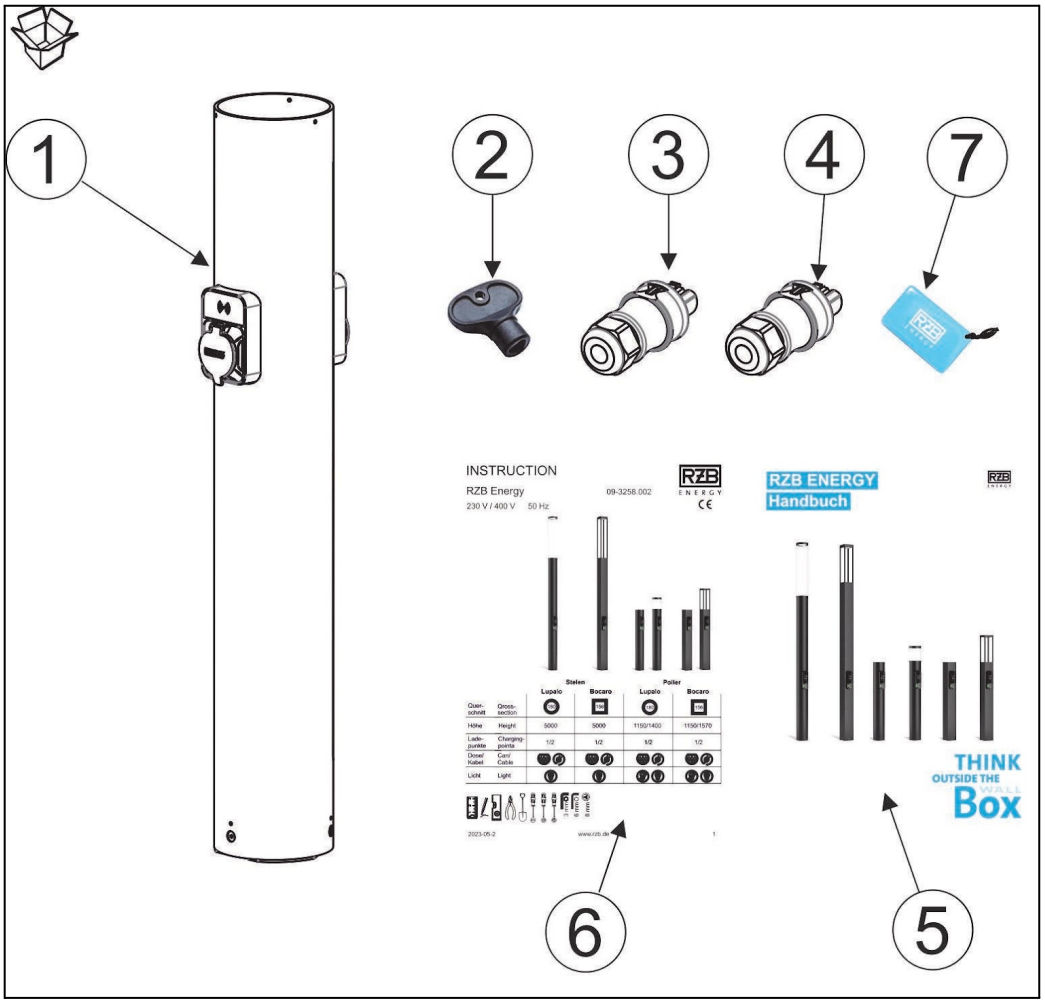

1. Charging column
2. Triangular wrench
3. Socket Connection luminaire
4. Plug connection luminaire head
5. Operating instructions Manual
6. Quick Guide" installation instructions
7. RFID card

3.2 Type plate

All relevant appliance data can be found on the type plate. The type plate shown below is a sample.

- Observe the type plate on your appliance, which you will find on the bottom part of the housing.

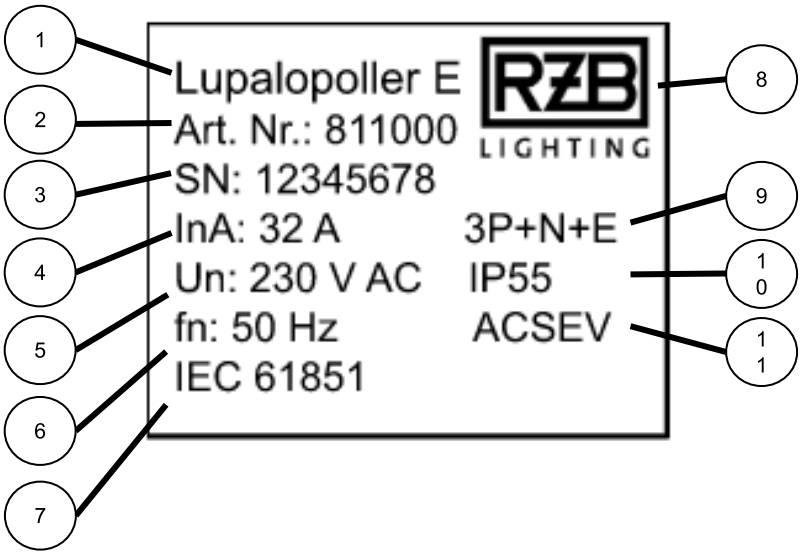

1. Serial name
2. Article number
3. Serial number
4. Rated current
5. Rated voltage
6. Rated frequency
7. Norm
8. Manufacturer
9. Number of poles
10. Protection type
11. Application

3.3 Design of the appliance

The device consists of two units: the charging bollard and the charging unit.
The charging unit is already fitted to the charging bollards on delivery.

Lateral view

1. Charging bollard
2. RFID reader
3. Antenna (optional depending on expansion stage)
4. Socket outlet (single / double)
5. Status LED
6. Service flap
7. Triangular / key lock
8. Fixing screws
9. Base

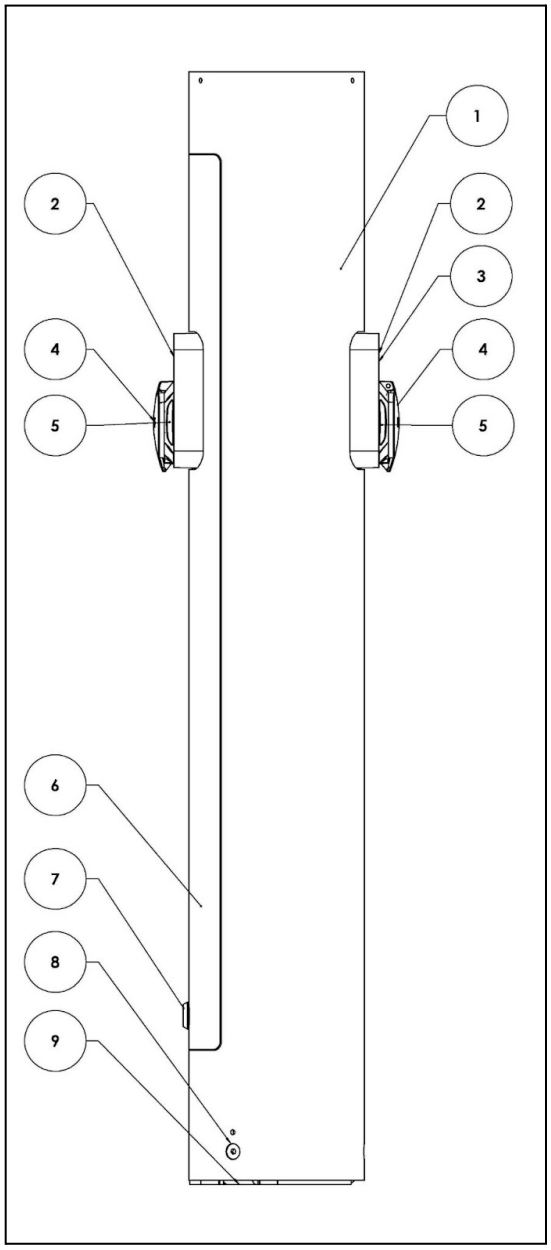

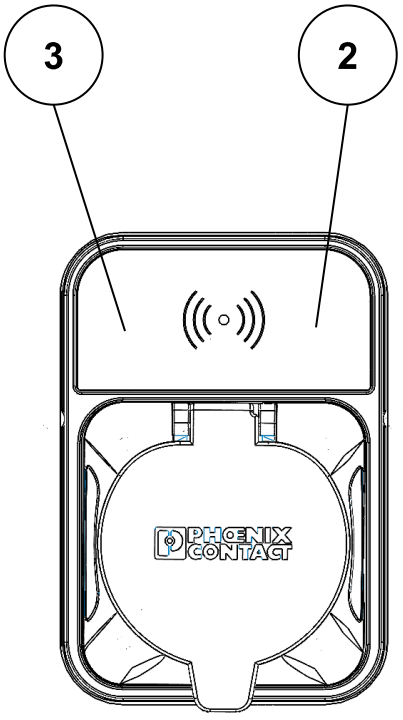

Internal view front panel

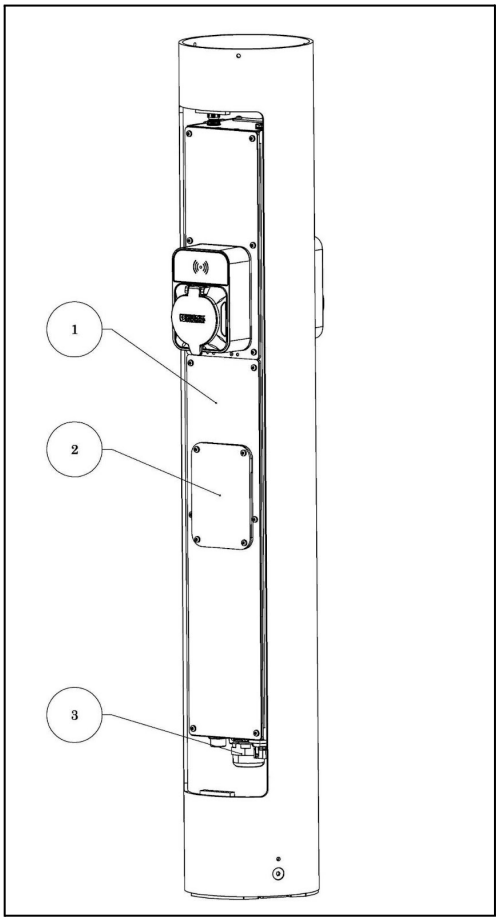

1. Connection cap
2. Inspection window
3. Connection area

Bottom connection area

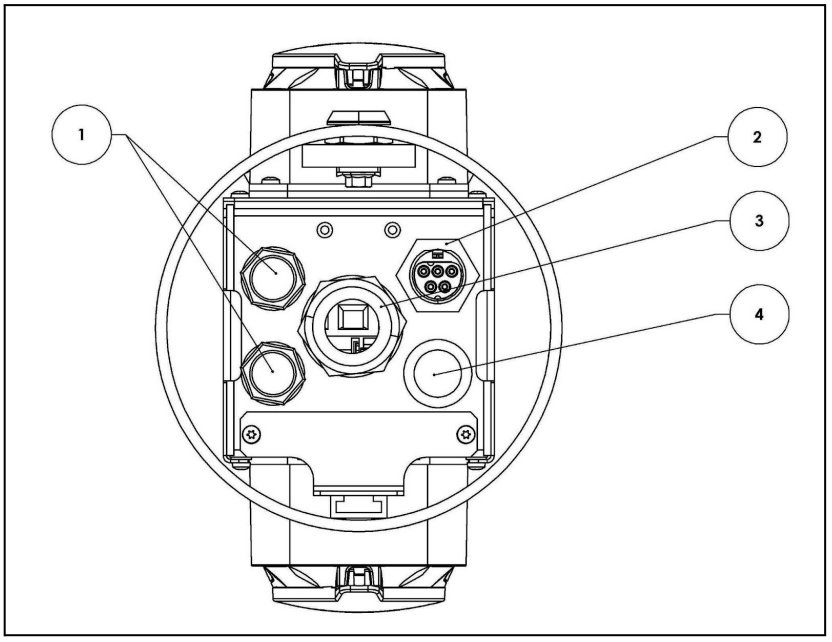

1. LAN connection
2. Luminaire connection
3. Charging unit connection
4. Free input

Inside view

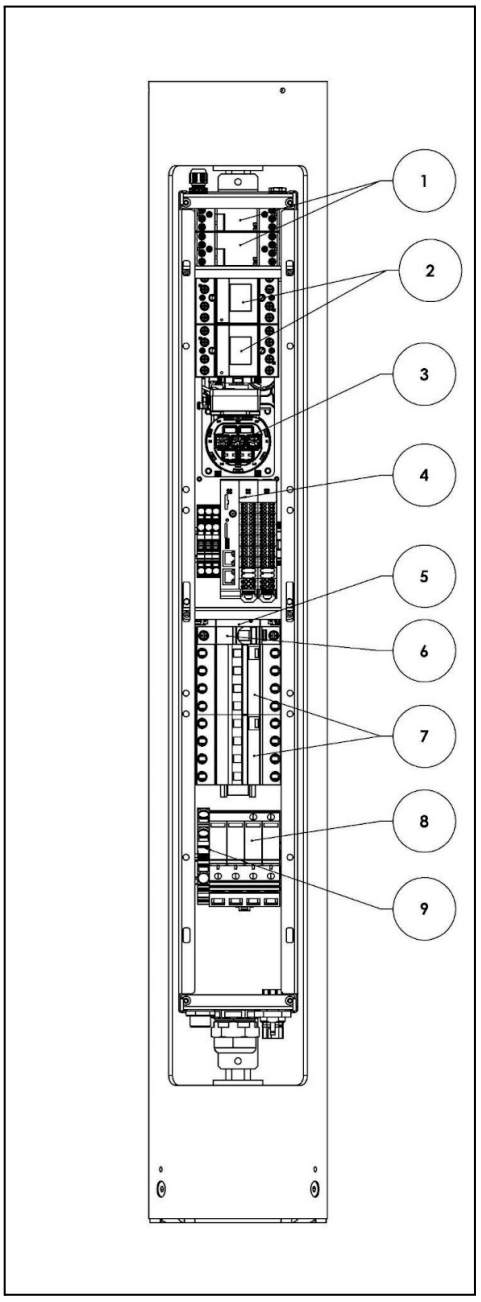

1. Load protection
2. Energy meter (depending on expansion stage)
3. Charging socket
4. Controller
5. Power supply controller
6. Fuse
7. FI/LS (depending on expansion stage)
8. Overload protection (depending on expansion stage)
9. Earthing clamp

3.4 Optional features

	Protection	Operating element	Energy meter
BASIC	RCM	RFID scanner	-
SMART	Personnel and circuit breakers; RCM	RFID scanner; Display	MID-Zähler
PRO	Personnel and circuit breakers; RCM; Surge protection	RFID Scanner; Display; Payment terminal	Energy meter compliant with calibration law

3.5 Device versions

Permanently connected charging cable with type 2 charging connector

These charging stations have a permanently connected charging cable; it is not necessary to use a separate charging cable. They can be used to charge all electric cars equipped with a type 2 plug.

Type 2 charging socket for the use of separate charging cables

These charging stations have a type 2 charging socket for the use of separate charging cables. This can be used to charge all electric cars equipped with a type 2 or type 1 plug.

3.7 Energy meter

The energy consumption (total and current consumption) can be viewed at any time on the dashboard or in the BackEnd APP.

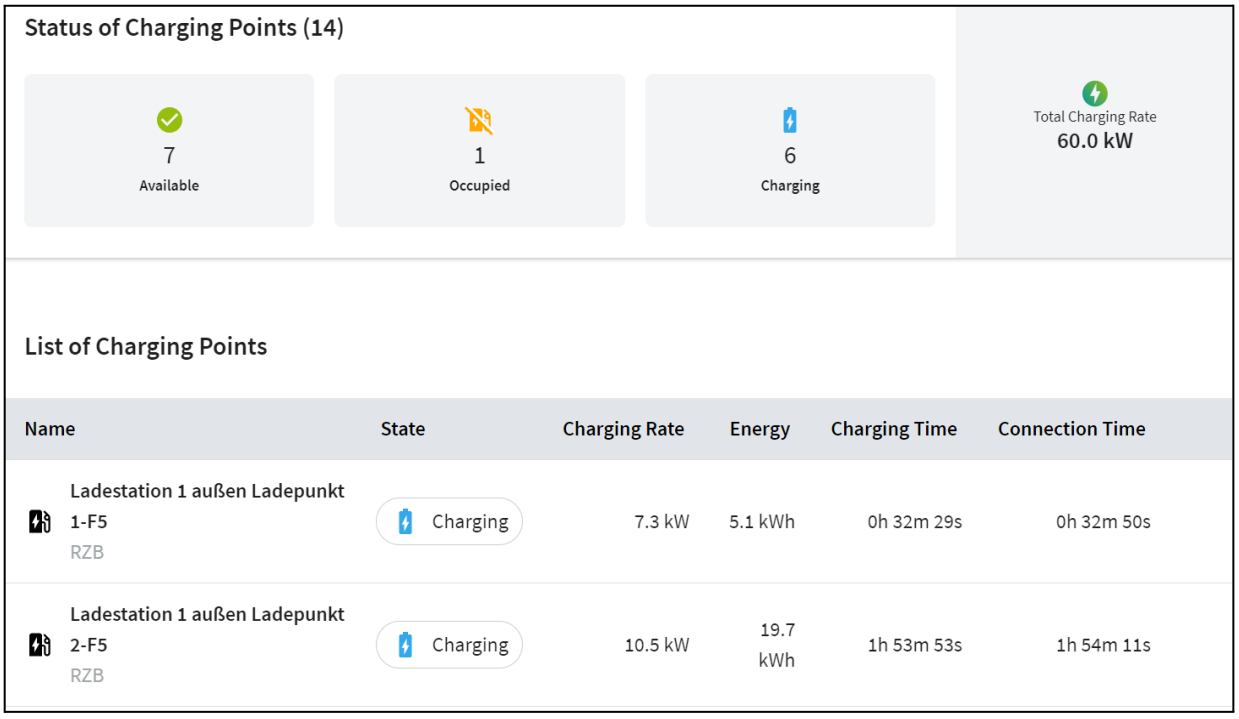

3.8 Status LED

The status LED on the socket indicates the operating status of the charging station. Operational readiness, charging process, waiting time and fault are signaled in green, yellow, blue and red.

	Colour	Status	Description
	green	free and available	The charging station is ready for operation, it is not busy and has no error.
	yellow	busy / waiting	Communication with the vehicle is successful and the charging station is waiting for charging release / or the charging process has been paused.
	blue	charging	The charging process has started or the charging process is running.
	red	error	There is a fault with the charging station, the charging cable or the vehicle. The charging process has been aborted.

4. Installation

The activities in this chapter may only be carried out by qualified electricians.

⚠ Attention

Damage to the charging station due to improper handling
Collisions and impacts as well as improper handling can cause damage to the charging station. The following points must be observed:

- Avoidance of collisions and impacts,
- Use a soft surface to place the charging station on,
- Do not use control elements protruding from the mast as handles during installation..

4.1 Site selection

The charging station is intended exclusively for fixed installation. The following features characterize a suitable location:

- Ensure sufficient proximity between the charging station and the parking space (depending on the charging cable used),
- Observe correspondence between technical data and network data
- Compliance with permitted ambient conditions.

4.2 On-site installation

4.2.1 Power supply line

- Dimensioning of the supply line according to the rated current

When dimensioning the supply line (cross-section and cable type), the following local conditions must be taken into account:

- Laying method,
- Cable coverings,
- Cable length.

4.2.2 Protection

Depending on the expansion stage, the charging station is equipped with a type A residual current circuit breaker (FI) and a miniature circuit breaker (LS) in accordance with the following table.

Variant	FI Typ A	FI Typ A + LS	Surge protection
BASIC	-	-	-
SMART	-	x	-
PRO	-	x	x

Miniature circuit breaker (LS)

With the Basic version, the required circuit breaker must be provided by the customer.

The dimensioning of the circuit breaker must take into account the information on the rating plate, the required charging power and the supply line (cable length, cross-section) to the appliance. National regulations must be observed.

Residual current circuit breaker (FI)

Danger

Risk of injury due to electric shock

All-current sensitive FI switches (type B) must not be installed downstream of pulse current sensitive FI switches (type A). The type A tripping function can be impaired by the type B so that they can no longer switch off even if residual currents occur. The following must be observed:

- Always connect a type B switch before a type A switch.

- Connection of charging stations without internal FI-switches always via separate FI-switches (see also IEC 60364-7-722)
- Devices with integrated FI-switch: delivered with type A,
- Do not connect other circuits to the FI-switch.

For the Basic equipment variants, the required Fi-switch must be provided by the customer.

4.2.3 Laying the supply line

- Bury necessary cables directly on site or lay them in cable ducts
- Notes on the cables: "4.4 Installing the appliance" and "4.5 Electrical connection".

4.3 Open device

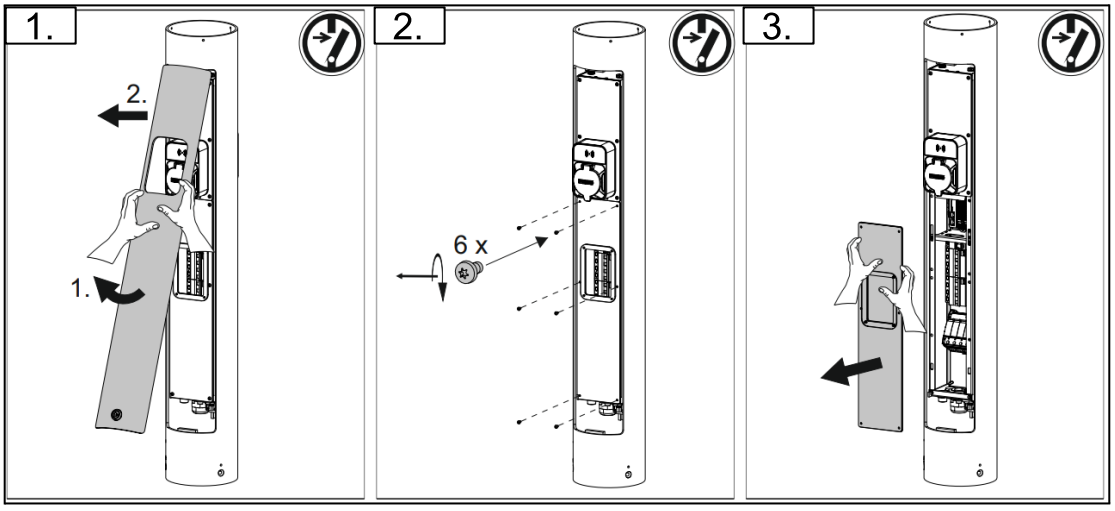

Steps:
1. Ensuring the power supply is switched off
2. Opening the service flap
3. Opening the bottom cover

4.4 Mounting the device

If the temperature is very low, it is strongly recommended that the device is stored at room temperature for 24 hours before installation and commissioning.

When installing the base plate, the desired alignment of the charging points should already be taken into account.

Steps (for mounting on a cast base plate)

1. Mark the fixing holes using the mounting plate and a spirit level

The enclosed fixing material must be used for installation on the ground or foundation. If the surface is different, a suitable fixing method must be selected by the customer.

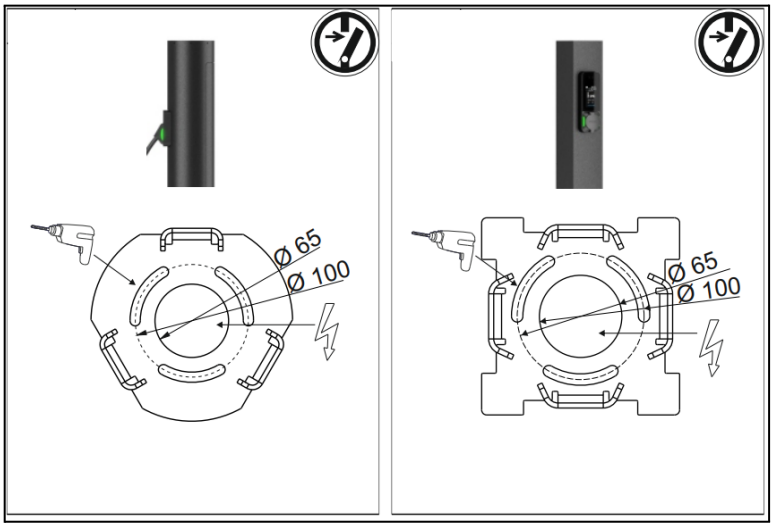

Example illustration:
Drilling template LUPALO and BOCARO bollard solutions - see Quick Guide for equivalent images for the stele solutions

2. Drill the holes in the concrete foundation, taking into account the diameter for the selected fastening material

No holes need to be drilled for installation on the ground or foundation.

3. Laying the cables through cable entries

Approx. 400 mm of cable is required for the supply line from the base plate. To prevent moisture from penetrating the cable gland, it should be tightened firmly.

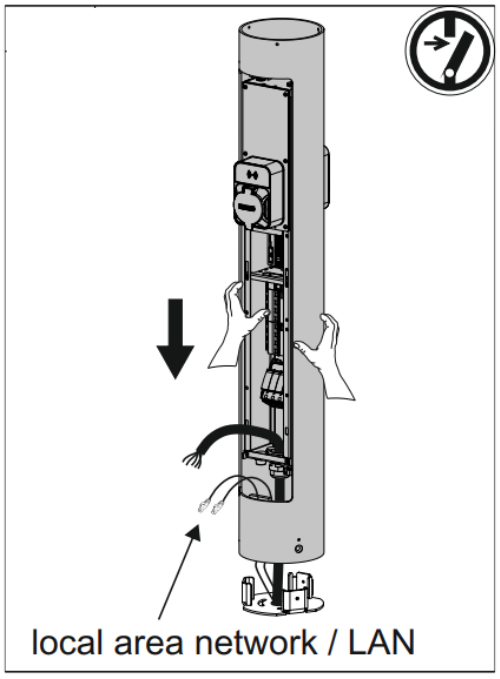

Example illustration:
Cable entries LUPALO bollard solutions

4. Place the charging pole on the base plate, fasten with the screws supplied

When installing the charging pole, make sure that the ventilation holes and the base plate are not buried. These holes are responsible for air circulation and condensation drainage.

5. Final check for firm and secure mounting

4.5 Electrical connection

Connecting the supply line

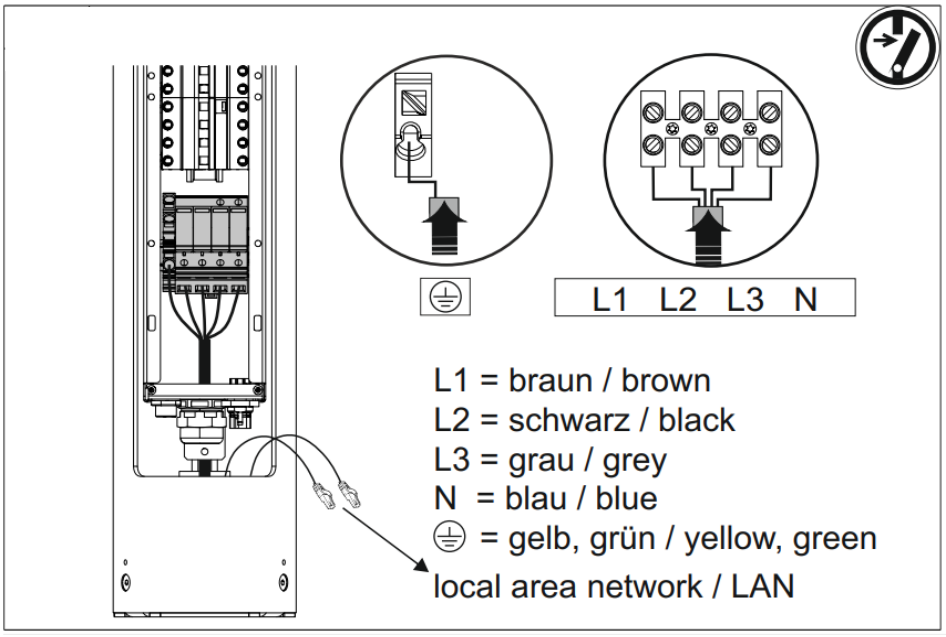

Steps:
1. Shorten supply line from base plate to 400 mm
2. Strip 150 mm of the supply cable
3. Strip 16 mm wire insulation
4. Connection of the wires (supply cable) to the terminal strip according to the circuit diagram

The permissible bending radius must be observed when laying the supply line.

5. Final check: Correct connection of individual wires, firmly connected screws

4.6 Set up three-phase device for single-phase operation

To operate a three-phase device (for devices with 11 or 22 kW charging power) in single-phase mode, no further settings need to be made. Instead, proceed as follows:

- Single-phase connection of the charging station: Use terminals **L1, N** and **PE**

4.7 Limit the charging current

The charging current provided can be set via the dashboard. The default setting is 32 A (Pro and Smart variants), for the Basic variant it is 16 A (2 sockets) and 32 A (one socket). To limit the charging current in the dashboard, please follow the instructions in chapter "Programming - 9.3.2 Setting the charging current".

Setting a charging current of < 6 A is not possible and is interpreted as a limitation to 0 A.

4.8 Close device

Example illustration:
Closing the LUPALO bollard solutions

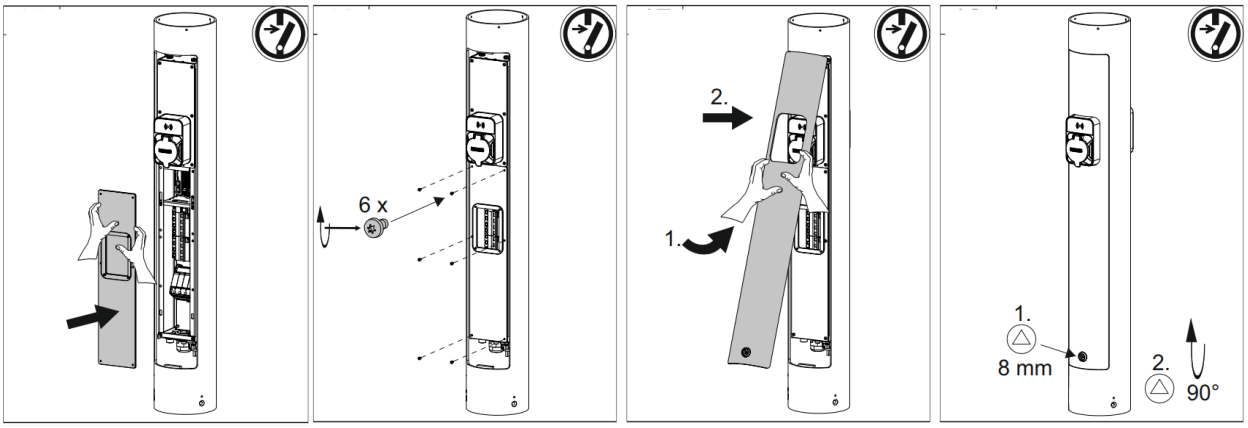

Steps:

1. Attaching the cover and fastening with screws (6)
2. Attaching the service flap, locking the lock

Screw	Torque
Device carrier M4	1.2 Nm
Surge protection connection	3 Nm

5. Commissioning

The activities in this chapter may only be carried out by qualified electricians.

5.1 Switch on the device

⚠ Danger

Risk of electric shock from damaged charging stations
There is a risk of electric shock if a damaged charging station is used. The following points must be observed:

- Do not use the device if it is damaged
- Marking a damaged device to prevent it from being used by other persons
- Immediate rectification of the damage by a qualified electrician
- If necessary, decommission the charging station by a qualified electrician

Requirement:

- Correctly installed device
- Device in proper condition

Steps:

1. Switching on the FI and LS switch
2. Switching on and checking the power supply

✓ LED "available" on the status LED

5.2 Test of the device

When the charging station is commissioned for the first time, it must be tested in accordance with IEC 60364-6 and the relevant applicable national regulations.

6. Operation

6.1 Charge vehicle

⚠ Warning

Risk of injury due to unauthorized aids
The use of adapter plugs, extensions and additional charging cables in conjunction with the charging station leads to the risk of electric shock or cable fire. The following applies:

- Use of charging cables intended exclusively for the vehicle and the charging station charging cables
- No use of adapter plugs, extensions or additional charging cables for charging.

Depending on the expansion stage, the charging station can be used with or without prior authorization.

The factory setting of the charging stations is set to permanent charging release. Each charging station has a built-in RFID reader. To set the authorization options, please refer to the information in chapter "6.2 Authorization".

6.2 Authorization

You can adjust the authorization in the dashboard. You will find all the steps required for this in chapter 9.8 Load release solution.

Charging without authorization

At charging stations without authorization, you can start the charging process without approval. The charging process starts automatically after connecting the charging cable to the vehicle.

Charging with authorization

For devices with authorization, prior authorization via the RFID reader, the display or the backend app is required.

6.2.1 Start the charging process

Steps:

1. Complete unwinding of the charging cable
2. Connecting the charging cable to the vehicle to be charged
3. Connecting the charging cable to the charging station (optional)
4. Authorization for loading release (optional)

The following steps are carried out automatically:

- Recognize the current carrying capacity of the charging cable, reject unsuitable cables
- Checking the requirements for a proper charging process
- Communication with the vehicle via the CP contact (Control Pilot)

✓ The charging plug locks automatically and the charging process begins.

6.2.2 End charging process

⚠ Attention

Damage to the charging cable

Tension on the charging cable can cause cable breakage and other damage. The following applies:

- Disconnecting the charging cable from the vehicle's charging socket only directly at the plug permitted.

<u>Permanently connected charging cable:</u>

- Exclusively controlled termination of the charging process
- Closing the protective flap after charging is complete
- Kink-free hanging or stowing of the charging cable

Integrated socket:

- Exclusively controlled termination of the charging process
- Only unplug the charging cable at a right angle to the socket outlet, risk of damage due to lateral pressure

Charging cable cannot be disconnected

After a power failure, for example, it is possible that the charging plug cannot be disconnected so that the charging plug in the device cannot be unlocked. The charging plug must then be unlocked via the dashboard.

- It is necessary to open the device carrier, therefore use a qualified electrician for emergency unlocking commission

6.3 Check residual current circuit breaker

Open the service flap of the charging station as described in chapter "4.4 Opening the device". The inspection window in the cover can be used to check whether the residual current circuit breakers have been tripped.

6.3.1 Reconnect residual current circuit-breaker and miniature circuit-breaker

The inspection window must be removed from the charging station so that the FI/LS can be switched on again. The inspection window and the service flap must then be firmly closed again. The charging station is now ready for use again.

6.4 Control elements

6.4.1 RFID

Each charging point has a built-in RFID reader, which is installed above the socket behind a glass pane. To activate a charging station with an RFID tag, the chip is held against the pane.

The tag of the RFID chip must have the following specifications in order to be recognized:
Frequencies: 125 kHz
134,2 kHz
13,56 MHz - MIFARE®

6.4.2 Socket

For the variants of the charging stations with built-in socket (type 2), any charging cable approved for the respective vehicle can be used to charge the vehicle. Before each charging process, the plug must be checked for dirt and damage. Dirt must be removed before plugging in; if there is any damage, the plug must not be plugged in / the charging cable must not be used.

To plug the charging cable into the socket of the charging station, open the cover of the charging station upwards. Insert the plug horizontally into the socket without applying any lateral pressure. Once the plug has been placed in its final position, the cover can be lowered.

6.4.3 Charging cable

Any vehicle with a type 2 socket can be connected to the charging station variants with a permanently connected charging cable. Before each charging process, the plug and cable must be checked for dirt and damage before the charging cable is used.

To plug the charging cable into the socket of your vehicle, the protective cap must first be removed. The protective cap is an integral part of the plug and serves to protect the plug from dirt, moisture and damage. It must not be removed.

7. Maintenance and repair

7.1 Maintenance

⚠ Danger

Risk of electric shock from damaged charging stations

There is a risk of electric shock if a damaged charging station is used. The following applies:

- Do not use the device if it is damaged,
- Marking a damaged device to prevent it from being used by other persons other persons,
- Immediate repair of the damage by a qualified electrician,
- If necessary, have the charging station decommissioned by a qualified electrician.

Regular inspection and maintenance work supports trouble-free and safe operation of the device and contributes to the long service life of the charging station. Sources of faults can be detected at an early stage if the device is checked regularly, thereby avoiding hazards.

If damage to the appliance is detected, it must be repaired immediately by a qualified electrician. Do not continue to use a damaged appliance, as this may increase the risk of electric shock or damage to property.

- Daily inspection of the device for operational readiness and external damage; also Check before each charging process

Examples of damage:

- Defective housing / display (e.g. deformations, cracks, fractures)
- Defective or missing components (e.g. protective components, protective cover of the socket)
- Missing or illegible signs

A maintenance contract with a responsible service partner can ensure regular inspections.

Recommended maintenance intervals

The following activities may only be carried out by a qualified electrician.

Inspection intervals for charging infrastructure for electric vehicles based on DGUV Regulation 3

Component	Maintenance work to be carried out	Responsible person
daily / with every load		
Charging station	Visual inspection for defects or damage	User / Operator
	Checking readiness for operation	Operator
Semi-annual		
Residual current device	Functional test	Operator / qualified electrician

Charging cable	Repetition of measurements and tests according to VDE 0701/702	Qualified electrician
Annual		
Charging station	Repetition of measurements and tests according to VDE 0105-100	Qualified electrician

- Proper removal of damage to the device
- Detailed documentation of maintenance
- If necessary, request a maintenance log from RZB Energy Support

7.2 Cleaning

⚠ Danger

Danger to life due to electric shock

The charging station contains electrical components that are under high voltage. Improper handling of the open housing, particularly in conjunction with moisture, can result in serious injury from electric shock.

- Cleaning the charging station from the outside only
- The charging station and protective devices must be kept closed

⚠ Attention

Material damage due to incorrect cleaning

Incorrect cleaning can result in material damage to the housing or components.

- Avoid contact with running water,
- Avoid water on parts with electrical voltage
- No use of high-pressure cleaning equipment
- Only use tools (e.g. brooms, cleaning agents) that are suitable for powder-coated surfaces
- No use of aggressive cleaning agents or chemicals

Depending on the operating conditions and degree of soiling, the charging station can be cleaned dry or damp, whereby cleaning is only carried out from the outside.

Steps:

1. Removing dust and dirt with a hand brush (soft bristles)
2. Wipe the charging station with a clean cleaning cloth (moisten with water if necessary)
3. Only clean the charging cable when it is not plugged in

8. Fault rectification

If a fault occurs, the red status LED on the socket lights up or flashes. The charging station cannot be used until the fault has been rectified.

Red LED lights up

As a rule, the fault can only be rectified by a qualified electrician. The fault can be read out in detail in the dashboard.

Possible faults:

- Incorrect or defective charging cable
- Charging plug could not lock
- Charging cable or vehicle have a fault
- Charging cable or vehicle were rejected
- Residual current circuit breakers or circuit breakers have tripped
- RFID was not accepted

If the fault cannot be rectified, the responsible service partner must be contacted.

8.1 Spare parts

If new components (replacements or accessories) are required to rectify the fault, these must be checked in advance to ensure that they are identical.

- Only original spare parts and accessories manufactured and/or approved by RZB are to be used.

8.2 Emergency release of the charging plug

Unlock via the dashboard

Each charging point can be unlocked via the dashboard if it does not unlock automatically after charging. To do this, select the sub-item "Force unlocking" in the action menu (three dots) of the respective charge point.

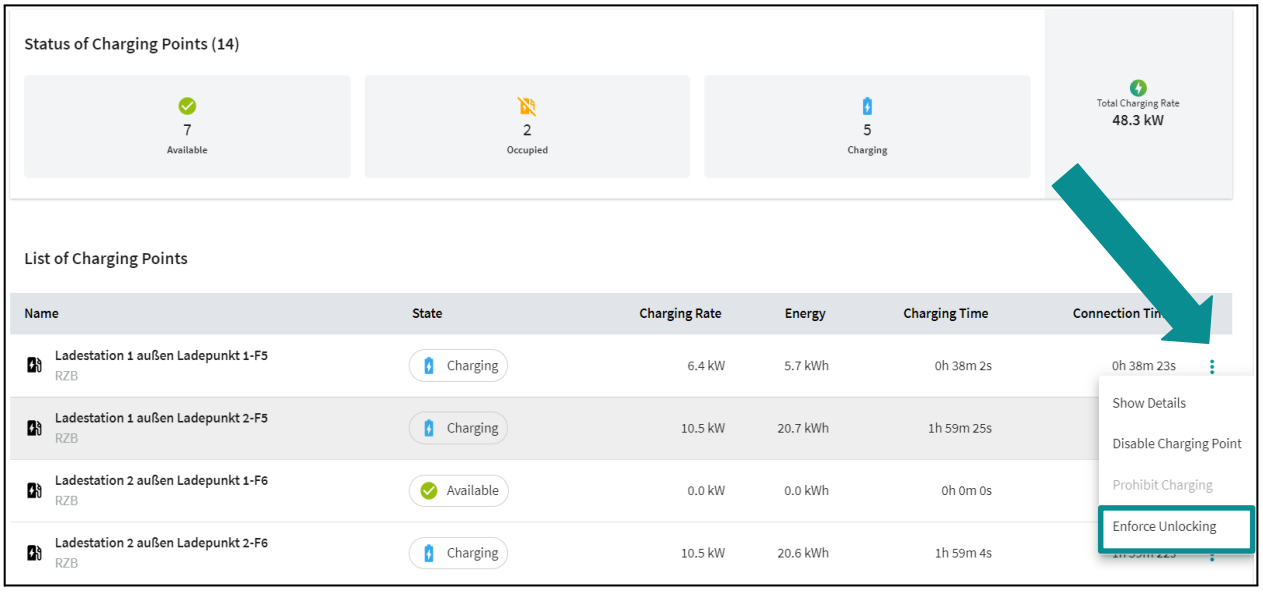

9. Programming

The most important steps and contents for programming the controller are summarized in these commissioning instructions. For further information and support, please refer to the latest version of the Phoenix Contact manual, which can be downloaded from the website https://www.phoenixcontact.com/en-pc/.

Screenshots from the Phoenix Contact Dashboard are included below to illustrate certain content. It should be noted that due to enhancements and optimizations of the software and the dashboard itself, deviations between the illustrations shown here and the current dashboard version may occur.

9.1 Access to charge controller

The charge controller can be accessed in various ways.

a) Access via the USB-C interface
This is the preferred way to avoid restrictions in Ethernet networks.

Steps:

1. Download the RNDIS driver at: „catalog.update.microsoft.com“
2. Search for: „USB\VID_0525&PID_A4A2“ or „RNDIS Gadget“
3. Select a suitable driver for your operating system, e.g. driver from Acer for „Win7/8.1/later“
4. Download the driver (size approx. 21 kB)
5. Unpack the ZIP file into a directory, e.g. c:\rndis-driver.
6. Open the Device Manager on your computer by entering "Device Manager" in the search bar

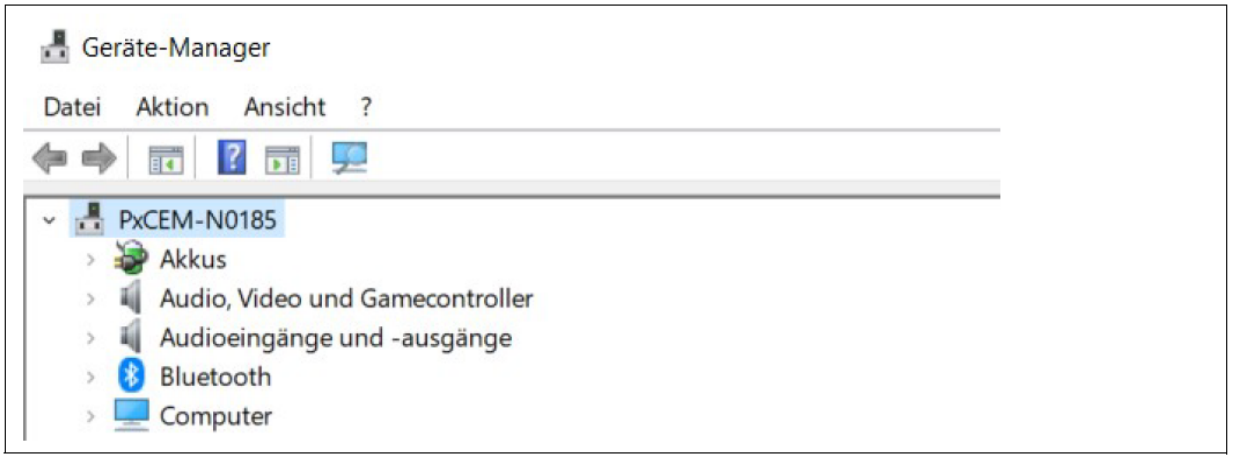

7. Connecting the CHARX SEC-3xxx to the computer

If the charging control unit is already connected, the connection must be briefly disconnected. A device appears or disappears when connecting and disconnecting. This is the interface to the charge controller. Depending on the operating system, the name is "USB device" or similar.

8. In the Device Manager of the newly found device -> "Update driver" menu -> "Manual search "Manual search" -> Select target directory

The driver is found in the target directory. The device is displayed under "Network, USB Ethernet/RNDIS Gadget".

9. Access the Web-Based Management Dashboard by entering the following IP address in the browser: 192.168.5.1.

If access is not possible despite the driver being installed, the following errors may be present may be present:

- The computer attempts to establish the connection via an Ethernet or WLAN interface. In this case, switch off the interfaces for a short time.
- The driver has been assigned to an incorrect interface. Check which interface appears or disappears by plugging and unplugging the module.

b) Access via an Ethernet network with router

Steps:

1. Connection of the charging controller to the router via ETH0 interface
2. Connecting the computer to the router via the ETH0 interface

The ETH0 interface is set at the factory to dynamic address assignment by a DHCP server. Once the address has been assigned by the router, the interface can be found in the network.

3. Access to charging control (system-dependent accessible at http://ev3000.local or http://ev3000)

If several charge controllers are integrated into a network via DHCP, consecutive numbers are added to the names of the charge controllers (ev3000-2, ev3000-3, ...). The charge controllers can be accessed under these names accordingly.

- **Procedure with restricted access rights**

If you are operating in a network with restricted access rights, the address assignment is often blocked or the charging controller cannot be found by your computer. In this case, the IP address must be searched for in the network or another type of access must be selected.

- **Local search of the charge controller**

Searching via a search engine should be avoided, instead it is recommended to establish a direct connection.

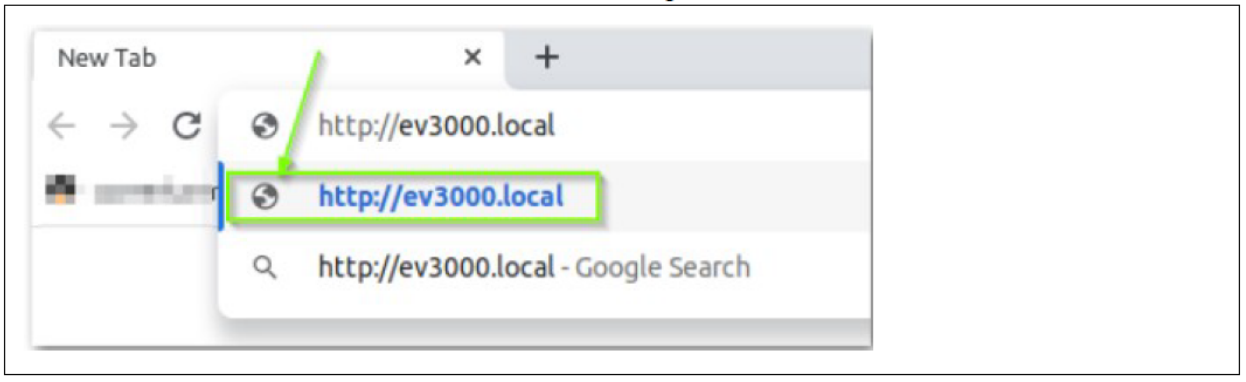

c) Access via a network

If an IP address has already been assigned via the DHCP server, the charge controller can be addressed directly. To do this, simply enter "http://IP/" in the search bar of the browser.

9.2 WBM dashboard and login

Static and dynamic control data can be read out and configurations made via the web-based management (WBM).

Waiting time until WBM is started

To ensure rapid availability in operational mode after a restart of the charge controller, the WBM is started as one of the last processes. This can lead to a delay until the WBM is available with its full range of functions. If necessary, the website should be reloaded in the browser using the "F5" key to update the status of the WBM.

Once you have successfully logged in, you can access other areas of the WBM.

Login

- Language selector
- Login
- User roles
- Password settings

Dashboard

- Summary of the connected charging controllers Charging park
- Status displays and configuration of the individual charging controls
- Status displays and configuration for operation on an OCPP backend
- Status displays and displays for load management
- Display and maintenance of the local release list

System control

- General system status and version information
- Display and setting of the time
- Network settings and connection status
- Modem settings and connection status
- Download log files for diagnostic purposes
- Module switching to client-server operation
- Software updates

9.2.1 Dashboard

After opening the WBM via the browser, the dashboard shows an overview of all charging points that are connected and set up via this charging controller. This includes additional expansion modules on the backplane bus. If the charging controllers work in a client-server network, additional clients are shown with their respective expansion modules.

The overview contains a summary of the connected charge controllers:

- Number of available charging points for new charging processes,
- Number of occupied charging controls without active charging process,
- Number of charging controls on which charging is currently taking place,
- Total power currently being charged on all connected charge controllers.

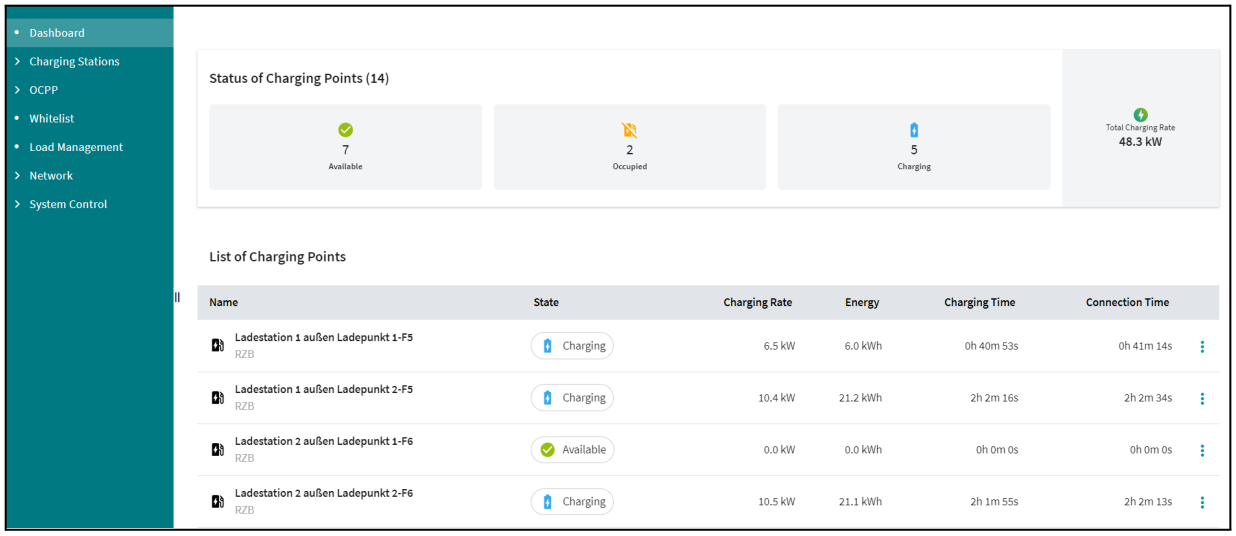

The following information is displayed for the individual charge controls:

- name and location of the charge controller (to be specified in the configuration),
- Current status,
- current power (when charging is active),
- amount of energy currently charged,
- charging time,
- connection time.

Only configured charging points are visible in the dashboard
Only charging points that are configured are shown in the dashboard view.

9.2.2 Switch language

The language setting can be used to switch between the following languages:

- german
- english

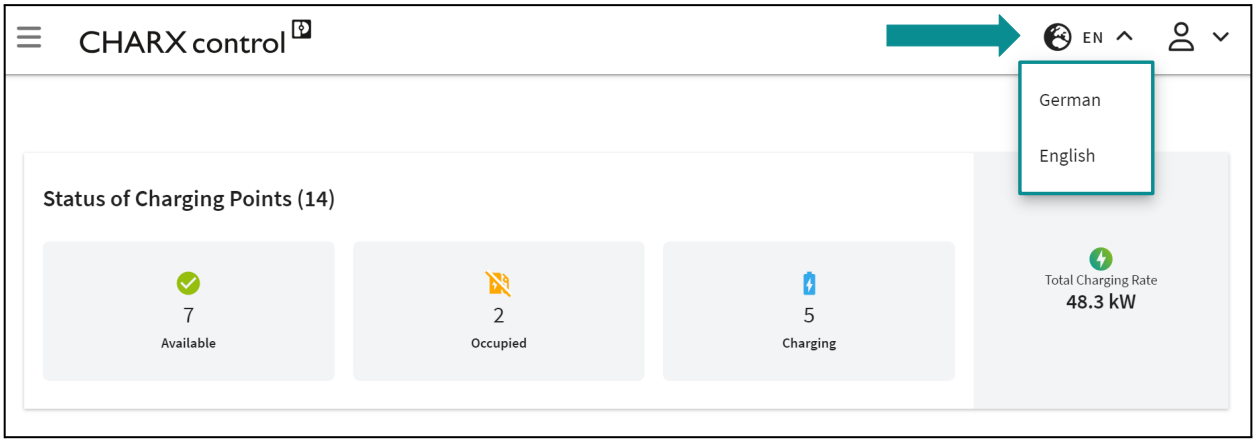

9.2.3 Login

When the WBM is opened, the "Guest" user role logs in to the charge controller without any further rights. For further activities, you must log in with the corresponding user roles. This is possible via the figure button in the top right-hand area of the screen.

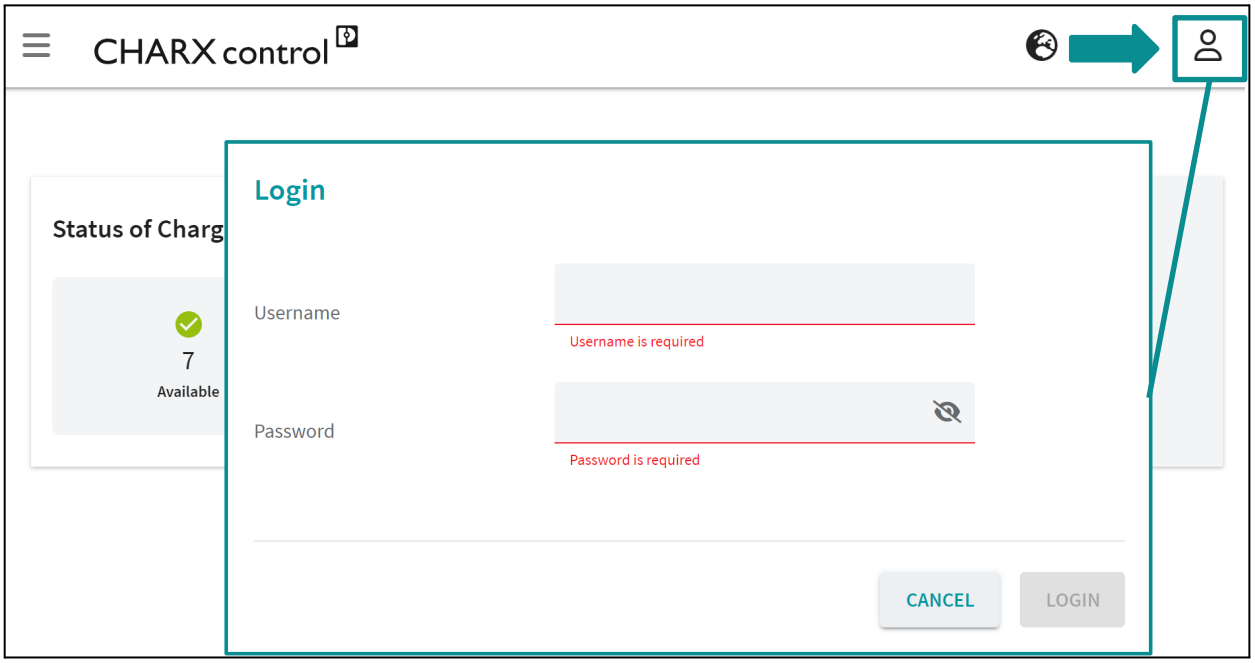

9.2.4 User roles

The WBM provides various user roles with corresponding login and different rights.

Role	Login	Default Password	Rights
Guest	“--”	“--”	Read only right on the dashboard
User	“user”	“user”	All read permissions, loading permissions, editing of release lists, download of log files
Operator	“operator”	“operator”	User rights, additional settings required for operation and local commissioning (network, backend, load management), software updates

ATTENTION: The passwords are always the same on delivery and must be customized by the customer.

9.2.5 Changing the password

It is strongly recommended that you change your password regularly.

To prevent misuse and unauthorized device settings, it is recommended to change the password at the latest when commissioning the charging station at the installation site. To do this, assign a new password for the user role using the "Profile" button. Log out when not in use.

To prevent misuse and unauthorized device settings under your user profile, it is recommended that you log out using the "Logout" button if you are temporarily not using the WBM.

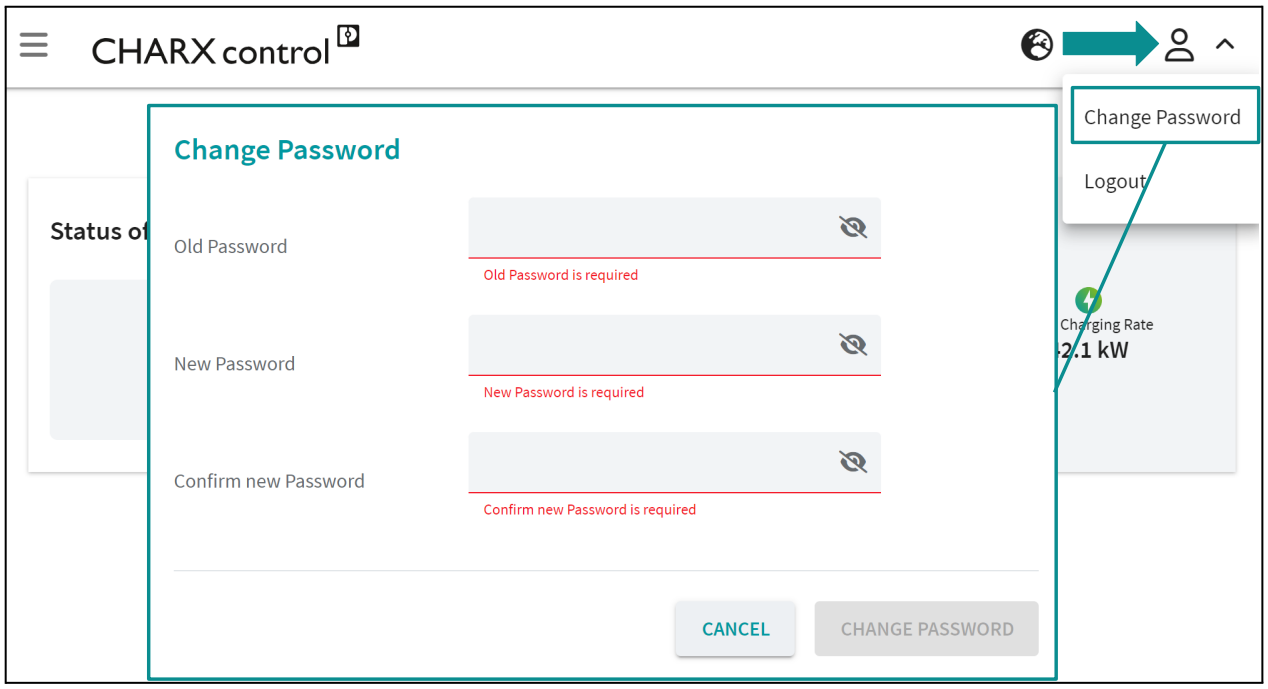

9.3 Configuration of the charging park: Charging stations

Selecting the "Charging stations" -> "Overview" buttons takes you to the overview of all charging stations and charging points. A displayed charging station can contain up to twelve charging points.

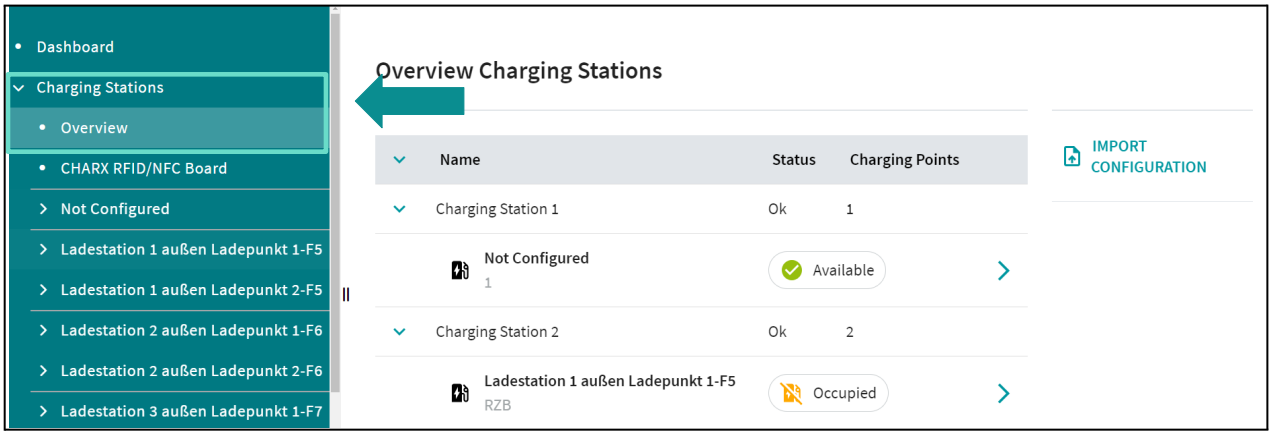

To enable the charging stations to communicate with each other, they must be looped through with a LAN cable. This connection of the charging stations is also important for load management.

9.3.1 Charging park / Charging point details / Status

The "Charging point details" view is opened by clicking on the arrow next to the charging point in the charging station view.

The "Charging point details" view contains the "Status" page, which shows information (1) and operating options (2) for the charging point. Only the "Manufacturer" user has full authorization to operate the charging points.

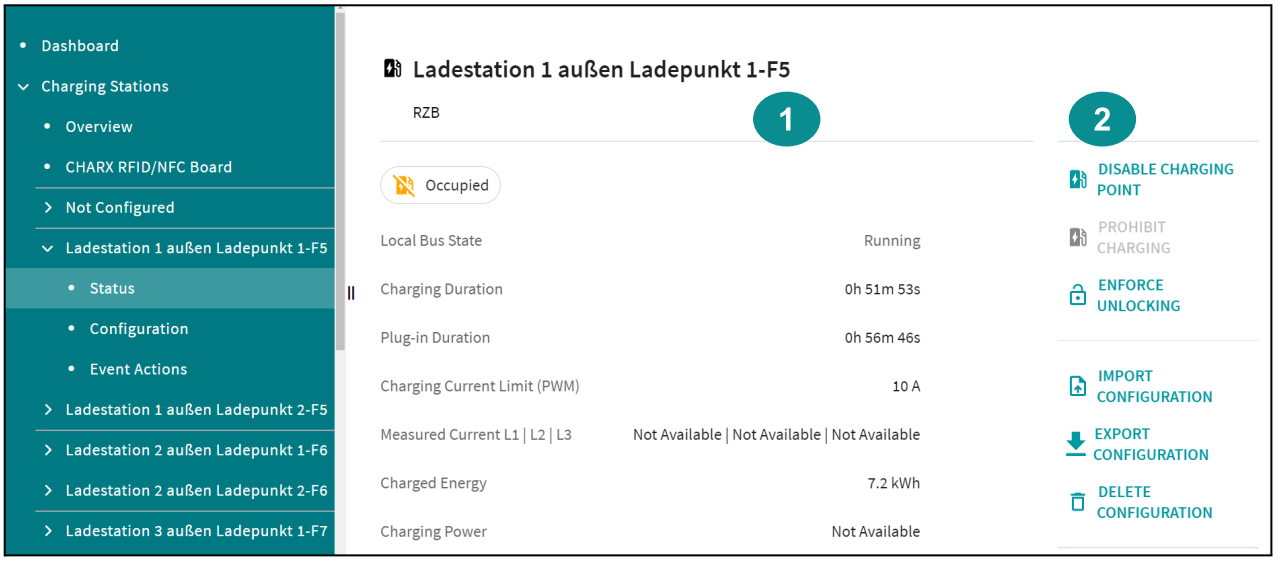

The information is divided into the following groups:

- current charging state
- device information
- basic module
- bus communication
- energy meter device
- charge point details
- ISO 15118 related status data

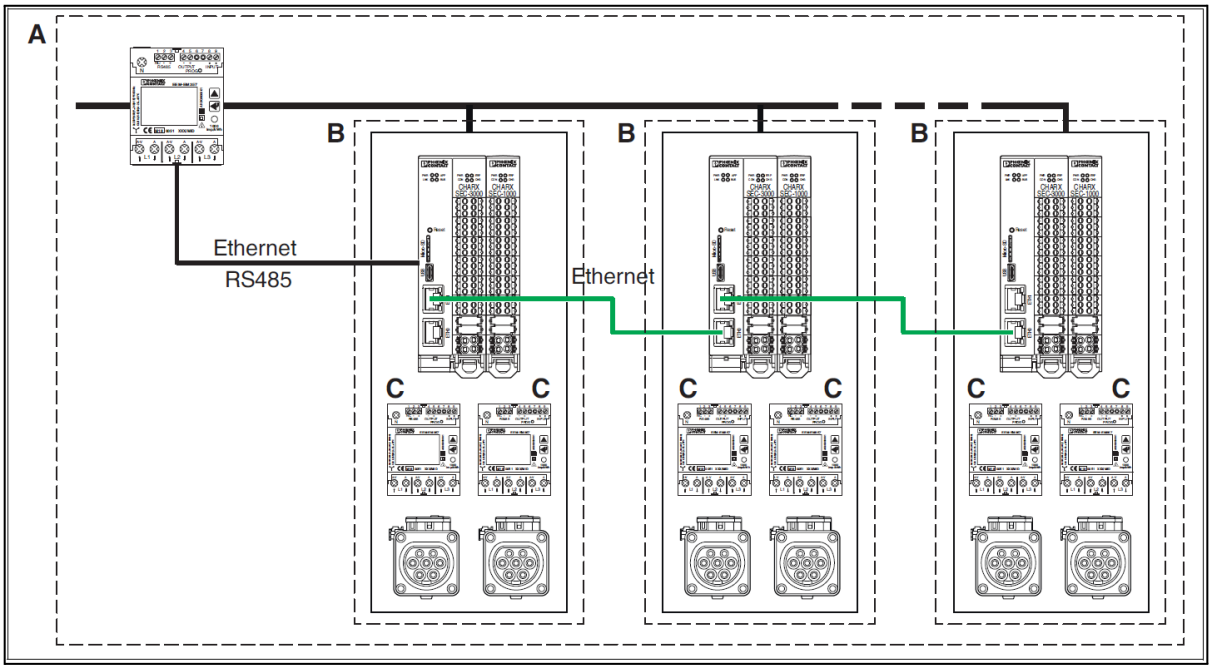

Charging park I Charging station I Charging point details I Status	
CHARX charge point X	
Status	The same display as on the dashboard. The current status of the charging point is displayed here. - available

	- busy - charging - booked - error (Further information on error codes -> see Phoenix manual)
Local bus status	The status of the connection via bus communication
Charging duration	The total time that the connected vehicle was in "Charging" or "C" status. This time is normally shorter than the connection time.
Connection duration	The connection duration is the sum of the times in which the charging point is in the "Occupied", "Charging" or "Error" state and is reset to the value "0" when the vehicle is disconnected.
Charging current limitation (PWM)	The charging current specification that the charge controller is currently communicating to the connected vehicle. If a vehicle is not connected, the specification is always 0 A.
Actual current L1 I L2 I L3	The currents currently measured at the charging point are displayed. If no measuring device is connected, the currents are displayed as not available.
Energy charged	The charged energy during the current charging process is displayed. If no meter is connected, "not available" is displayed here. If no meter is configured, this data is not visible.
Charging power	The current charging power is displayed. If no meter is connected, it is displayed as not available. If no meter is configured, this data is not visible.
Device information	
Controller name	Designation of the charge control ex works
Controller UID	The controller UID only exists once in the entire charging park. It can be used to uniquely identify a charging controller. The UID that can be read here can also be used for communication from a higher-level system (e.g. MQTT).
Basic module	
Hardware version	Version of the charging station hardware
Firmware version	Version of the charging station firmware. This can be updated via the "System control / Software" menu. (Further information -> Phoenix manual p. 112)
Bus communication	
Position in the backplane bus	The position in the backplane bus helps to determine which charging controller is currently being viewed. "1" is the server or client module, "2" to "12" are extension modules.
Header module IP address	The IP address via which the server or client module of the charge point can be reached.
Header module MAC adress	MAC address of the server or client module..

Charging park I Charging station I Charging point details I Status	
Energy meter device The information on the energy meter is only displayed if an energy meter is connected. Otherwise, the fields are filled with "Not available".	
Current L1	Current at phase L1 of the energy meter
Current L2	Current at phase L2 of the energy meter
Current L3	Current at phase L3 of the energy meter
Voltage U1	Current voltage at U1 of the energy meter
Voltage U2	Current voltage at U2 of the energy meter
Voltage U3	Current voltage at U3 of the energy meter
Counter reading	Total counter reading of the energy meter
Performance factor	Performance factor of the energy meter
Frequency	Mains frequency present at the energy meter
Charge point details	
Status	Status of the charging point according to IEC 61851-1
Last read RFID	If an RFID card has been read by the RFID reader configured in the charging point, the RFID tag is displayed here.
External temperature	If a temperature evaluation is configured, the temperature read out is displayed here.
ISO 15118 If communication via ISO 15118 is configured in the charge point configuration, the ISO 15118 section is displayed below the charge point details. If ISO 15118 is not configured, no further information is displayed here.	
Start time (UTC)	The time that the vehicle communicates as the desired time to start charging. This is the time at which the charging process starts.
Departure time (UTC)	The time that the connected vehicle communicates as the planned departure time.
Charging process (15118)	The current loading progress is displayed. - Start: The process is running. - Stop: Charging is stopped. - Renegotiate: The vehicle is renegotiating with the charging point.
Session ID	The session ID describes the process with a unique number.
EVCC ID	The EVCC ID that was communicated to the vehicle.
Energy transfer mode	The energy transfer mode requested by the vehicle can be either “AC_single_phase_core” or “AC_three_phase_core” and determines how many phases the vehicle charges.

TCP connection status	Status of TCP connection: UNKNOWN, DISCONNECTED, CONNECTED	
QCA link status	Status of QCA link: UNKNOWN, NOT_AVAILABLE, DOWN, UP	
Error	SLAC_FAILED	The SLAC process has failed. One reason may be that time specifications have not been met or messages are damaged.
	PROTOCOL_HANDSHAKE_FAILED	The EVSE and the EVCC could not agree on the same ISO 15118 communication protocol version. The latest EVSE implementation only supports urn:iso:15118:2:2013:MsgDef version 2.0".
	SSL_HANDSHAKE_FAILED	The SSL/TLS handshake for the TCP connection, which is used for the actual high-level communication has failed for some reason. Reasons for this may be that no valid V2G root certificate is installed on the EVSE side or the EVCC does not accept the certificate.
	SEQUENCE_ERROR	The EVCC sends a request that is not expected in the current state. The EVCC interrupts the message flow sequence specified by the communication protocol ISO 15118 communication protocol.
	SESSION_SETUP_TIMEOUT	After the SLAC procedure is completed and the data connection is established, the EVSE and the EVCC must establish a charging session within the specified eighteen seconds, otherwise the high-level communication is aborted by the EVSE.
	SEQUENCE_TIMEOUT	The EVCC does not send request(s) within the time specified by the ISO 15118 protocol. The high-level communication is aborted by the EVSE.
	UNKNOWN_SESSION	The EVCC has sent a session ID to resume a previously paused charging session that is not known on the EVSE side. The high-level communication is aborted by the EVSE.
	TARIFF_SELECTION_INVALID	A received charge request from the EVCC contains an SA tuple ID that was not previously sent by the

		EVSE in the "charge parameter discovery response". The high-level communication is aborted by the EVSE aborted.
	CHARGING_PROFILE_INVALID	The charging profile sent by the EVCC violates a power limit specified in the "charge parameter discovery response". The high-level communication is aborted by the EVSE.
Operation		
Deactivate or activate charging point	If the charging point is active, it can be deactivated using the button. The charging point is set to status F (in accordance with IEC 61851-1) and displayed with the status "Error". An existing charging process is canceled. Activation takes place via the same button.	
Issue or revocation of the loading permit	If a vehicle is connected to the charging point, a charging authorization can be issued by the website operator. The loading release can be revoked using the same button.	
Force unlocking or cancel unlocking	If the release cannot be released on the vehicle, it can also be released via the website. An existing charging process is canceled. The "Force unlocking" status must remain until the plug has been removed from the charging socket. The forced unlocking can then be canceled.	
Only available for the "Manufacturer" user role		
Import configuration	A previously saved configuration can be loaded into the charge controller using the "Import configuration" button. The current configuration is overwritten at the selected charging point and cannot be restored. The available charge controls are shown in the order of position on the backplane bus.	
Export configuration	The configuration is exported as a JSON file and normally saved in the "Downloads" folder.	
Delete configuration	A configuration can only be deleted if the charge point is configured. After pressing the button, the charging point is restored to its factory settings. Deleting the configuration cannot be undone. A configuration can be exported beforehand for security reasons.	

9.3.2 Setting the charging current

The charging stations are delivered from the factory with a maximum charging current of 32 A. If this is to be changed, this can be done in the configuration of the respective charging point.

To do this, the charging station to be changed is selected in the "Charging park" area and the "Configuration" area is accessed. In this user level, the desired charging power can be set under "Energy".

9.4 Set up an Internet connection

The settings for the Ethernet interface ETH0 are made via the "Network" -> "Ethernet" area. The corresponding status data is displayed. A login as "Operator" is required for this.

<u>No configuration option on the ETH1 interface</u>

The ETH1 interface is intended for the connection of additional charge controllers in a daisy chain network. Configuration is carried out automatically by interconnecting charge controllers or setting the "Client" operating mode. Further configurations are not necessary or intended.

If the router works with permanently assigned IP addresses, the "Automatic IP assignment (DHCP)" checkbox must be unchecked. The IP address, subnet mask and gateway must then be entered.

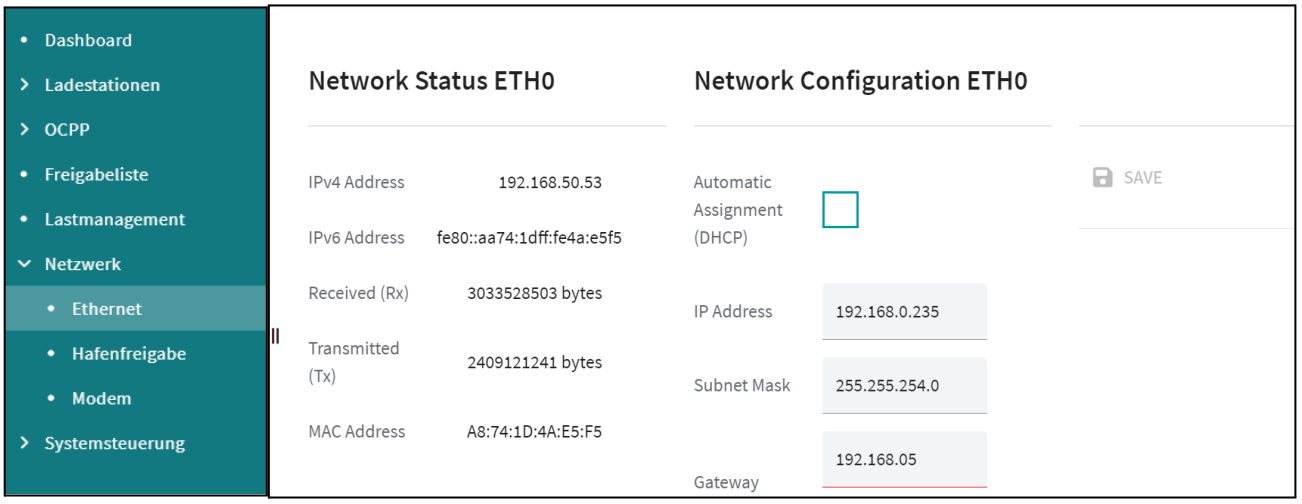

When working with an open network, the automatic IP assignment can be retained as a setting. In this case, the charging station automatically connects to the router and an IP address is assigned.

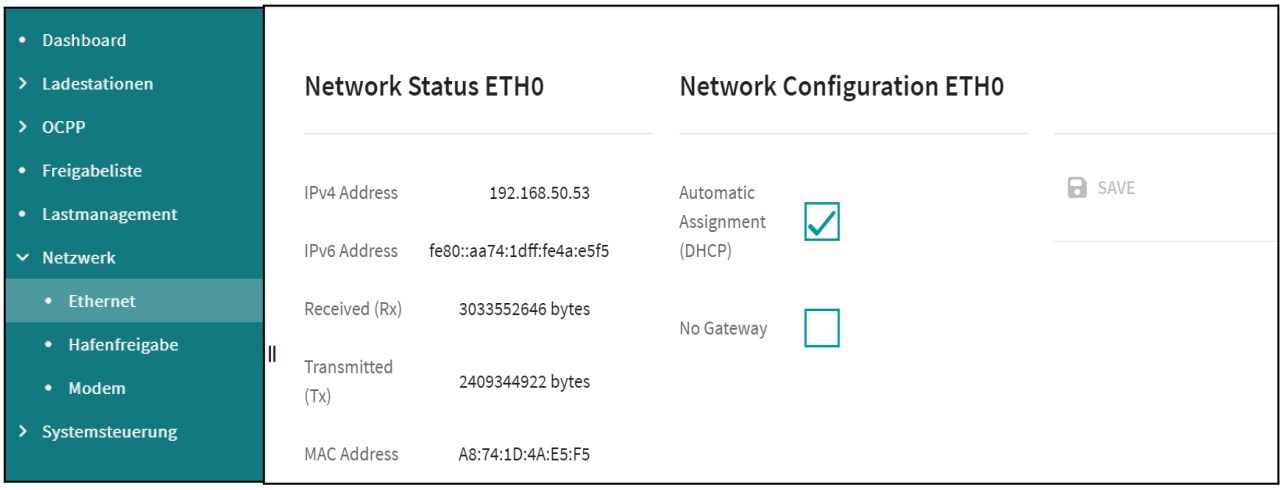

Control Panel / Network	
Network settings	
IPv4 address	Display field of the current IPv4 network address of the charge controller (specified by DHCP or set manually)
Broadcast address	Display field for the broadcast address under which all subscribers in the network can be reached (assigned by DHCP server).
IPv6 address	Display field of the current IPv6 network address of the charge controller (specified by DHCP)
Receive (Rx)	Data volume received since the start of charge control
Transfer (Tx)	Volume of data sent since the start of charge control
MAC address	MAC address of the charging controller assigned at the factory
Automatic IP assignment (DHCP)	Button for activating automatic IP address assignment by external DHCP server
No Gateway	Field is visible after DHCP has been selected. If the selection field is activated, no gateway is entered. Software applications on the charge controller cannot access the Internet via ETH0. If the checkbox is not activated, the gateway specified by the DHCP server is used.
IP address	Input field for defining the IPv4 address of the charge controller if DHCP address assignment is not activated
Subnet mask	Input field for the subnet mask of the charge controller. This subnet mask is used if no DHCP service is active. (Default: 255.255.255.0)
Gateway	Input field for the IP address of the default gateway. This IP address is used if no DHCP service is active.
Save	Button for transferring the network settings

9.5 Integrate and activate SIM card

The charging station must be opened as described in "4.4 Opening the device".
The SIM card can then be inserted into the charging controller as shown below.

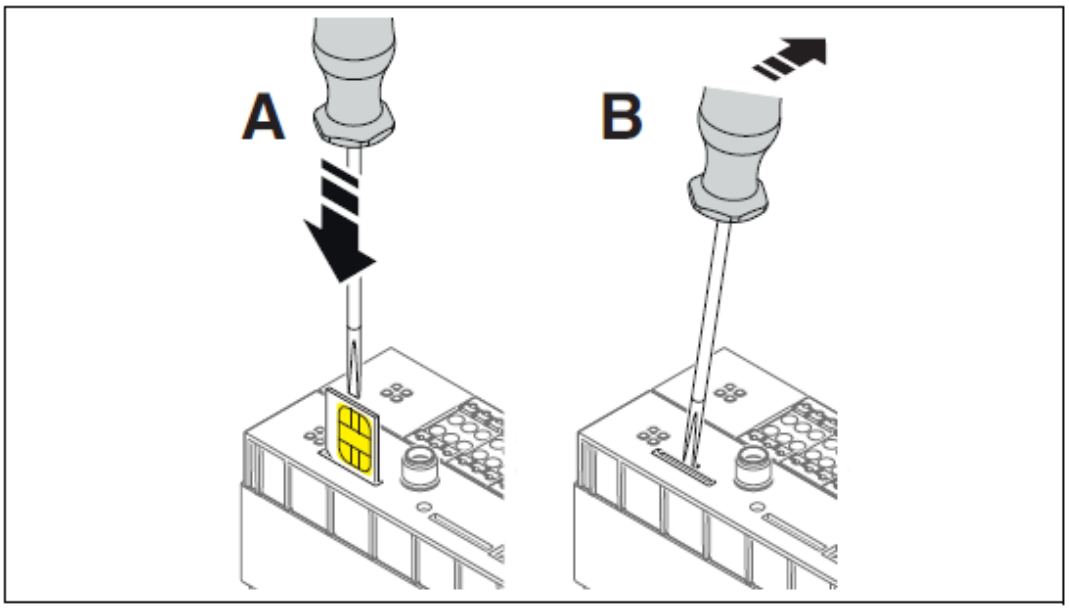

ATTENTION: Electrostatic discharge
Electrostatic discharge can damage or destroy components. When handling these, the necessary safety measures against electrostatic discharge (ESD) in accordance with EN/IEC 61340-5-1 must be observed.

ATTENTION: Operation of micro SIM cards (3FF) only
The device only supports SIM cards in micro SIM format (3FF). Nano SIM adapters should not be used and the provider should be contacted if necessary.

ATTENTION: Note the orientation of the SIM card
The contact surfaces of the SIM card point to the left when the charging control unit is mounted vertically. The angled edge of the SIM card points towards the top edge of the device. It is essential to ensure that the SIM card is oriented correctly.

The necessary settings for using the SIM card (PIN, APN access data) must be made in the dashboard in the "Network" -> "Modem" area. To make the settings, a login as "Operator" is required.

Check "Service active" to switch the mode to SIM, then enter the SIM pin. The APN and the access data (user name and password) differ depending on the provider. The required data can be found on the Internet or requested from the relevant provider.

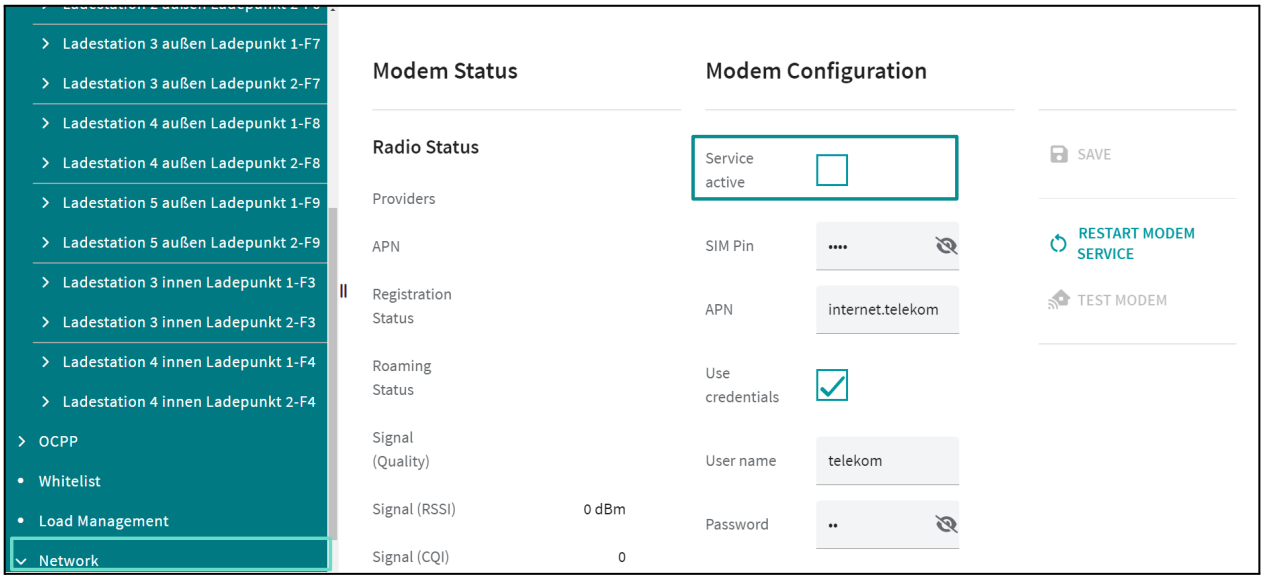

9.6 OCPP settings

To establish a connection with a backend, the relevant OCPP settings must be made. In the "OCPP" area, the current status of the OCPP configuration can be viewed, the communication parameters to the backend can be configured and settings for operation can be made.

Steps:
Step 1: Activate load release via OCPP:

- In the "Charging station" area -> "Configuration" area
- under "Load release" -> "About OCPP"
- Selecting the RFID of the charging station
- OCPP ID numerically ascending

This setting is important so that the charging station can be linked correctly.

Example: Charging park with 3 charging stations (1 charging station with 2 charging points)

<u>Charging station 1</u>
1 Socket: OCPP ID 1
2 Socket: OCPP ID 2

<u>Charging station 2</u>
1 Socket: OCPP ID 3
2 Socket: OCPP ID 4

<u>Charging station 3</u>
1 Socket: OCPP ID 4
2 Socket: OCPP ID 5

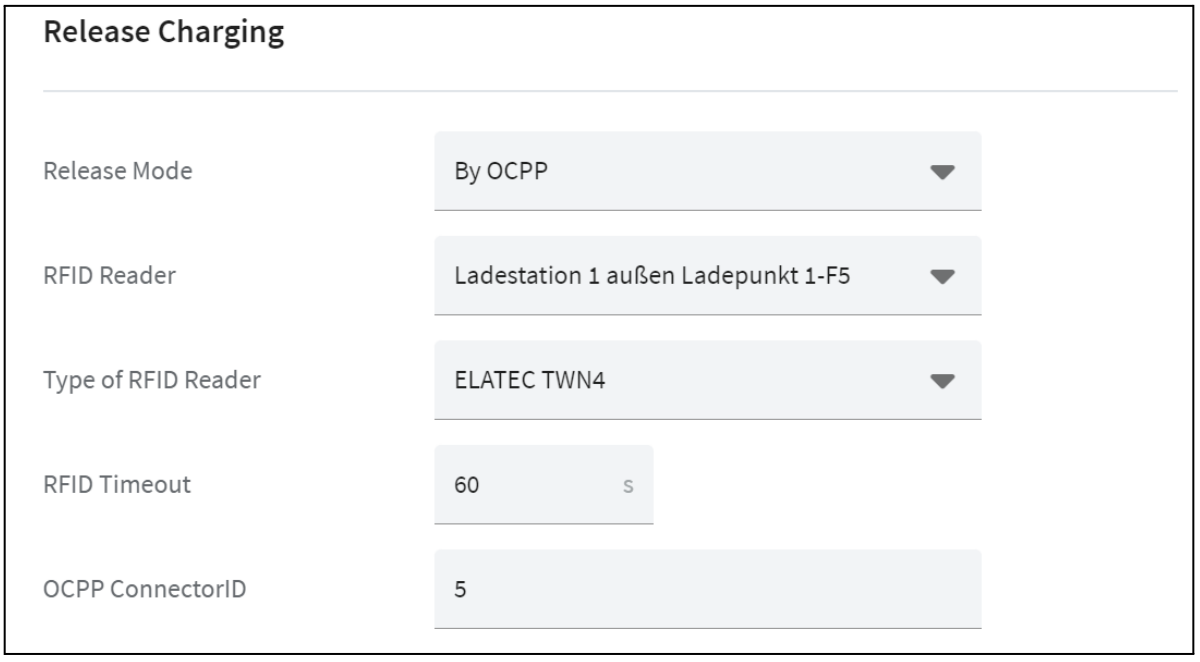

Step 2: In the "OCPP" area

- Access to the configuration level
- Selection of the network interface depending on the operating mode
- Enter the backend URL of the desired backend (provided by the respective backend provider)

The serial number of the charging station is the serial number that is used to identify the charging station. The serial number of the charging station can be found in the OCPP configuration at the bottom of the page, e.g.: wss://occp.xxxx.app/123123123

- Restart the OCPP server by clicking on the corresponding button
- In the "OCPP" -> "Status" area: the current status of the connection is displayed

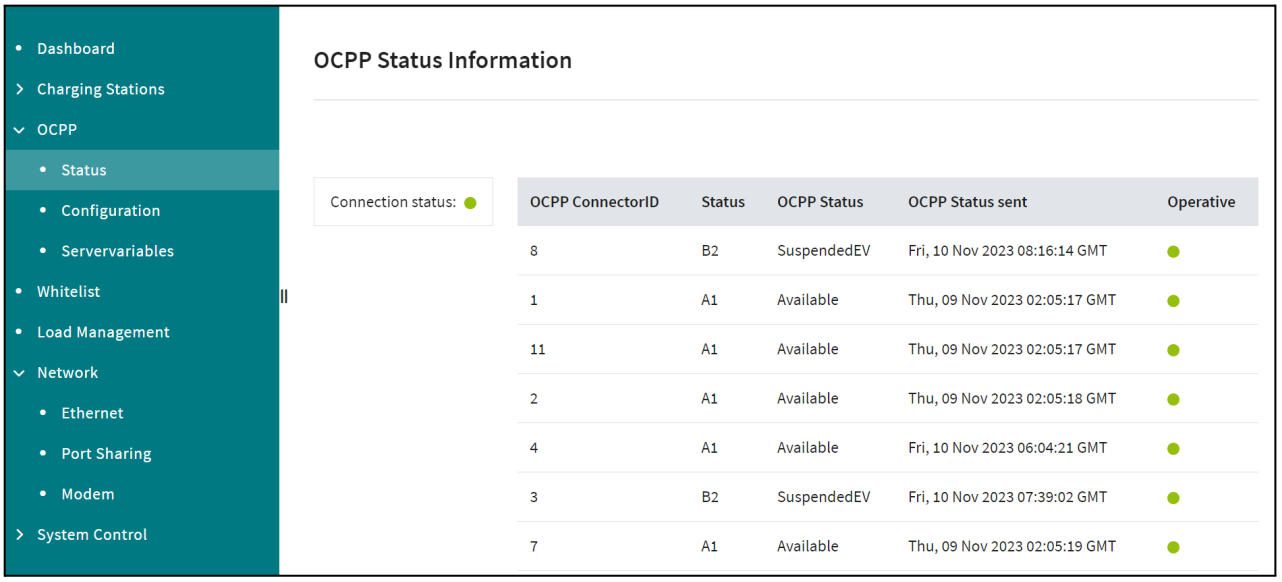

The current connection status to the OCPP management system is displayed on the status page.

- Green display: Connection established
- Red display: Connection does not exist

If there is no connection, the settings for the modem or the Ethernet interface should be checked in the control panel.

The status page also contains information on the charging points controlled via the backend. The last 50 messages between the charge controller and the backend can be tracked.

Menu does not show any OCPP charging points

If the menu does not display any or all charging points, the configurations should be checked.

- In the "Charging point configuration" -> "Charging release" area
- Check for correct configuration: "OCPP release" for all OCPP-controlled charging points
- Check for valid OCPP ID assignment of all OCPP-controlled charging points

The list contains the last messages that were exchanged with the OCPP backend in the header:

- time stamp of the transmission
- message type (2 = CALL, 3 = CALL RESULT)
- message ID (Unique ID of the message, CALL and the associated CALL RESULT used)
- action (OCPP instruction/message)
- User data (payload) with the respective user data associated with the action

9.7 Local release list without backend

If a local release list is to be created so that only selected users receive a charging release, this is possible in the "Release list" area. Each charging station has its own RFID that can be used to release the respective charging point.

Each loading park includes an optional release list to which loading authorizations can be added. The release list of the CHARX SEC-3xxx modules is not limited to a specific number of users. Different actions can be carried out.

In charging parks that support charging controllers with ISO 15118 communication, both the RFID UIDs and the EVCC ID of the vehicle can be included in the release list. This enables automatic detection and release of the charging process if a vehicle supports ISO 15118 communication.

The local release list can be exported, whereby the user list is saved as a csv file in the download area.

A release list can also be imported, for which there are two options.

a) Imported user shares can be added to the share list. To do this, use the "Add from file" button.

b) The release list can be overwritten by a file. To do this, use the "Overwrite with file" button.

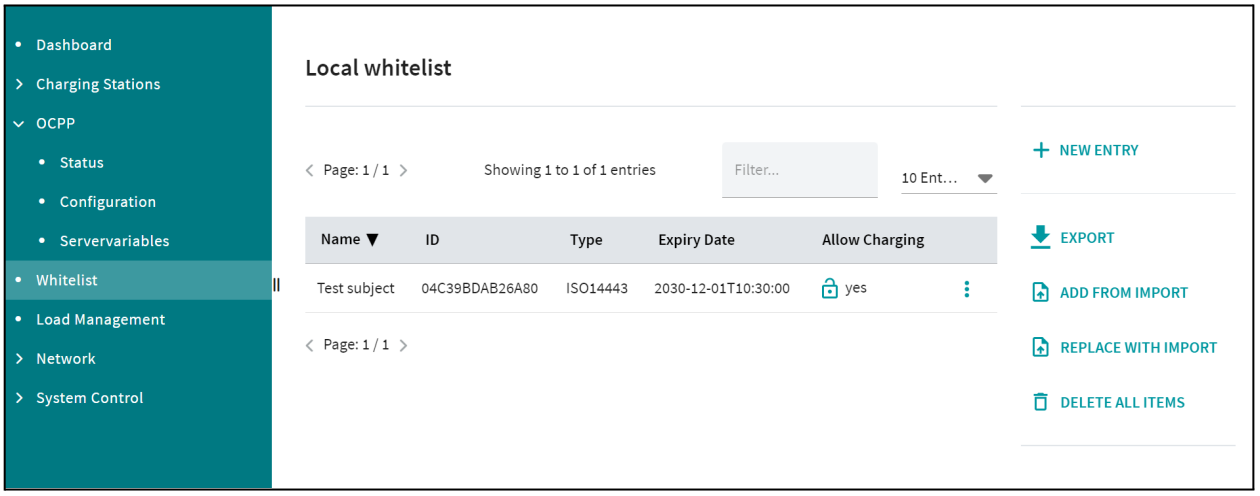

In addition, new user approvals can be added individually using the "+ New entry" button. To do this, either the number of the RFID tag used must be entered or it is scanned at a charging station. The last RFID tag used is displayed and can be used directly. An expiry date can also be added to this RFID tag so that it only has a periodic release.

In the "Charging station" -> "Configuration" -> "Charging release" area, the release mode must be changed to "Via local release list".

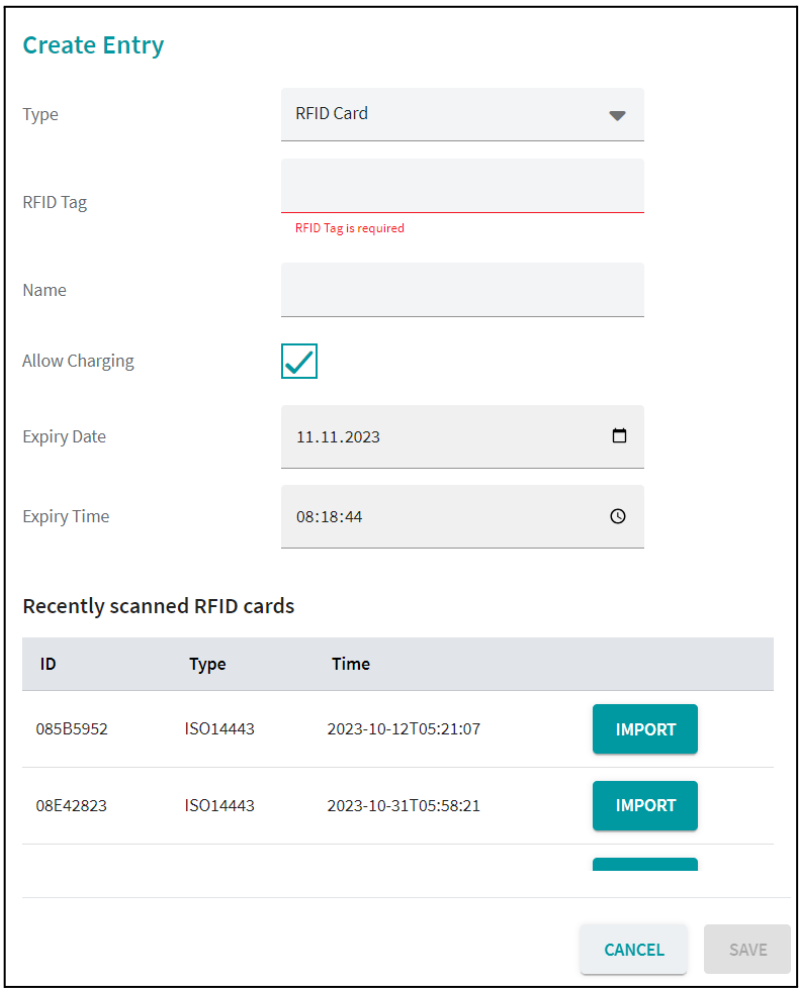

9.8 Solutions for load release

You can set the charging station using different release options, depending on the installation location and use. To do this, open the charging stations individually. Under the "Configuration" tab, you can then make the desired settings in the "Charging release" area.

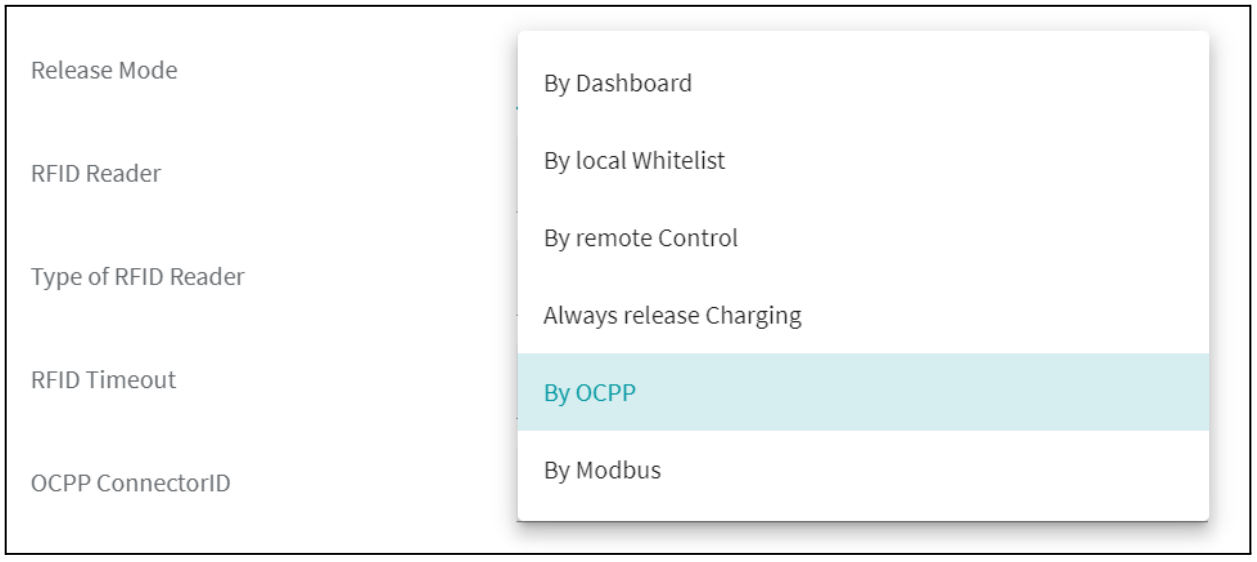

1. <u>Via Dashboard</u>

Approval is only granted via the website and must be granted manually. This is possible on the dashboard and the status page of the charge controller.

2. Via external controll

The release is granted and removed again via an external system. The release is issued via the REST API or Modbus, for example.

3. Permanent charge release

The loading release is permanently on and will not be removed. The charging release cannot be removed via the website. If the charging release is to be removed, the charging point can be unlocked or blocked.

4. Via Modbus

The release is granted and removed again via the Modbus registers. An additional release via the website is not possible.

If a backend is set up, sharing only works via OCCP. As soon as something else is selected, the backend no longer works.

9.9 Charging park / load management

Static load management can be set via the charge controller in the "Load management" area.

The load management website for the charging park is divided into three parts. The current load management status can be seen at the top of the page. Below this, configurations can be defined and charging points can be added to load management.

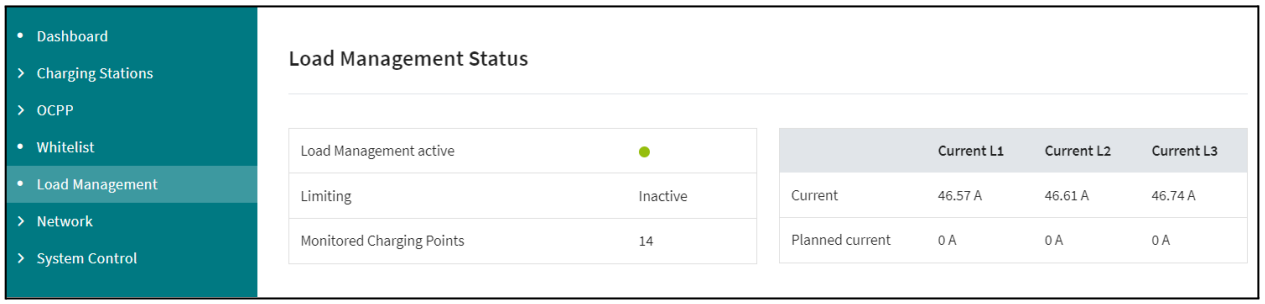

Charging park | Load management	
Load management status	
Load management active	A colored display indicates whether the load management agent is running in the charge controller. Green: The load management agent is running. Red: The load management agent is not running.
Limitation	Indicates whether the charging current is being limited. In this case, the load circuit protection value is below the current required by the electric vehicles.
Monitored charging points	Shows how many charging points are monitored by load management.
Actual currents	Displays the total charging currents at all monitored charging points.
Planned currents	Displays the planned totalized currents at all monitored charging points. The planned currents reflect the specifications for the

	vehicles. The actual current is usually slightly below this target current. There is no need for action here because the cars set the current with a safety margin to the specification.
Load management configuration	
Charge park name	The name of the charging park can be defined.
Load circuit protection value	The fuse value upstream of the load circuit in amperes. The fuse value applies to all charging points connected to the feed-in. This value determines the maximum amount of current all connected charging points may receive.
Superordinate measuring device	If other consumers are connected to the same fuse as the charging park, a higher-level measuring device can record the total current. This ensures that the load circuit fuse value is maintained, even if the charging points are significantly below this current value. The meter is configured via the connection type. - Deactivated: No higher-level measuring device is connected. - TCP/IP connection: The higher-level meter is connected via a network connection. - RS485 connection: The higher-level meter is connected to the charging interface of a charging controller via the RS485 connection. Only energy meters of the same type can be connected to an RS485 interface. The Modbus address of the higher-level meter must be set to "Factory setting +1".
Configured RS485 controller	The charging point to which the meter is connected is selected here. Only available if "RS485 connection" is selected.
IP address	The IP address of the measuring device is entered here. Only available if "TCP/IP connection" is selected.
Type of energy meter	Here you can select the energy meter type that belongs to the meter configured via the IP address. – Phoenix Contact EEM377 EEM-EM377, 2908590 – Phoenix Contact MA370 EEM-MA370-R, 2907980; EEM-MA370-24DC, 1127059; EEM-MA370, 2907983
Charging strategy	Selection of the possible charging strategy. Equal distribution: All charging points are given the same specifications. There is no prioritization of charging points.
Charging management charging points	
	You can add charging points to load management here. Selected charging points are assigned to the load circuit.

In addition to the selected charging strategy, further optimizations are made that have no priority for a specific charging point.

- If a specification exceeds the desired charging current of a vehicle, the remaining charging current is distributed to the other charging points. This redistribution is checked and repeated at regular intervals.
- The redistribution is phase-accurate. In the event of uneven distribution, any current remaining on one phase is taken into account in the calculation and reallocated

elsewhere in the redistribution. This ensures that the highest possible current is distributed to single-phase, two-phase and three-phase vehicles.

- Reducing the charging current specifications may not be sufficient to charge below the load circuit protection value. This can happen, for example, due to a high utilization of the parking space. In this case, individual vehicles are switched off by the load management. The vehicles with the highest charge level are switched off first. They can be switched on again as part of a redistribution.

9.9 Time and date

If the charging station is operated with the Internet or a SIM card, the respective time and date are set automatically. This is important in order to establish a connection with the OCCP server and is relevant for the S.A.F.E. software in the context of compliance with calibration law. The current system time and date can be viewed and set via the "System control" -> "Time" area.

It is possible to adopt the time set on the PC from the web browser.

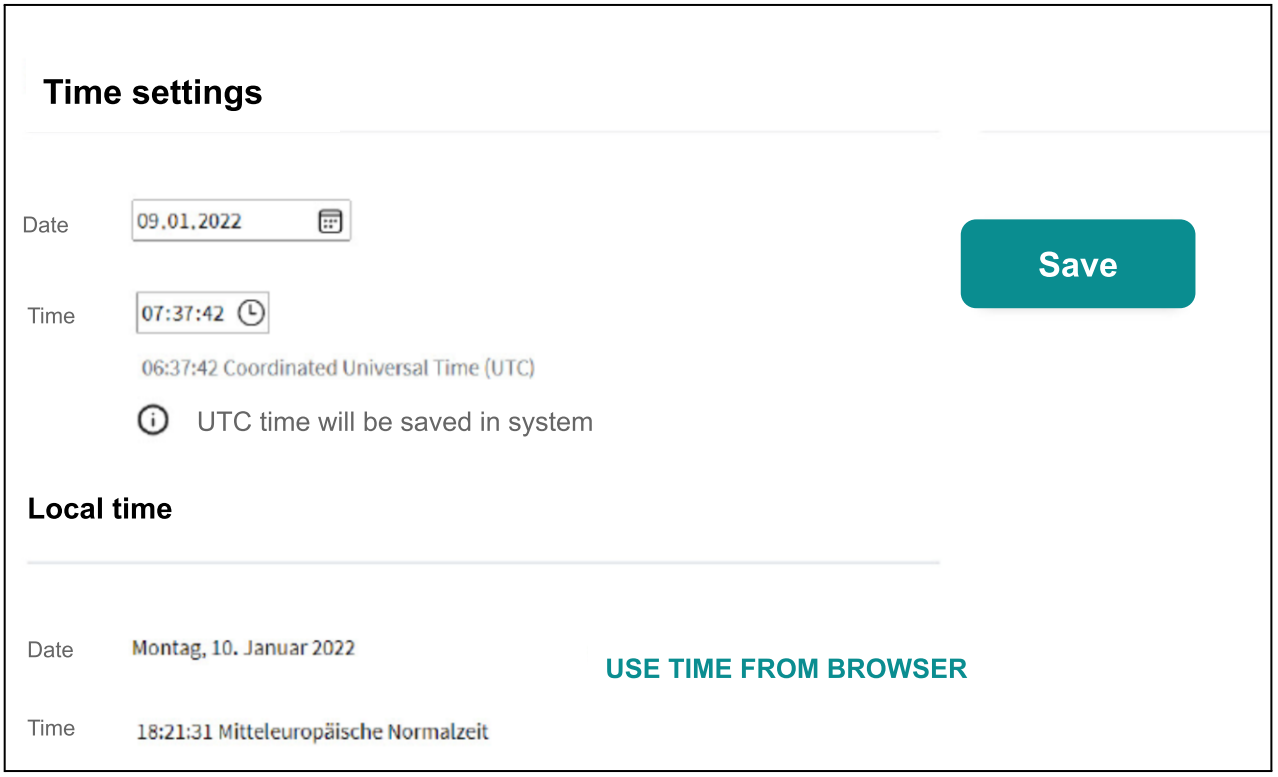

UTC time used internally by the system

The charge controller works internally with the UTC time and uses this for time stamps in the logging files and in the OCPP communication.

Transfer of the OCPP timestamp to the system time

Timestamps from an OCPP backend are transferred to the system time of the charge controller. This assumes that the UTC time is sent.

9.10 Software update

The charging stations are always updated to the latest software version during production, but a new update may be released in the time between production and delivery.

For this reason, it is advisable to check the software during initial commissioning.

The currently installed version of the software can be viewed in the dashboard under "Control Panel" -> "Software".

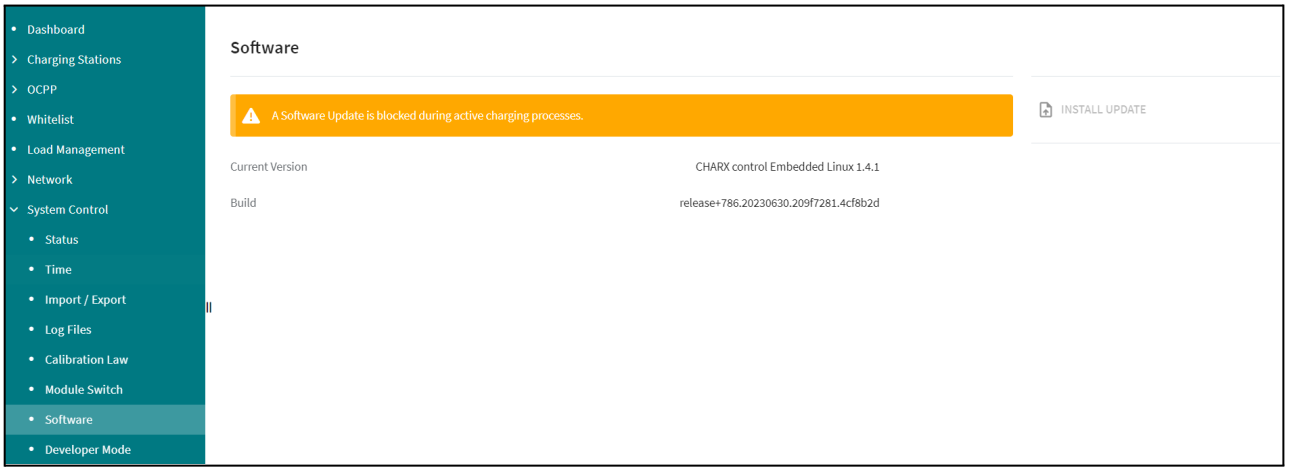

Before installing an update, end all charging processes and disconnect all vehicles from the device.

Steps:

1. Download the latest software version, available on the Phoenix website Contact https://www.phoenixcontact.com/de-de/produkte/ac-ladesteuerung-charx-sec-3150-1138965

   - im Website-Menü unter “Downloads” -> “Software Updates” auswählen
   - Download file: “CHARX SEC-3XXX Software Bundle V1.X.X” (multi-lingual)

If the versions on the charging station and on the website are identical, the update does not need to be installed, as the latest software version is already available in this case.

2. Installation of the current software version:
   - in the dashboard menu in the "Control Panel" -> "Software" -> select the "INSTALL UPDATE" button
   - Select the previously downloaded file via the "Select file" button
   - Start installation by clicking on the "Install update" button

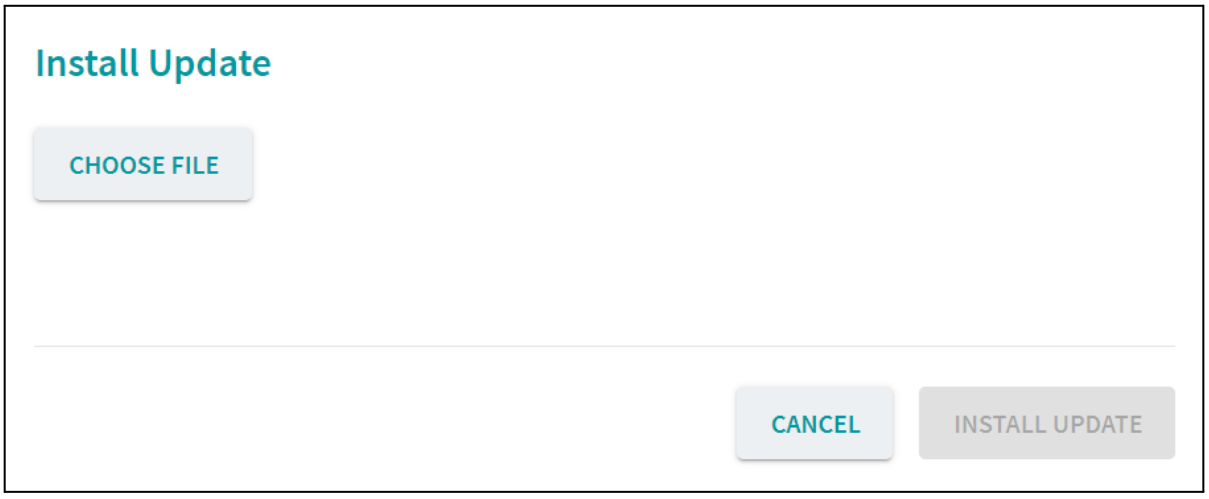

3. Complete the update
   - the installation process may take a few minutes.
   - after the process has ended, click on the "Restart now" button

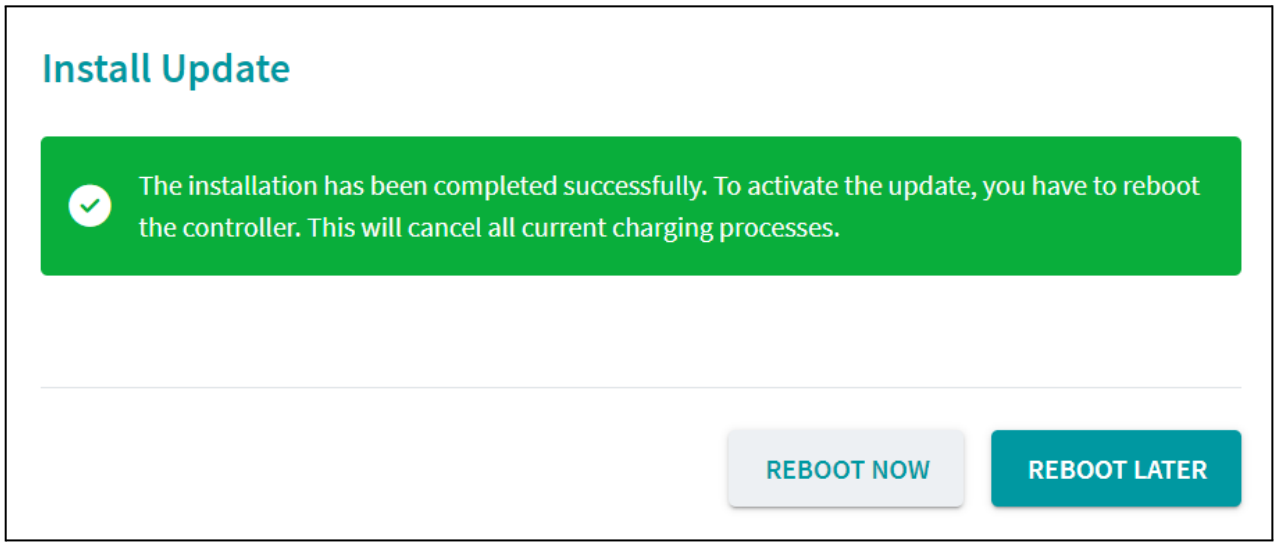

The charging station will power up and down several times during this time, so it may take a few minutes before you can reconnect.

10. Decommissioning and disassembly

The activities in this chapter may only be carried out by qualified electricians.

Disconnect power cables

- Open device -> "4.4 Open device"
- Disconnect the supply line.
- Feed the power cables out of the housing through the cable gland.

Dismantling the device

- Remove the countersunk screws from the mast
- Lifting the appliance from the base plate
- Close device -> "4.9 Close device"

11. Storage

Proper storage can have a positive effect on the operational capability of the device and maintain it in the long term. The following points must be observed:

- Cleaning the appliance before storage
- Store the device clean and dry in its original packaging or with suitable packaging materials

- Observe the permissible storage conditions:

Permissible storage conditions:	
Storage temperature	-25'C... + 40 'C
Average temperature in 24 hours	< 35 'C
Relative humidity	max.95 %(non condensing)

12. Waste disposal

The device and packaging must be disposed of properly at the end of use. The national legal regulations of the country of use must be observed for disposal and environmental protection. Old appliances and batteries must not be disposed of with household waste. The following points must be observed:

- Disposal of packaging material in designated collection containers
- Disposal of old appliances and batteries via the responsible specialist dealer

13. Glossary

Term	Explanation
FI switch / RCD	Residual current circuit-breaker Type A= pulse current sensitive ; Type B = universal current sensitive
LS breaker	Miniature circuit breaker
MID meter	Measuring Instruments Directive; certified energy meter
Mode3 (IEC 61851)	Charging mode for vehicles with communication interface on Type 2 charging connectors.
OCPP	Open Charge Point Protocol; standardized open-source communication protocol for charging station software systems
RFID	Radio-Frequency-Identification; Technology for authentication at the charging station
RCM	Residual Current Monitoring; Monitoring relay for residual currents or fault or residual currents
Type 2 (IEC 62196-2)	Single-phase and three-phase charging plugs with identical plug geometry for charging capacities from 3.7 to 44 kW AC.
UTC time	Coordinated Universal Time
WBM	Web-based Management; Online configuration interface and central database interface for the charge controller

11.2022 Version EN

RZB
Rudolf Zimmermann,
Bamberg GmbH

Rheinstr. 16
96052 Bamberg
Deutschland

Telefon +49 951 79 09-0

www.rzb-energy.de
info@rzb-energy.de

More Information?