ASSEMBLY INSTRUCTIONS

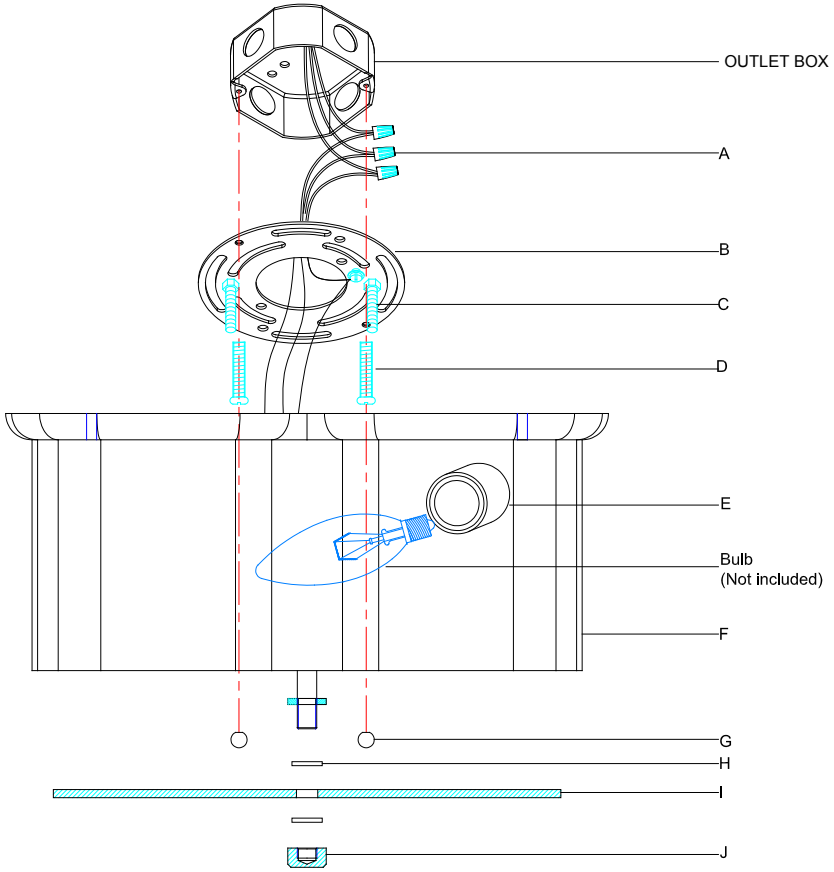

Bolsena Deco Flush Mount

Item # ARN 4047

WE RECOMMEND INSTALLATION OF THIS LIGHTING FIXTURE BE DONE BY A LICENSED ELECTRICIAN.

WARNING*SWITCH OFF THE MAIN ELECTRICAL SUPPLY FROM THE MAIN FUSE BOX/CIRCUIT BREAKER BEFORE INSTALLATION.**

INSPECT ITEM CAREFULLY BEFORE ATTEMPTING TO INSTALL. IF THERE IS ANY DAMAGE OR OBVIOUS DEFECT. DO NOT INSTALL.

ITEM MAY NOT BE RETURNED ONCE IT HAS BEEN INSTALLED.

1. Carefully remove all parts from the box.
2. Remove the mounting plate (B) from the fixture (F) by loosening the finials (G).
3. Affix mounting plate (B) onto the outlet box and secure with mounting screws (D).
4. Connect the hot wire (BLACK) from the fixture to the hot wire from the outlet box (usually BLACK). Fasten them together with a plastic wire connector (A) provided and wrap the connection with electrical tape.
5. Connect the neutral wire (WHITE) from the fixture to the wire from the outlet box (usually WHITE).
   DO NOT REVERSE THE HOT AND NEUTRAL CONNECTIONS OR SAFETY WILL BE COMPROMISED.
6. Connect ground wire from the fixture (bare copper) to ground wire from the outlet box (usually green or copper in color).
   IT IS IMPERATIVE THAT THIS FIXTURE BE GROUNDED.
7. Attach the fixture onto the mounting plate (B). Let screws (C) pass through the holes on the top of the fixture, and secure with finials (G).
8. Insert bulbs (not included) into the sockets.
9. Install the diffuser (I) to the fixture bottom and secure with washers (H) and finial (J).
10. Installation is complete, turn on power at fuse or circuit breaker.

***Clean with a dry, soft cloth only. Use no harsh abrasives or chemical agents.

DAMP

VISUAL COMFORT & CO. Est. 1987