10x10ft Round Market Umbrella, Artwork Design Template

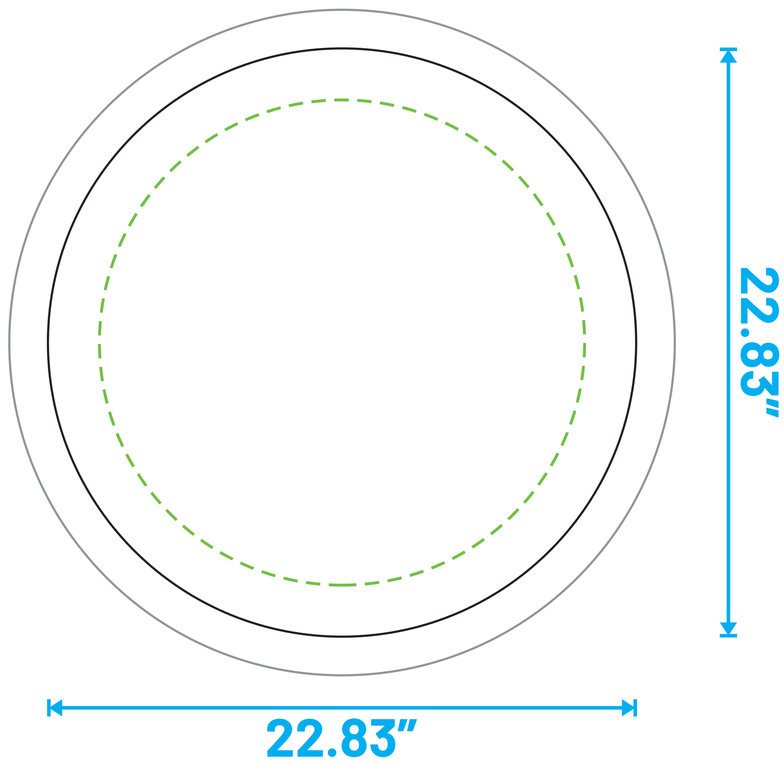

TOP

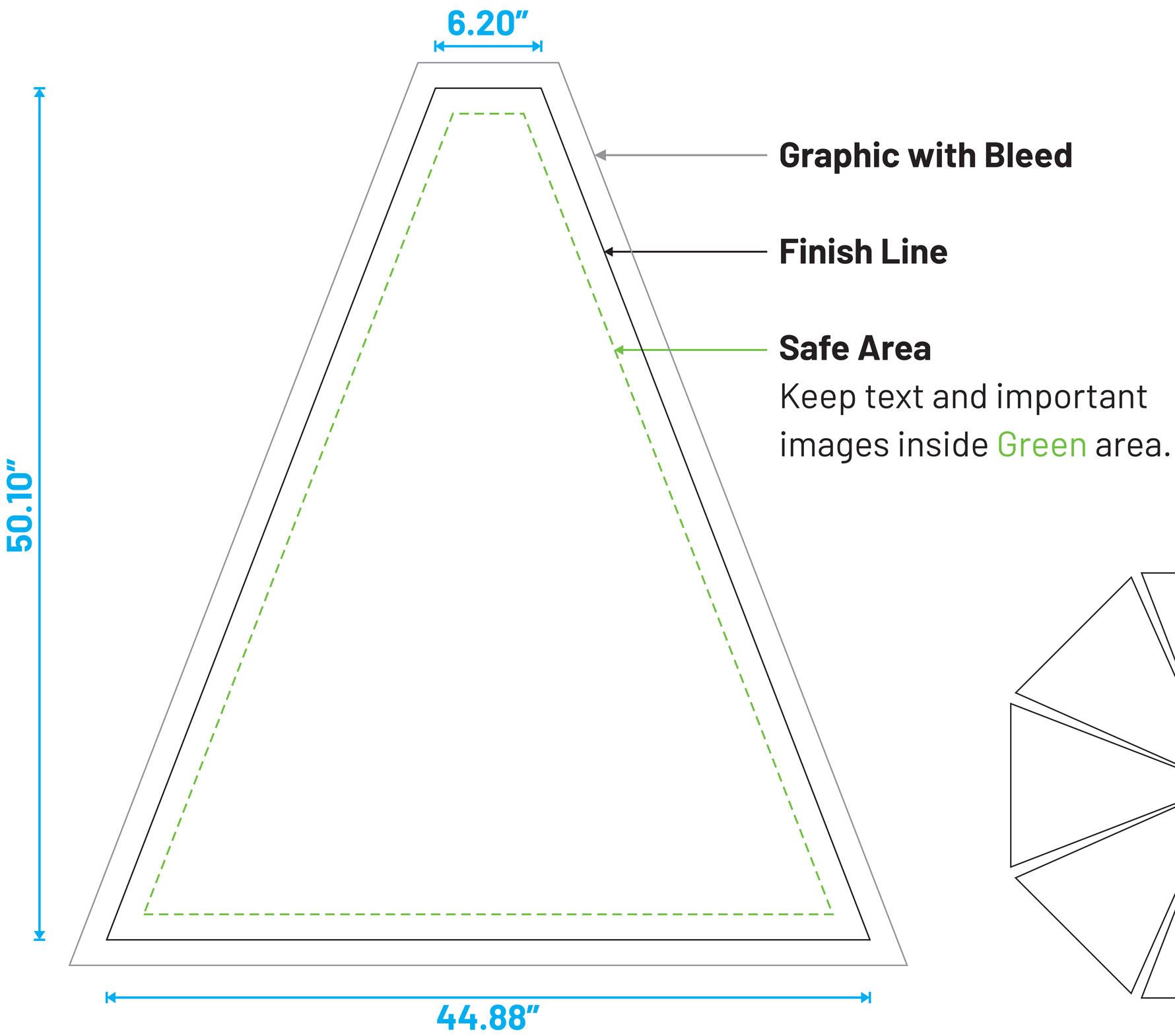

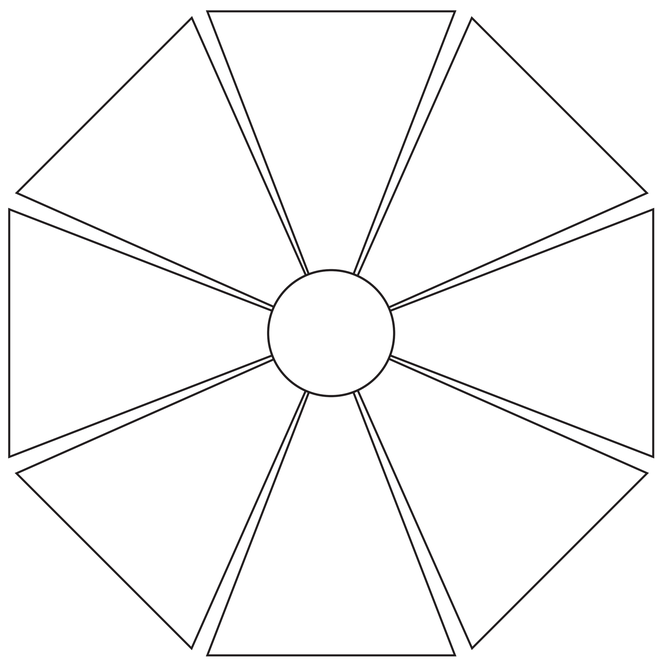

PANEL- SAME SIZE FOR ALL 8 SIDES

- Use vector logos if possible for best results
- Use CMYK color mode
- Mention PMS color code when used in artwork design
- Use C75, M68, Y67, K90 to obtain a rich black color
- Make sure image resolution is 96-150 dpi
- Convert all fonts to outlines
- Convert strokes/outlines to object
- Embed all images in final document
- Save final document as PDF or TIFF/TIF for print
- Delete instructions from template before use

Important Note:
If the artwork contains transparent elements, drop shadows, special effects or vector patterns, then please flatten it and submit the artwork in TIFF format (96-150 dpi resolution).