Installation Specifications
Item 8002
EZ Install Spice Rack

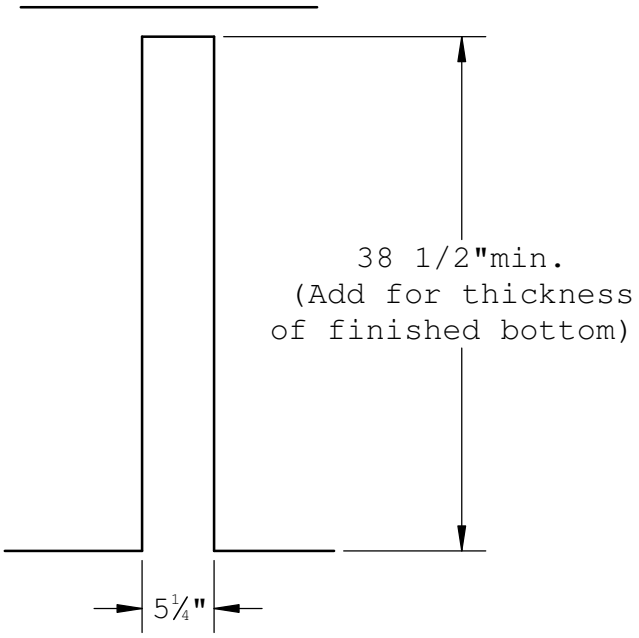

FRONT VIEW

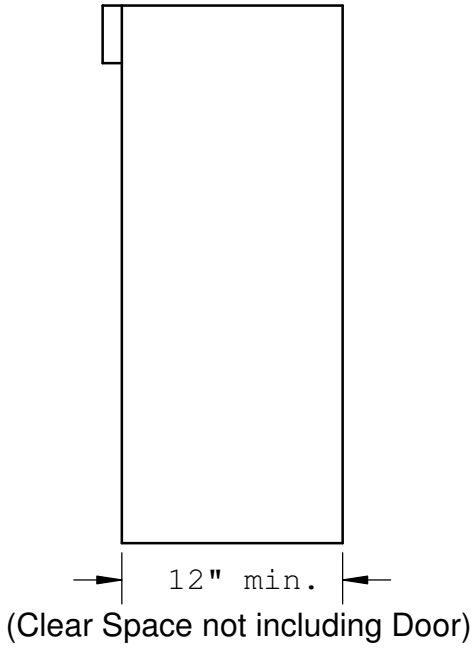

SIDE VIEW

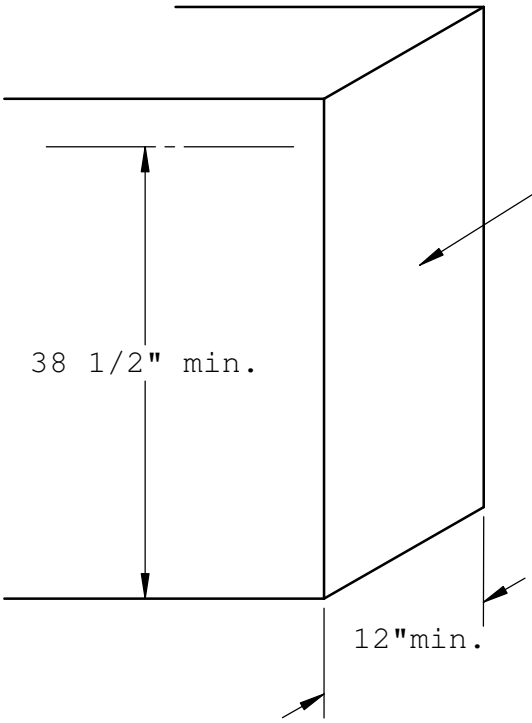

Flat end panel required for mounting back side of Dropout Spice Rack Cabinet (This surface must be secure for mounting Right Facing Unit, reverse for Left Facing Unit).

NOTE: THE DOOR PANEL TO BE ATTACHED TO THE DROPOUT SPICE RACK SHOULD NOT EXCEED 5 LBS. INCLUDING THE HANDLE. OVER SIZED DOORS WILL REDUCE THE WEIGHT CAPACITY OF THIS STORAGE SYSTEM.

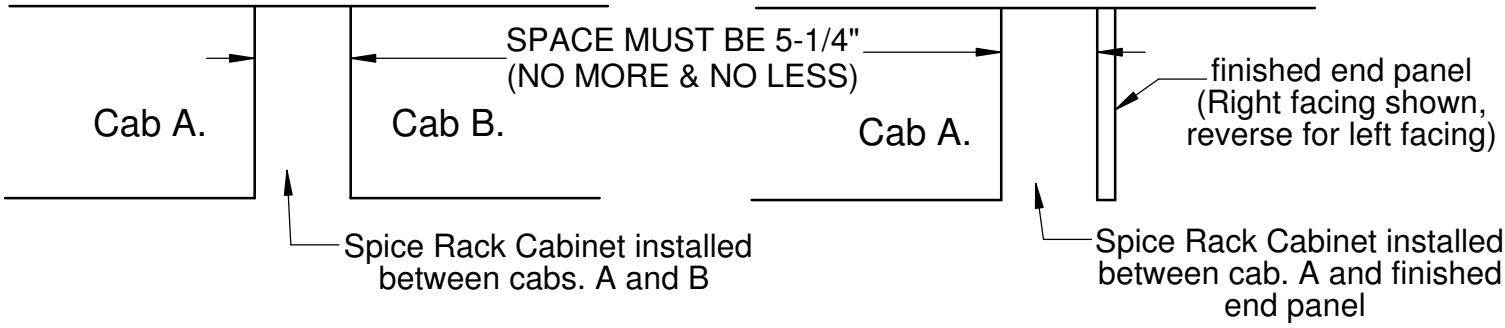

OPTION 1

OPTION 2

PLAN VIEW