MODEL 111700

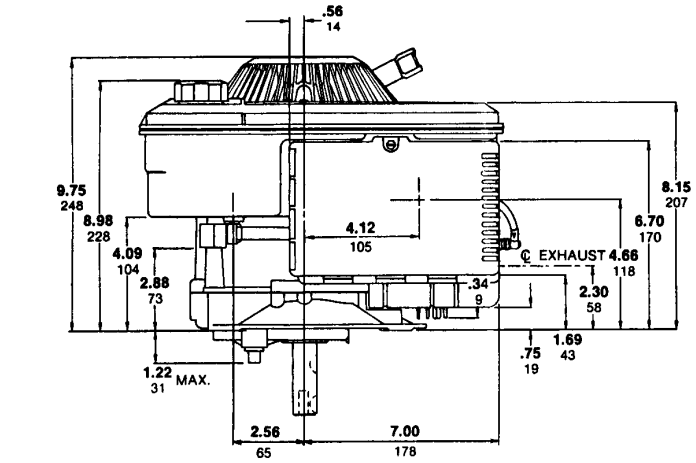

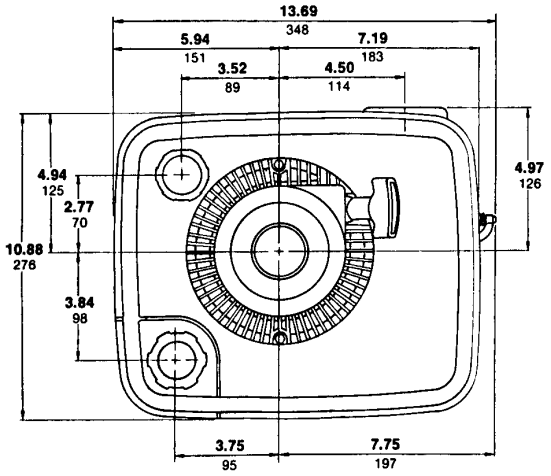

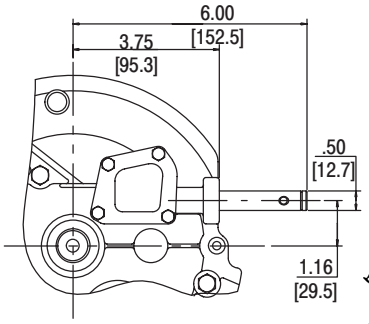

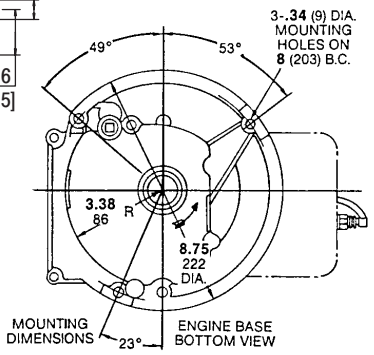

HOLE IN DECK FOR OIL SUMP TO BE **6.88** (175) DIAMETER. SUMP PROJECTION BELOW DECK MOUNTING FACE REQUIRES CLEAR SPACE.

.56 (14) DEEP x **6.88** (175) DIA. PLUG CLEARANCE FOR OIL DRAIN PLUG.
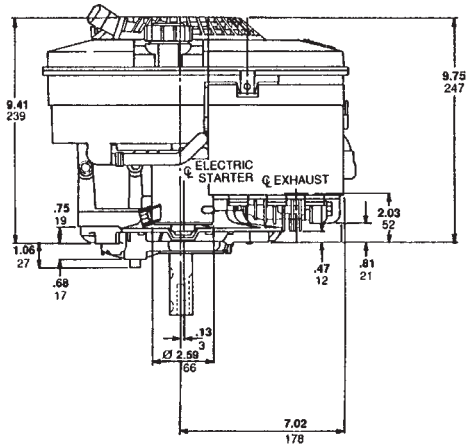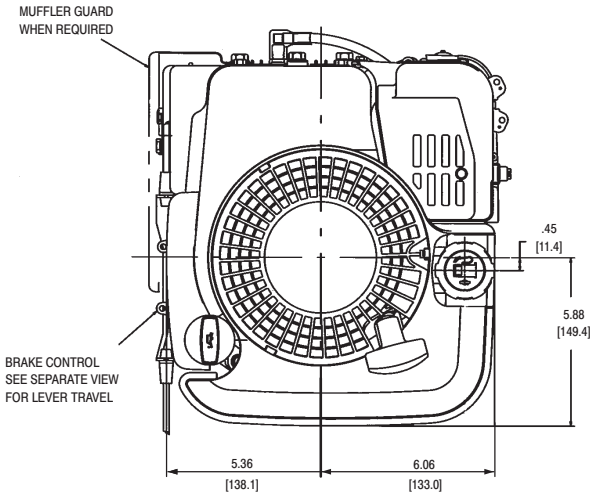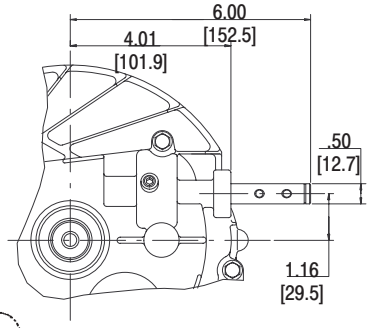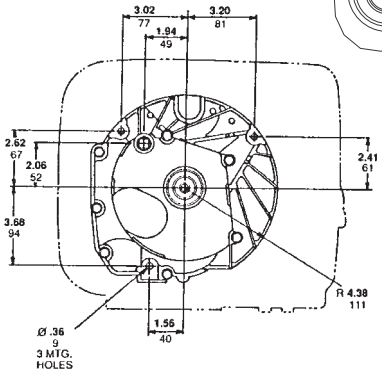
MODEL 120000