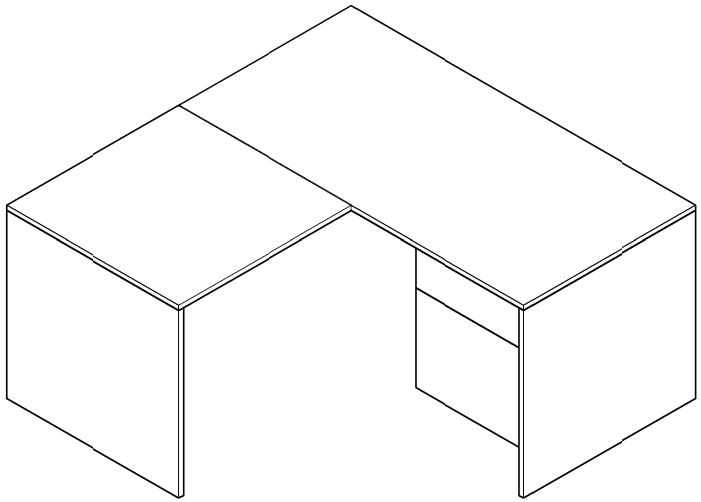

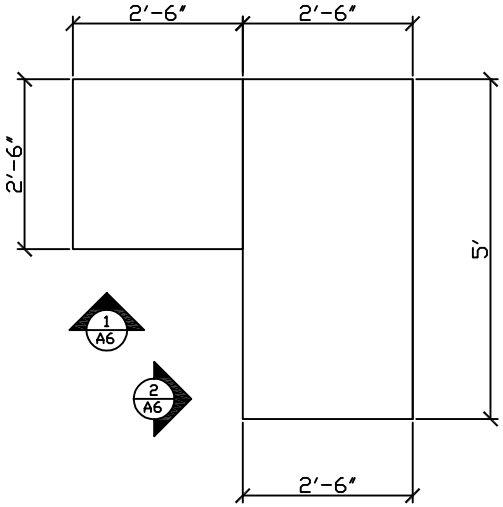

60" x 60" x 29"
L-SHAPE DESK WITH
SINGLE ¾" PEDESTAL B/F (RIGHT)

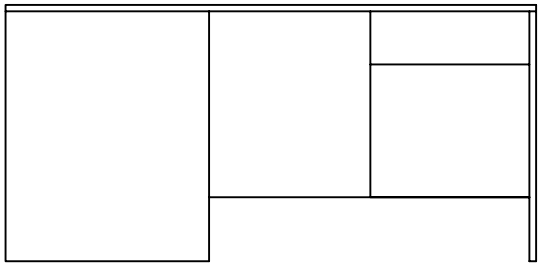

1 A6 RIGHT SIDE ELEVATION

N.T.S

ALL MEASUREMENTS MUST BE CHECKED AND VERIFIED ON THE WORK PRIOR TO CONSTRUCTION BY THE CONTRACTOR WHO WILL NOTIFY THE ARCHITECT IMMEDIATELY SHOULD ANY DISCREPANCIES BECOME APPARENT. ALL DRAWINGS, PRINTS AND SPECIFICATIONS ARE THE SOLE PROPERTY OF THE ARCHITECT MAY NOT BE REPRODUCED WITHOUT WRITTEN PERMISSION AND MUST BE RETURNED AT THE PRINTS ARE NOT TO BE SCALED.

NOTES:

TOPOULOS DESIGN GROUP
905-717-1257

TRUE NORTH | CONS. NORTH

No	DATE	ISS
20	-	-
19	-	-
18	-	-
17	-	-
16	-	-
15	-	-
14	-	-
13	-	-
12	-	-
11	-	-
10	-	-
9	-	-
8	-	-
7	-	-
6	-	-
5	-	-
4	-	-
3	-	-
2	-	-
1	-	-

REVISIONS

OFFICE DESKS

TOPOULOS DESIGN GROUP
905-717-1257

CLIENT:
BARRY'S
OFFICE FURNITURE
124 CARTWRIGHT AVE.

PROJECT:
L SHAPE DESK
66" SINGLE 3/4" PEDESTAL B/F (RIGHT)

DRAWN BY: CPM | SCALE: AS NOTED
DATE: DD/MM/YY | CHK'D: DD/MM/YY

PROJECT No.: TDG23-005

DRAWING: A6