Kopis X8 Cinelifter 5"（Ducted Version）Assembly Guide

PART LIST

#510204 Upper Plate

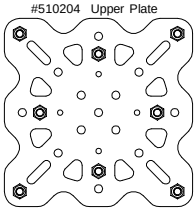

#510205 Lower Plate
（With 9 Pressure riveting nut）

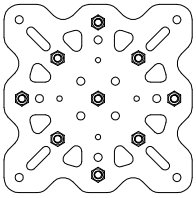

#510213 Arm 4pcs

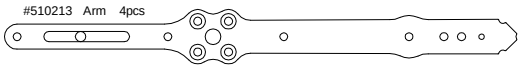

#510210 Bottom Support Plate

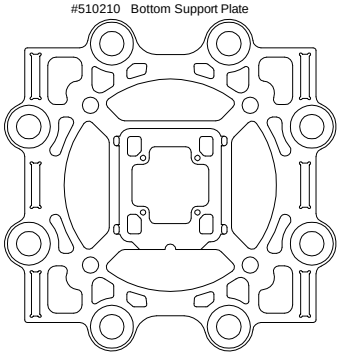

#510214 Reinforcement Arm 4pcs

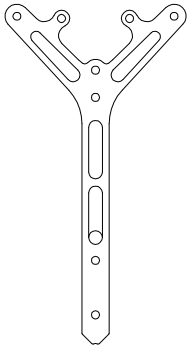

#510207 Bottom Plate

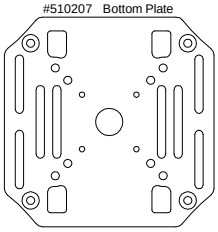

#510206 Top Reinforcement Plate
4pcs

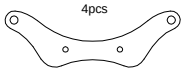

#510215 Motor Holder 8pcs

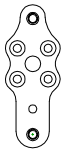

#510208 Bottom Reinforcement Plate
4pcs

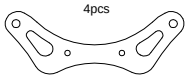

#510155 Camera Mounting Plate

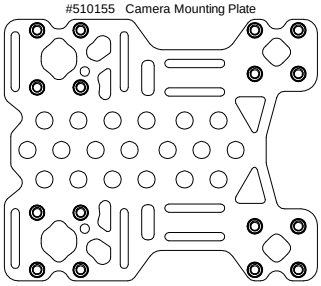

#510217 Carbon fiber tube（7mm×60mm） 4pcs

（1：1）

#510212 Side Support Plate（R）

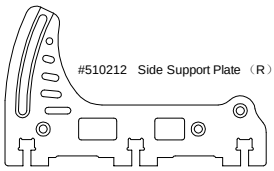

#510211 Side Support Plate（L）

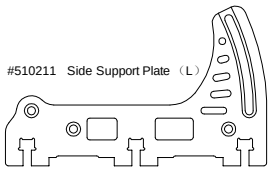

#510209 Top Plate

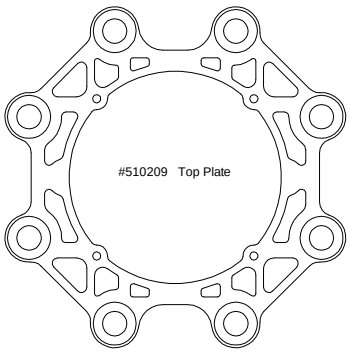

#31117 TPU 3D print set 17pcs

FPV Camera Mount

GPS Holder

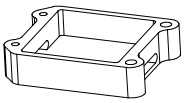

Antenna Holder

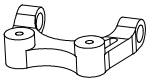

SMA Antenna Mount（L）

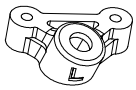

SMA Antenna Mount（R）

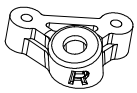

Positioning Sleeve
8pcs

Landing Gear 4pcs

Gummie M8
9pcs

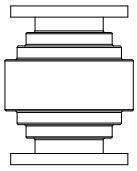

Gummie M3
8pcs

Locknut M2
4pcs

Nylon Standoff
M3*5 4pcs

Locknut M3
17pcs

Screw M3*10
10pcs

Flat Head Screw
M3*8 4pcs

Screw M3*8
50pcs

Socket Cap Screw
M3*5 34pcs

Screw M3*16
4pcs

Screw M3*12
26pcs

Hand Screw
M3*8 2pcs

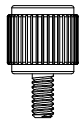

Screw M3*35 4pcs

Screw M2*14 4pcs

Metal Stud M3*16 22pcs

Aluminum Standoffs M3*37.5 34pcs

Aluminum Standoffs M3*100 4pcs

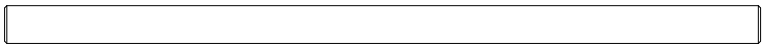

Aluminum Standoffs M3*60 4pcs

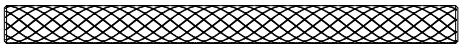

（1：1）

1

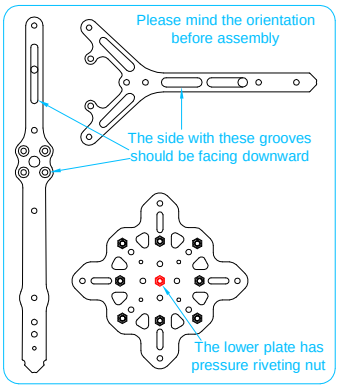

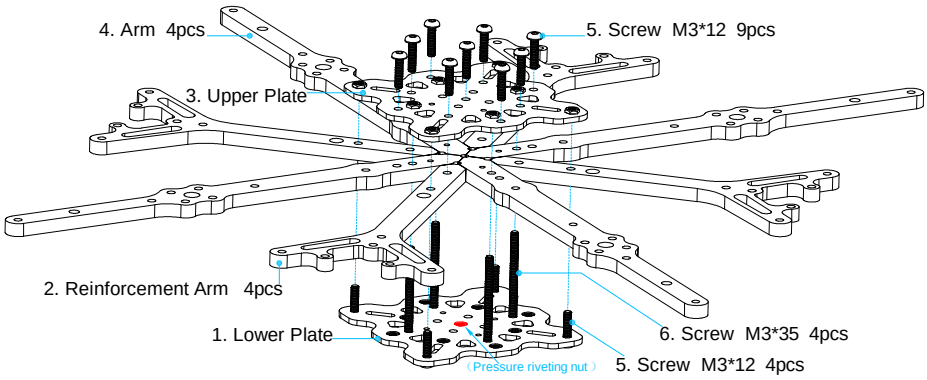

2

（Recommendation: Use blue threadlocker on the metal studs）

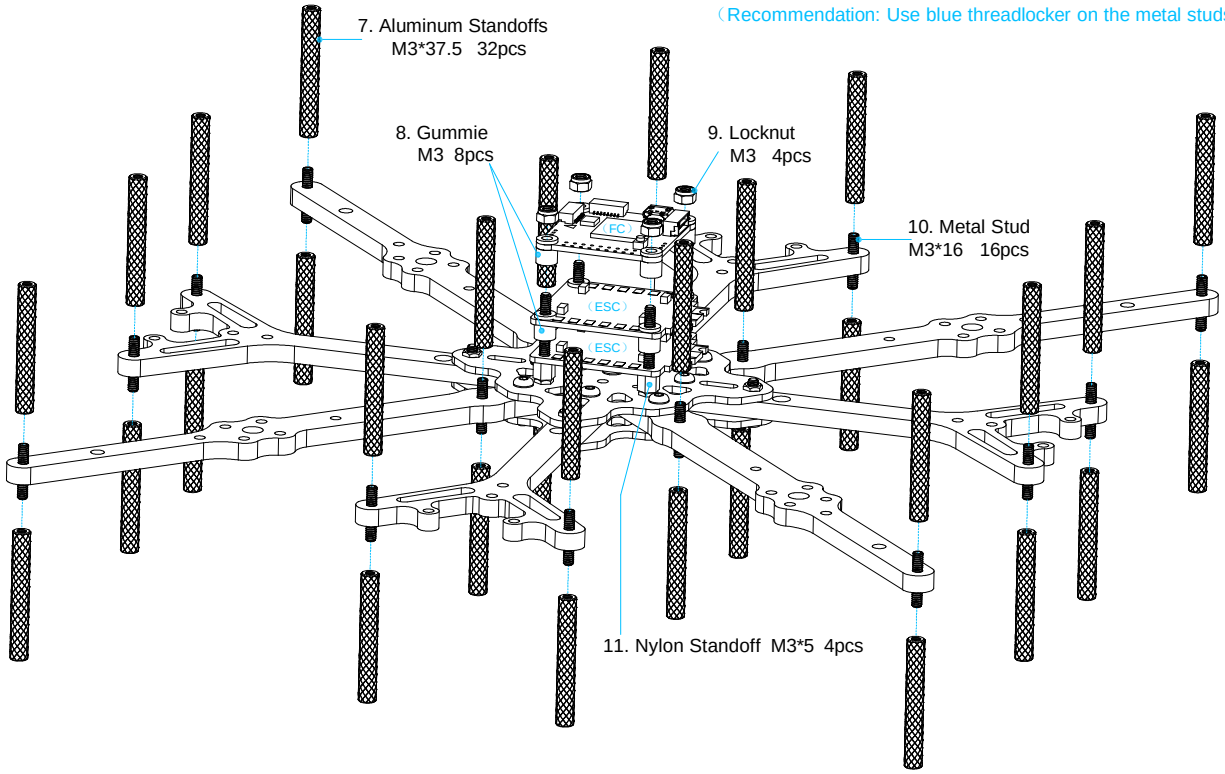

3

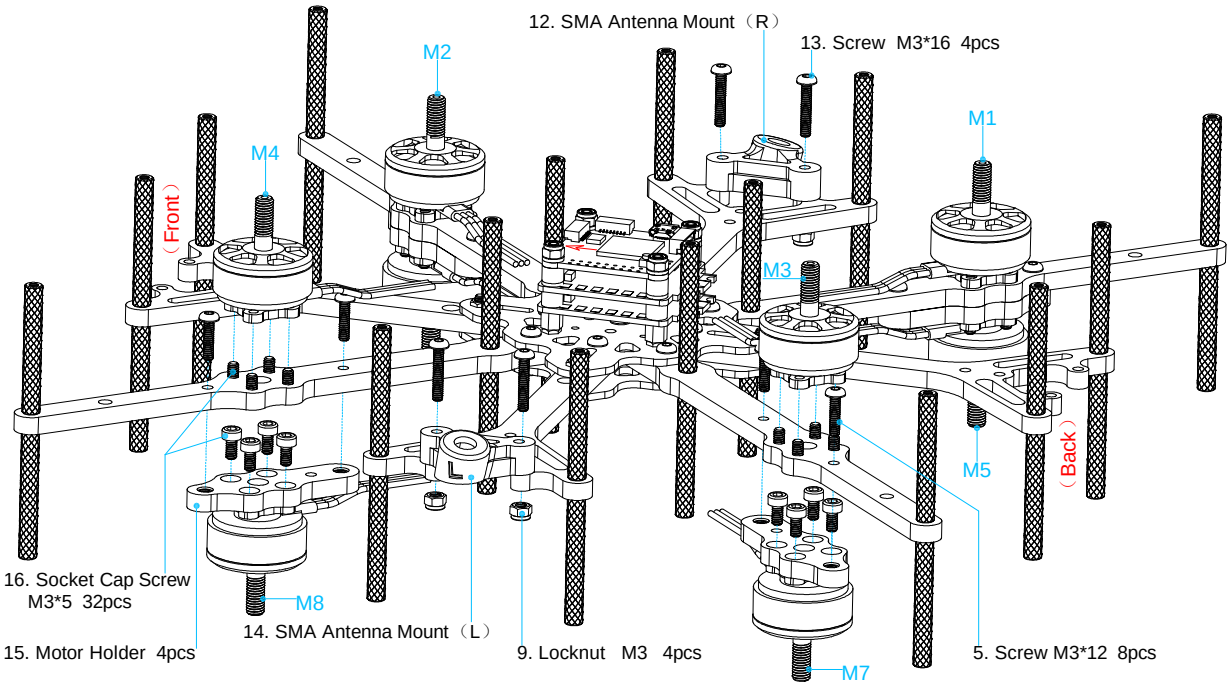

4

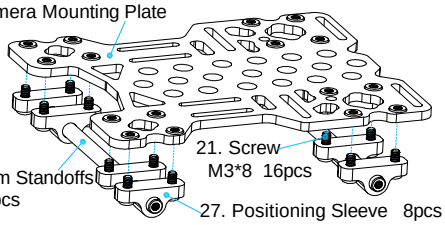
26. Camera Mounting Plate
21. Screw
M3*8 16pcs
25. Aluminum Standoffs
M3*100 2pcs
27. Positioning Sleeve 8pcs

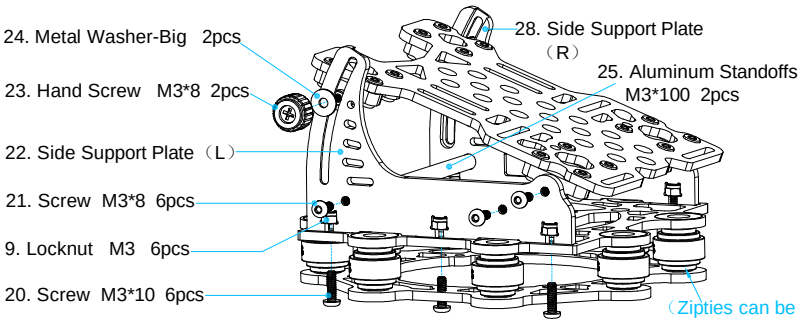
24. Metal Washer-Big 2pcs
23. Hand Screw M3*8 2pcs
22. Side Support Plate（L）
21. Screw M3*8 6pcs
9. Locknut M3 6pcs
20. Screw M3*10 6pcs
28. Side Support Plate
（R）
25. Aluminum Standoffs
M3*100 2pcs

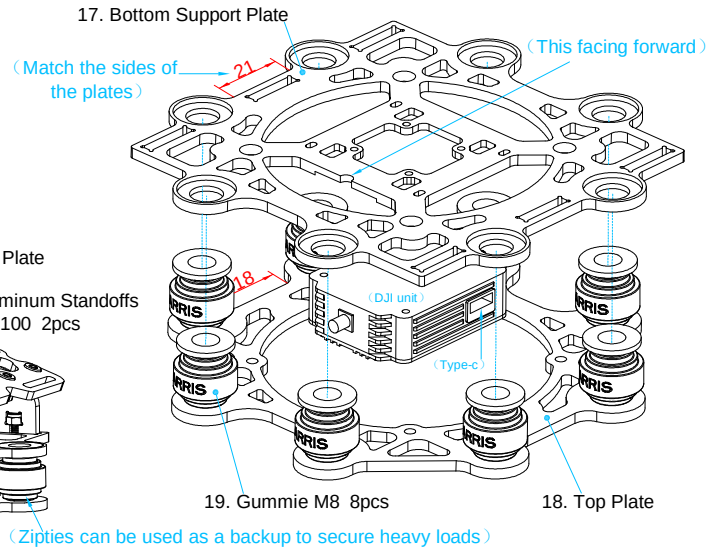
17. Bottom Support Plate
（Match the sides of the plates）
21
（This facing forward）
18
（DJI unit）
（Type-c）
19. Gummie M8 8pcs
18. Top Plate
（Zipties can be used as a backup to secure heavy loads）

5

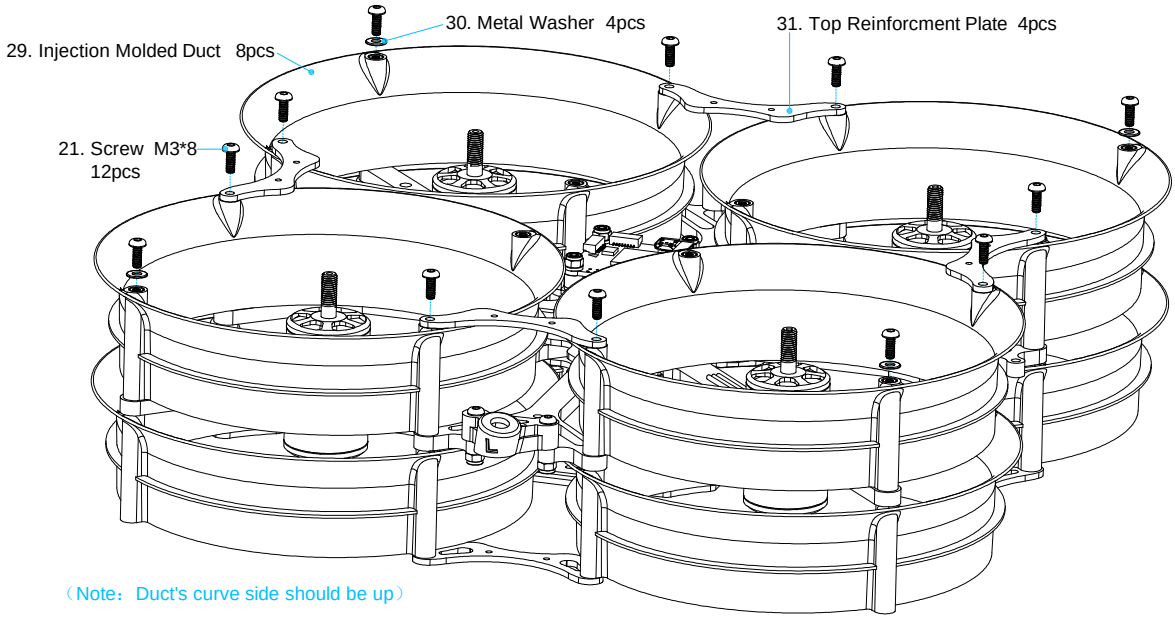
29. Injection Molded Duct 8pcs
30. Metal Washer 4pcs
31. Top Reinforcment Plate 4pcs
21. Screw M3*8
12pcs
（Note：Duct's curve side should be up）

6

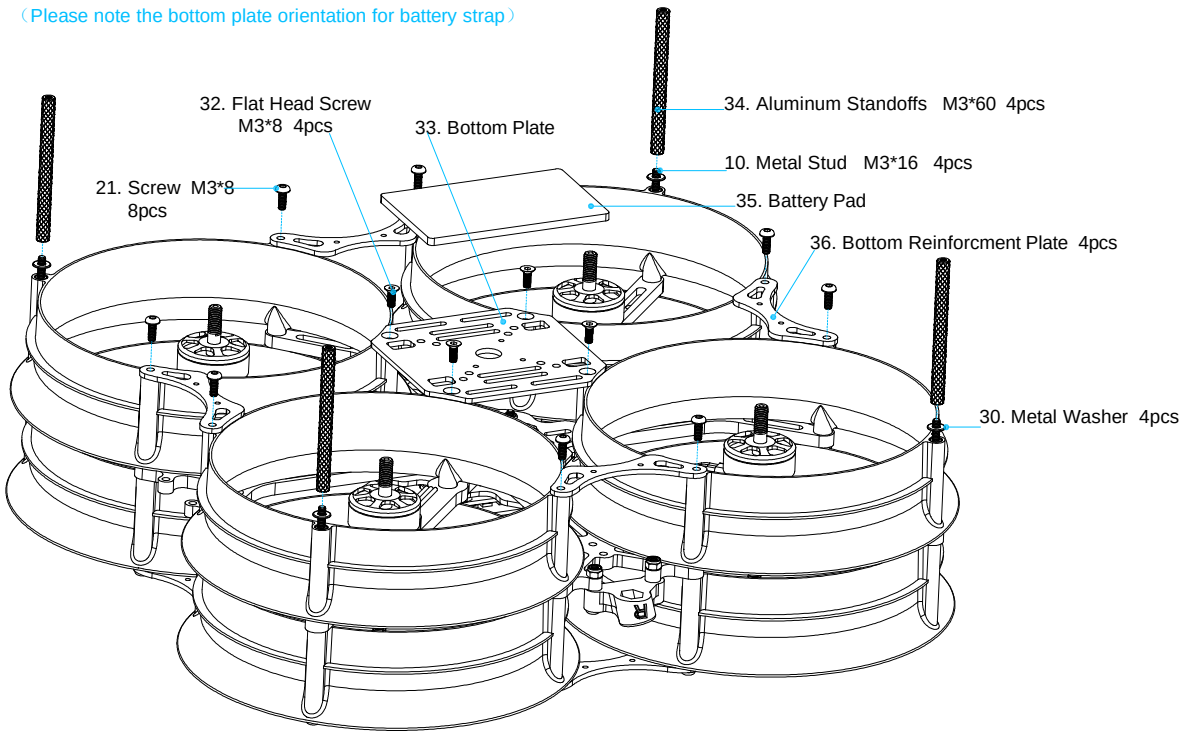
（Please note the bottom plate orientation for battery strap）
32. Flat Head Screw
M3*8 4pcs
33. Bottom Plate
34. Aluminum Standoffs M3*60 4pcs
10. Metal Stud M3*16 4pcs
21. Screw M3*8
8pcs
35. Battery Pad
36. Bottom Reinforcment Plate 4pcs
30. Metal Washer 4pcs

7

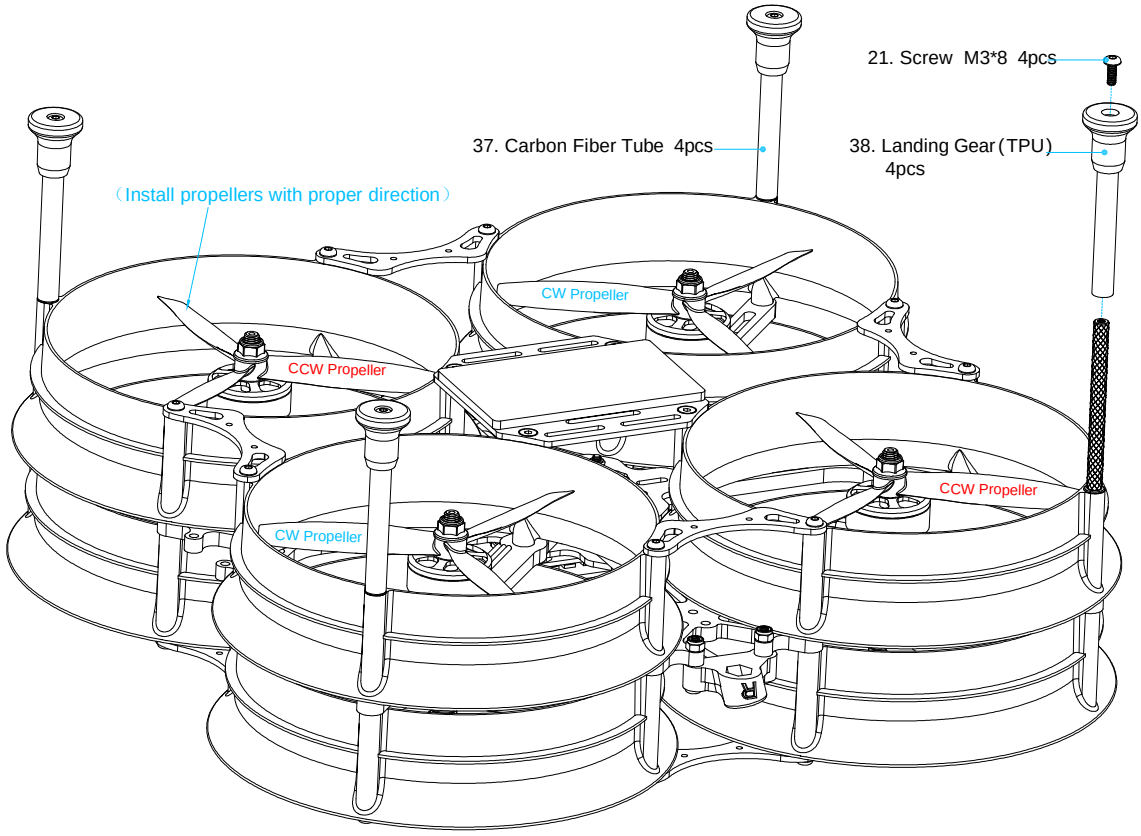
21. Screw M3*8 4pcs
37. Carbon Fiber Tube 4pcs
38. Landing Gear (TPU) 4pcs
(Install propellers with proper direction)
CW Propeller
CCW Propeller
CCW Propeller
CW Propeller

8

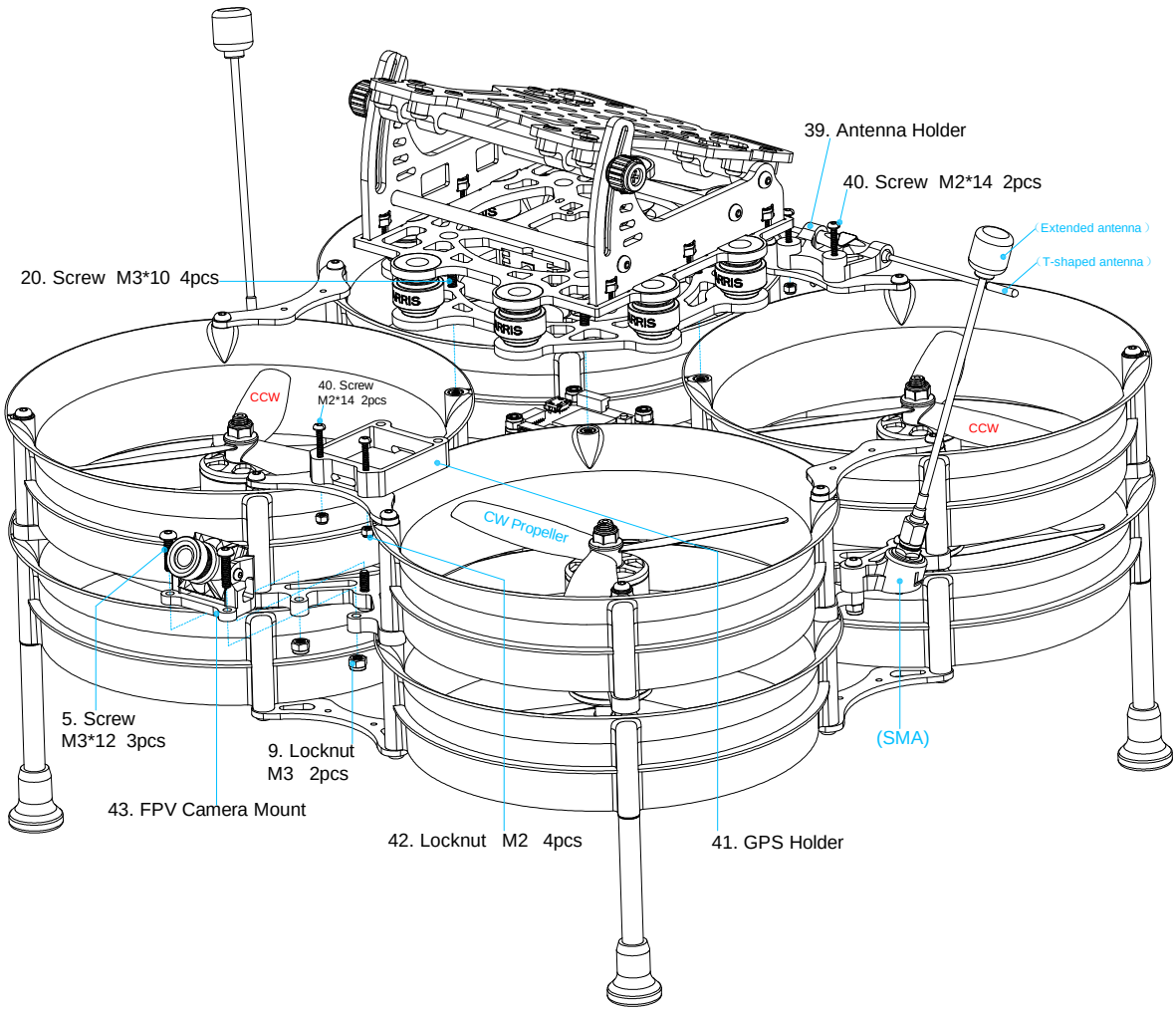
39. Antenna Holder
40. Screw M2*14 2pcs
(Extended antenna)
(T-shaped antenna)
20. Screw M3*10 4pcs
CCW
40. Screw M2*14 2pcs
CCW
CW Propeller
5. Screw M3*12 3pcs
9. Locknut M3 2pcs
43. FPV Camera Mount
42. Locknut M2 4pcs
41. GPS Holder
(SMA)