KitchenBathCollection

Helsinki 42–inch Bath Vanity
(Back View)

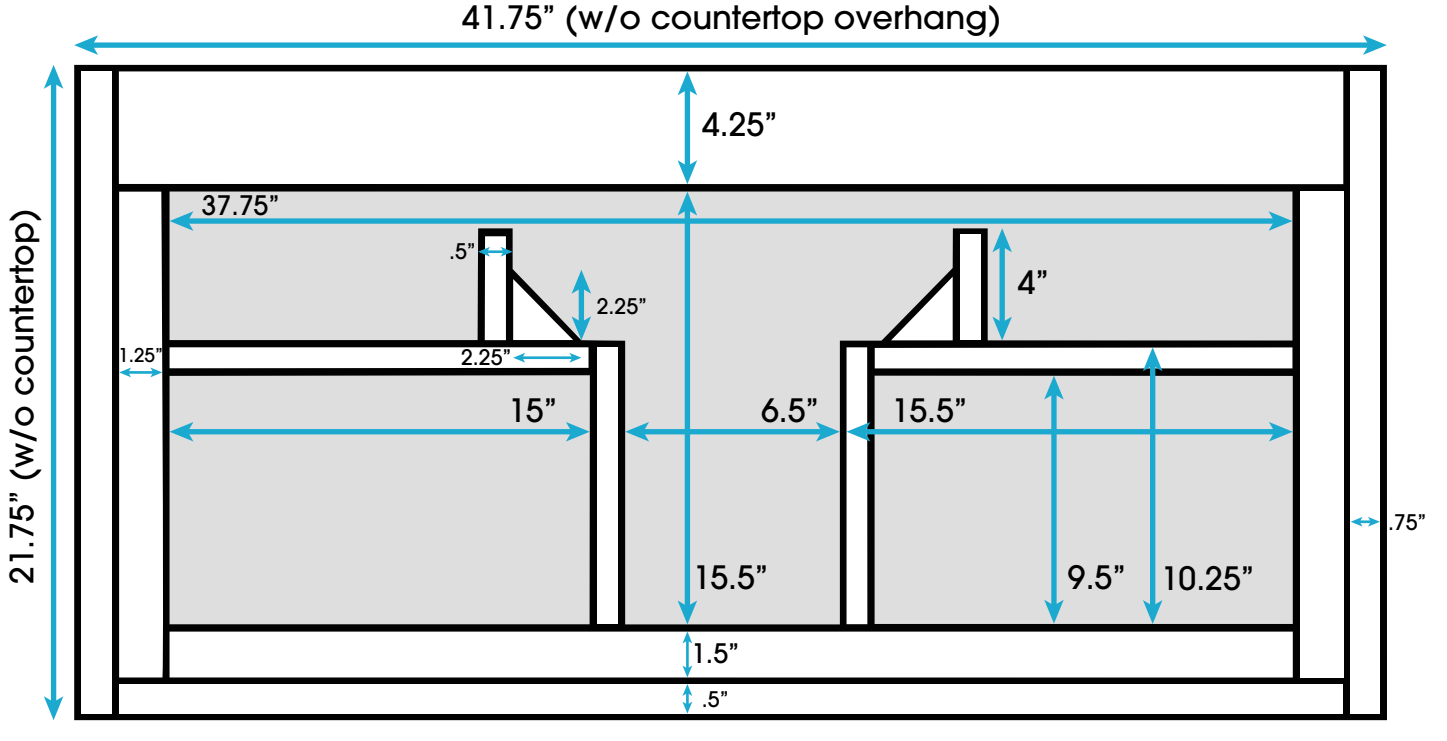

Approximate Overall Product Weight: 210 lbs

All measurements are approximate and rounded to the nearest quarter inch
Please allow for a slight margin of error