ASSEMBLY INSTRUCTION
FRAMELESS TOWER CASE

NOTE : IT IS RECOMMENDED THAT TWO PERSONS TO ASSEMBLE THIS UNIT .

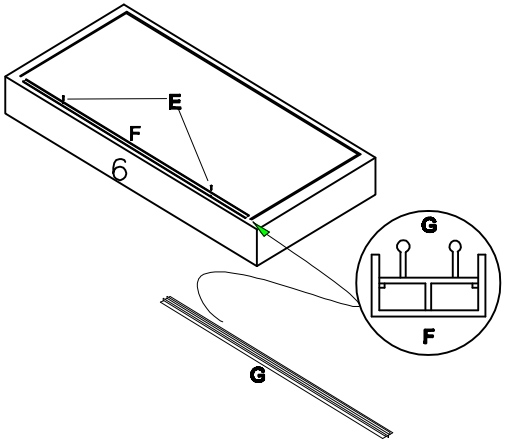

STEP1

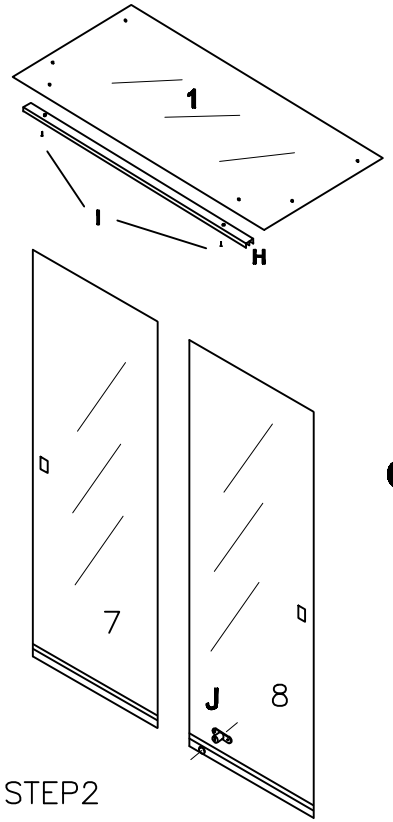

STEP2

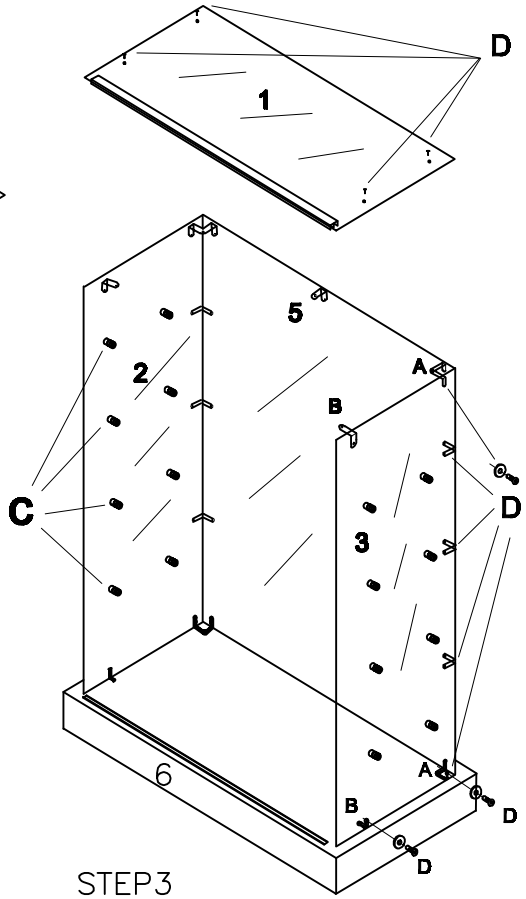

STEP3

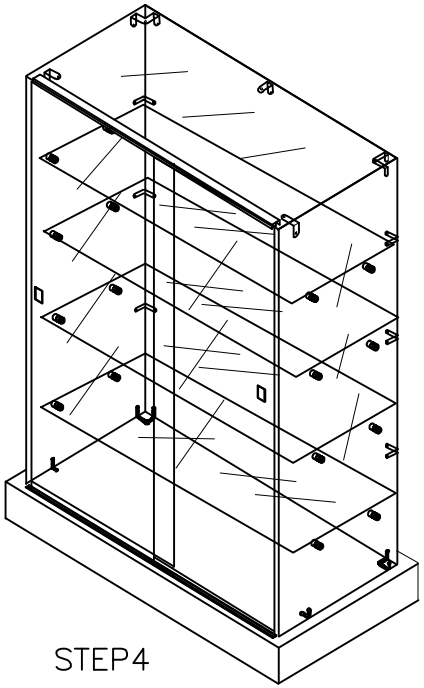

STEP4

PARTS LIST		
NO.	QTY	DESCRIPTION
1	1PC	TOP
2	2PCS	SIDE BOARD
3	4PCS	SHELF
4	1PC	BACK BOARD
5	1SET	WOOD BOTTOM BASE
6	1PC	RIGHT DOOR
7	1PC	LEFT DOOR
REMARK:2020-12-31		

A	B	C	D	E	F	G	H	I	J	K
4PCS	11PCS	16PCS	30PCS	4PCS	1PC	1PC	1PC	1PC	1PC	1PC
										TOOL