NVelup Towel Warmers

Multi-function 21 Bar

ETW15 PS [polished stainless]

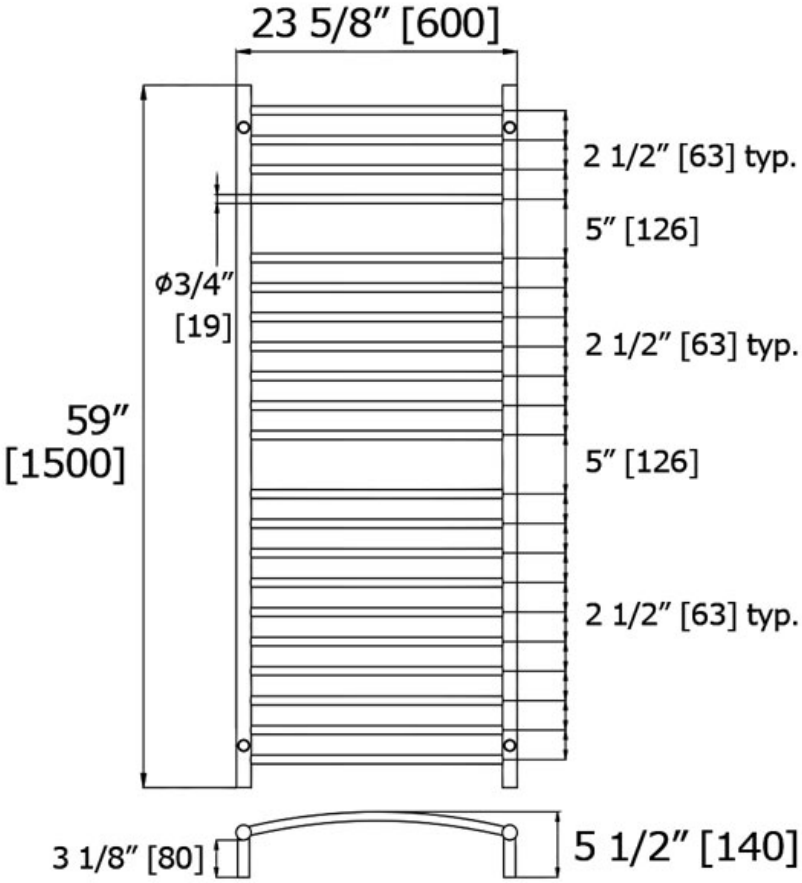

Plug-in or Hardwire

LaLOO Accessories
laloo.ca
866.305.2566
service@laloo.ca