QUICKSILVER MX
THE ORIGINAL

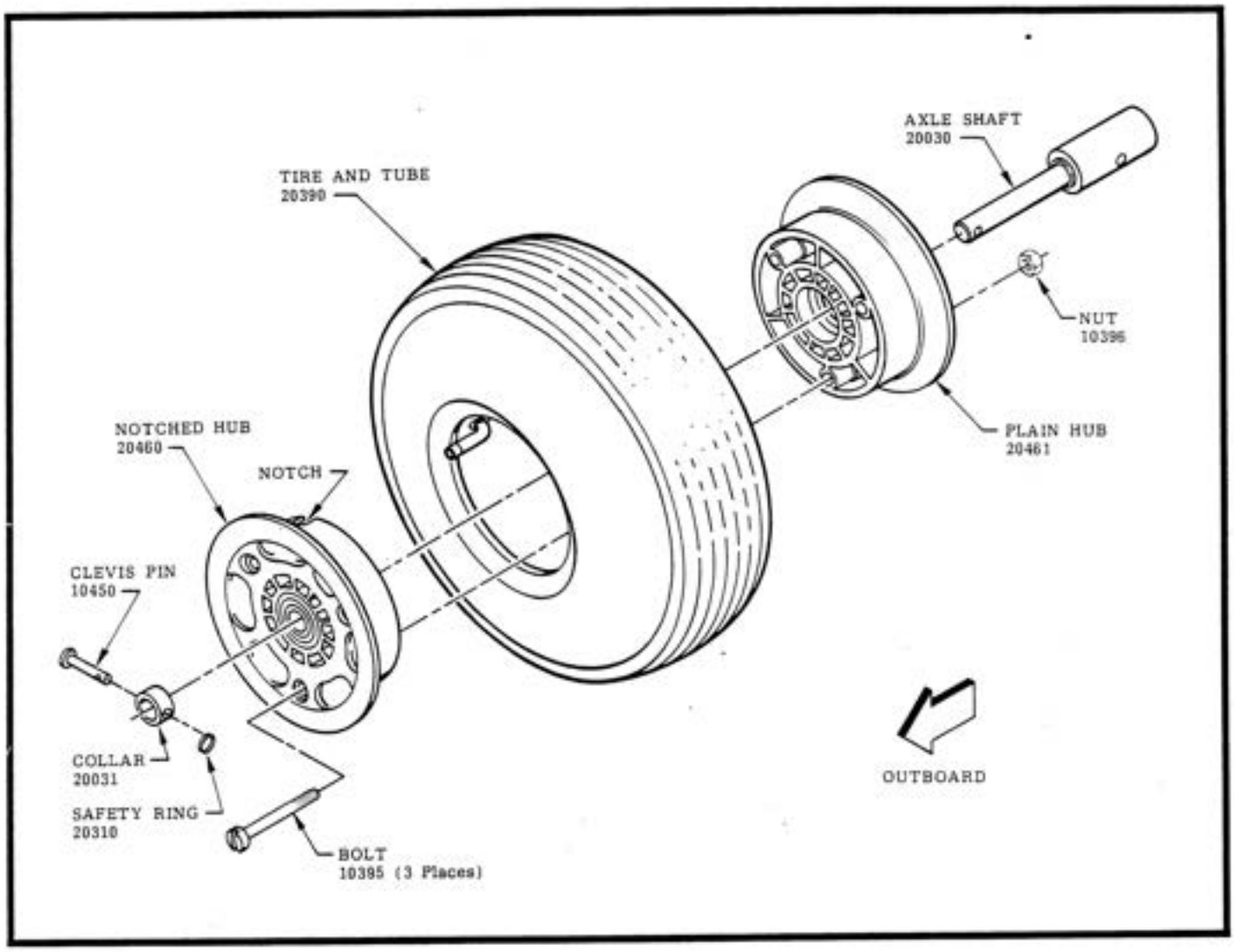

ASSEMBLY AND PARTS MANUAL

MANUAL 50250

QUALITY ASSURANCE ACCEPTED
3/2/83

E.C.O. # 084 REV. A

CONSTRUCTION NOTES

Assembly of your MX-Quicksilver can easily be accomplished in one weekend. You may wish to involve a friend to give you a helping hand on a few of the assembly procedures; such as lifting the tail section into position, alignment, or leveling some items, etc.

All the difficult fabrication details have been pre-finished at the factory including most drilling; anodizing; cable swaging; sewing of wing and the tail surfaces, etc.

Read thru this manual and familiarize yourself with the terminology, the use of assembly drawings and detail breakdown. For "AN" bolt sizes and dimensions, (use the bolt gauge on page 3)

Work slowly and carefully and follow these assembly procedures closely. Do not use substitute materials or initiate design changes. If you have any construction problems or questions do not hesitate to contact your dealer or the factory for assistance.

WHENEVER POSSIBLE, THE ASSEMBLY ILLUSTRATIONS ARE SHOWN IN THE RELATIVE POSITION THAT THE AIRPLANE WILL BE IN WHEN YOU WORK ON IT, SUCH AS NOSE DOWN, WING INVERTED OR UPRIGHT.

Basic Tools Needed

One pair each;
3/8", 7/16", 1/2"
5/8", 11/16" and
10mm open end wrenches

Torque Wrench (optional)

Fine flat, and 1/2 round
or rat tail files

Hacksaw

Electric drill (or hand drill)
with 1/8", 3/16", 1/4" and
5/16" Drill Bits

Pop Rivet Gun

Sharp knife

Hammer

Tape measure and
Marking pencil

Scissors

Allen Wrenches
1/8", and 6mm

Sail makers hot knife or
a soldering iron with a
blade edge

"C" Clamps

Lubricant (3 in 1 oil or equiv.)

TORQUE VALUES

3/16"	(AN 3)------10-20	inch/lbs
1/4"	(AN 4)------30-50	inch/lbs
5/16"	(AN 5)------60-80	inch/lbs

Self-locking nuts can be torqued to the standard values, with the exception of bolts that pass through tubes with no solid internal support. In this case tighten the bolt until the tube shows a slight distortion. Back off the nut 1/8 turn maximum. Be particularly careful when installing the bolt (coarse thread) in the main wing spars.

Where wing nuts are used, be sure to lock with safety "rings". Cotter keys or safety pins are not recommended.

After installing bolts, check that the "grip length" is correct. Use the correct number of washers as shown in the assembly drawings. At least one bolt thread should extend out of the nut. One or two washers may be used to prevent the bolt from bottoming out before producing a tight fit. (make sure you have used the proper bolt length). Eye bolts and fork bolts do not require a washer under the head. except where indicated.

Self-locking nuts should <u>not</u> be removed and reinstalled more than once. Generally they become less vibration resistant with each removal.

THE GAUGE BELOW WILL HELP YOU DETERMINE THE DIAMETER AND THE LENGTH OF THE "AN" BOLTS

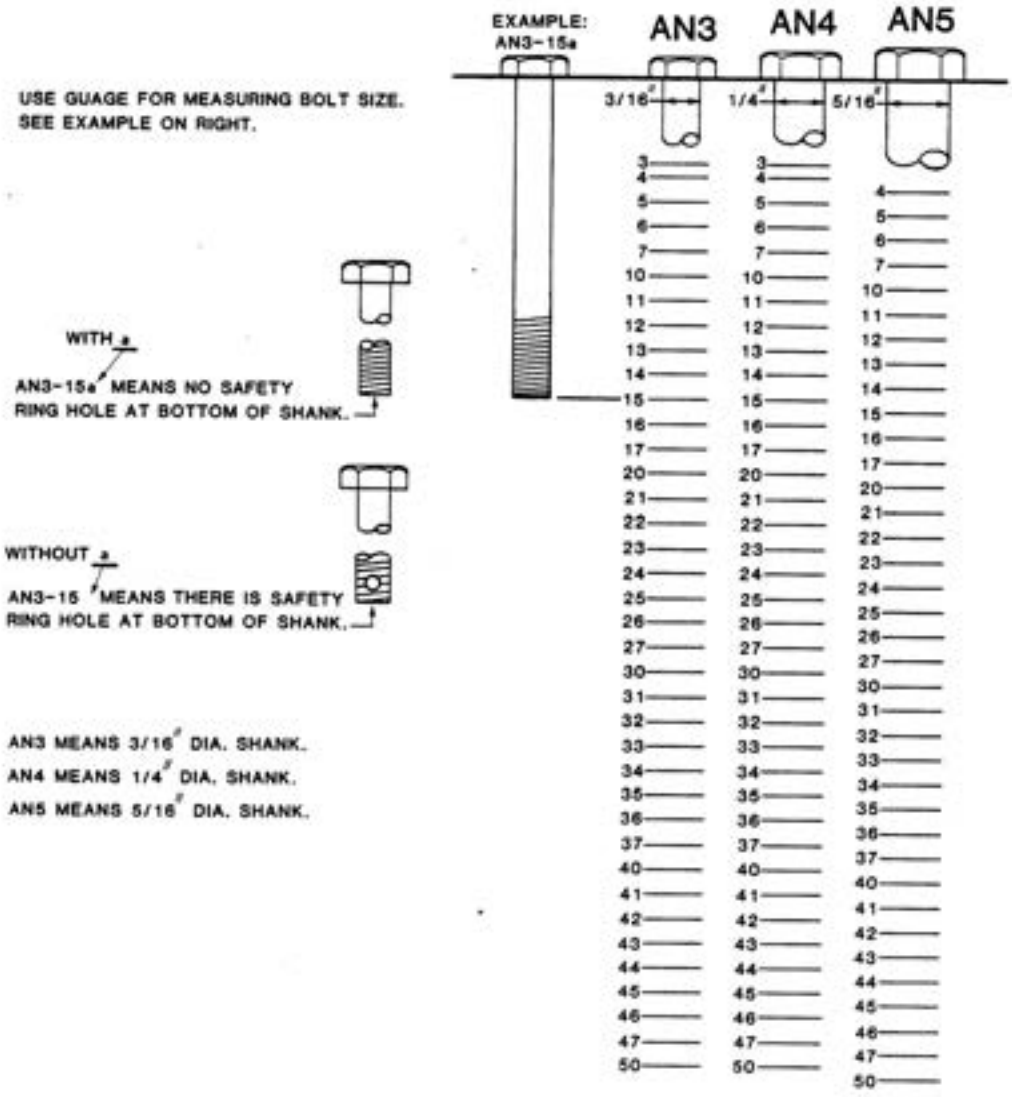

NOTICE:

The "AN" Bolts are used through-out the construction of the airplane for structural integrity.

Do not use substitutes. See your dealer for replacements if necessary.

SECTION ONE

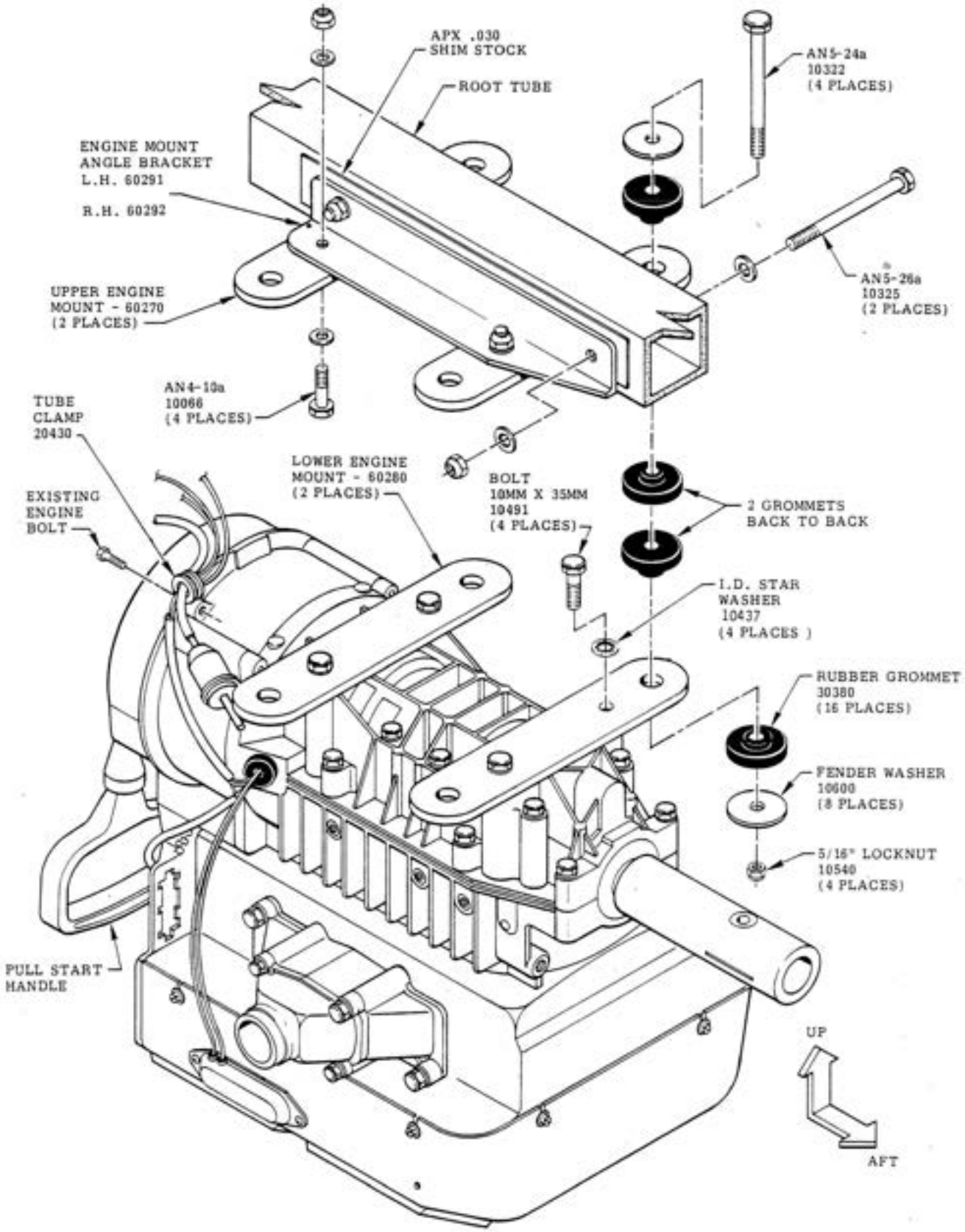

BEFORE STARTING THIS ENGINE MOUNT BUILD-UP, STUDY THE ILLUSTRATIONS AND THE INSTRUCTIONS ON THIS AND THE FOLLOWING PAGE.

INSTALL A 1" TUBE CLAMP 20430 AS SHOWN TO KEEP THE WIRING AND FUEL LINE AWAY FROM THE PULL START HANDLE. NOTE: THE ATTACH HOLE IN THE TUBE CLAMP WILL HAVE TO BE INLARGED WITH A RAT TAIL FILE TO ACCEPT THE EXISTING ENGINE BOLT.

SECTION ONE

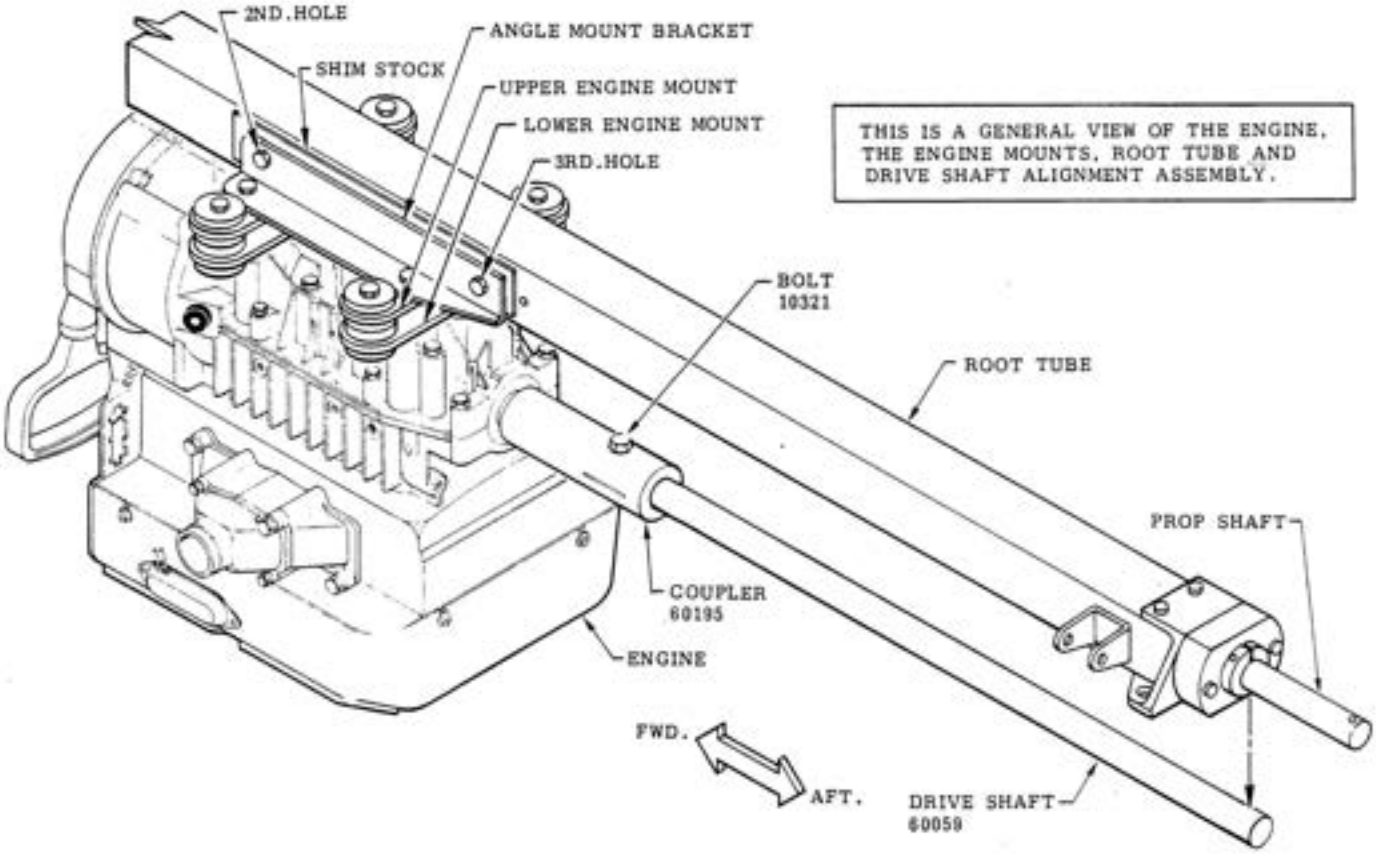

AT THIS STAGE YOUR CONCERN WILL BE TO BUILD UP THE ENGINE WITH ITS MOUNTING HARDWARE AND THE ALIGNMENT OF THE DRIVE SHAFT WITH RELATION TO THE ROOT TUBE AND PROP SHAFT. WHEN FINISHED IT WILL BE SET ASIDE TO BE INSTALLED ON THE PLANE AT A LATER TIME.

TO MAKE THE INSTALLATION OR REMOVAL OF THIS ASSEMBLY TO THE ROOT TUBE EASIER WITHOUT FORCING OR BINDING WHEN INSTALLED LATER. FOLLOW THE PROCEDURES LISTED BELOW ALONG WITH THE ILLUSTRATIONS ON THIS AND THE PROCEEDING PAGE.

1. THE ENGINE IS SECURED IN THE PACKING CRATE WITH 4 STUDS. REMOVE AND DISCARD THESE STUDS.

2. START THE ASSEMLBY WITH THE TWO ANGLE MOUNT BRACKETS. USE THE 2ND AND 3RD "SIDE" HOLES FROM THE FRONT ON THE ROOT TUBE AND PROCEED AS FOLLOWS:

   (a) PLACE ABOUT 6 SHEETS OF PAPER OR THIN CARDBOARD (APPROXIMATELY .030) BETWEEN THE ROOT TUBE AND THE ANGLE BRACKET (ONE SIDE ONLY). SECURE THE TWO BRACKETS TIGHTLY ON THE ROOT TUBE WITH ATTACH BOLTS 10328. NOTE: BE SURE YOU HAVE THE RIGHT AND LEFT HAND BRACKETS FACING FORWARD AND AFT. CORRECTLY.

3. ATTACH THE TWO "UPPER" ENGINE MOUNTS (60083) TO THE ANGLE BRACKETS BUT DO NOT TIGHTEN.

4. ATTACH THE TWO "LOWER" ENGINE MOUNTS (60082) TO THE ENGINE AS SHOWN BUT DO NOT TIGHTEN.

5. NOW TIE THE UPPER AND LOWER ENGINE MOUNTS TOGETHER (4 PLACES) AS ILLUSTRATED WITH THE GROMMETS, FENDER, WASHERS, ETC., BUT DO NOT TIGHTEN AT THIS TIME.

6. INSTALL THE DRIVE SHAFT 60059 IN THE DRIVE SHAFT COUPLER 60195 (MAKE SURE YOU HAVE THE CORRECT END OF THE DRIVE SHAFT WITH THE ATTACH HOLE THAT IS 3/4" FROM THE END OF THE SHAFT) SECURE TIGHTLY IN PLACE WITH BOLT 10321 AND NUT.

7. WITH THE TOTAL ASSEMBLY LOOSELY TIED TOGETHER, CENTER THE DRIVE SHAFT DIRECTLY UNDER THE PROP SHAFT AND TIGHTEN UP ALL ATTACH BOLTS ON THE TOTAL ASSEMBLY.
   NOTE: THE RUBBER GROMMETS SHOULD BE SLIGHTLY COMPRESSED. THIS IS NORMALLY DONE WITH 1-1/2 THREADS SHOWING BELOW THE LOCKNUT ON ATTACH BOLT 10322.

8. NOW RECHECK THE DRIVE SHAFT ALIGNMENT AND IF IT IS OK REMOVE THE ROOT TUBE AND DISCARD THE SHIM STOCK. SET THE ASSEMBLY ASIDE. IT WILL BE INSTALLED ON THE PLANE LATER.

THE PROP END OF THE ROOT TUBE ASSEMBLY, CONSISTING OF THE PROP SHAFT, BEARING HOUSING AND CHANNELS IS ASSEMBLED AND ALIGNED AT THE FACTORY.

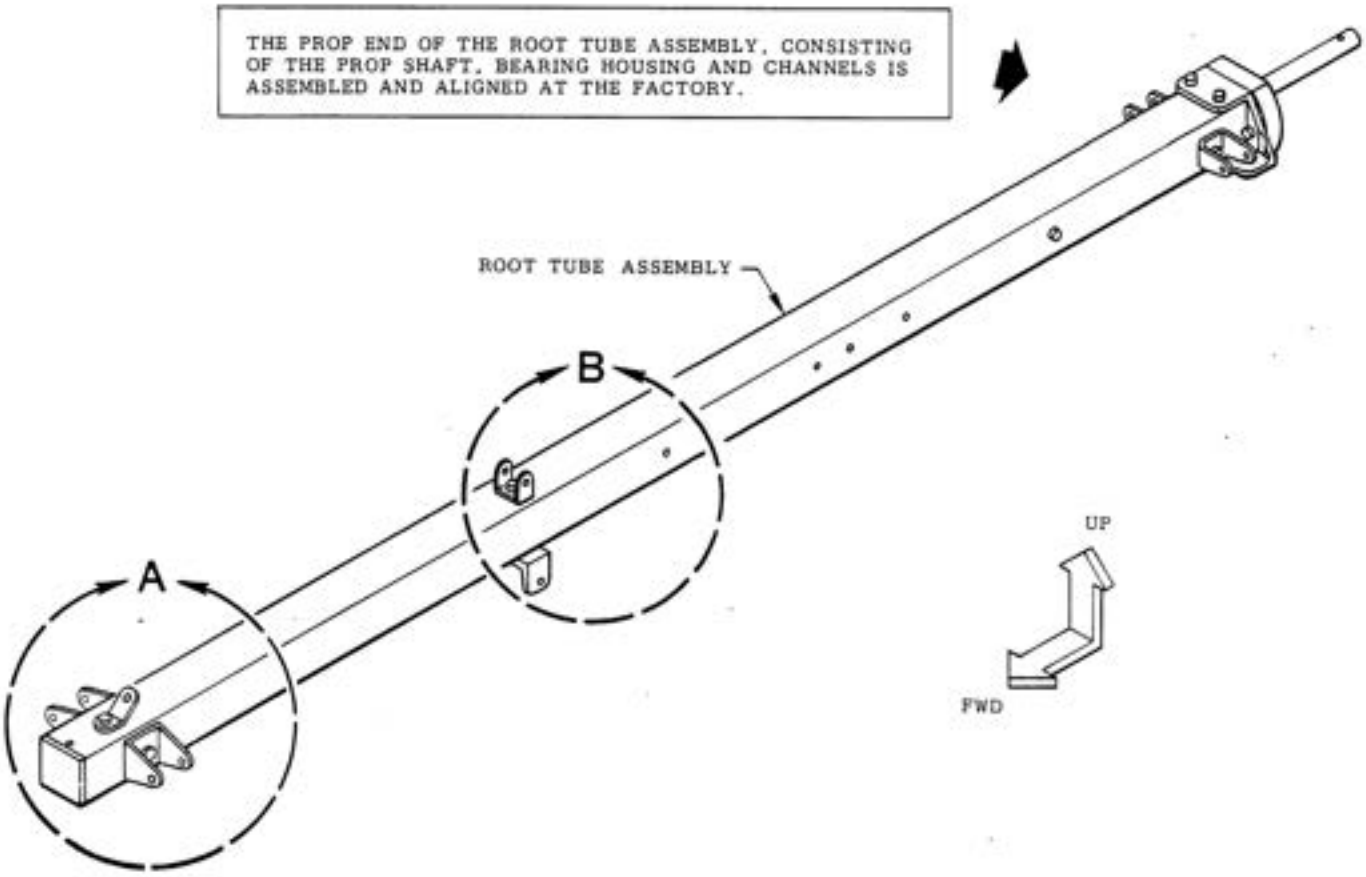

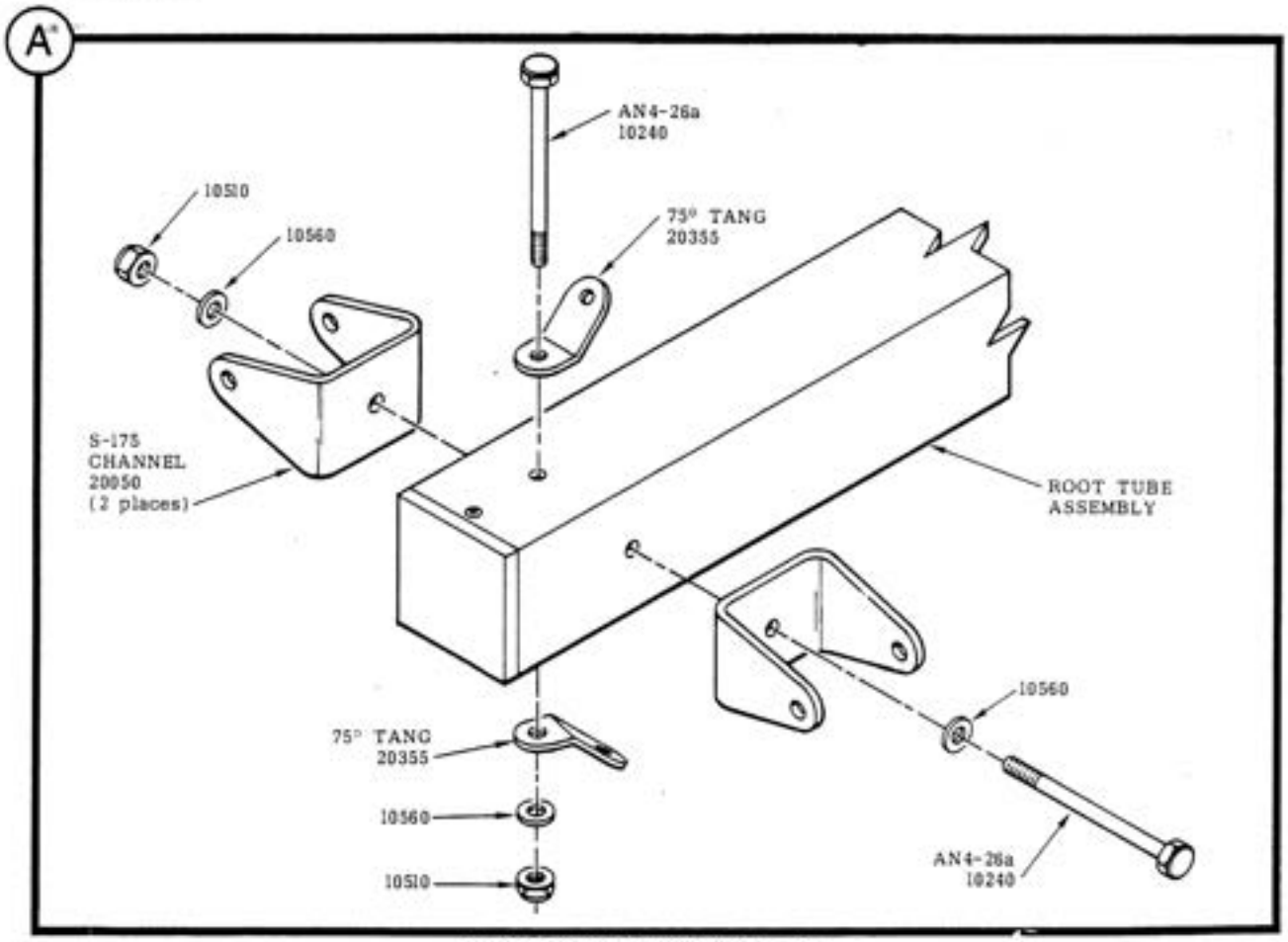

DETAILS CONTINUED NEXT PAGE

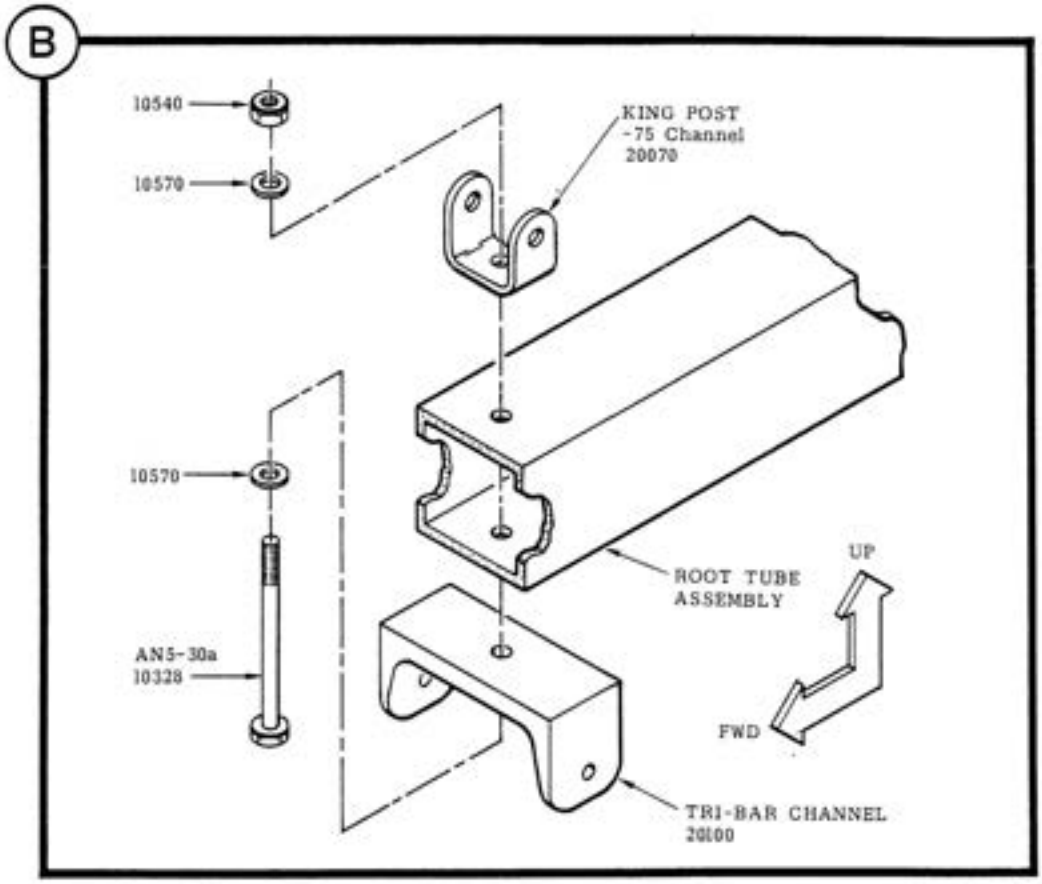
B
10540
10570
KING POST
-75 Channel
20070
10570
ROOT TUBE
ASSEMBLY
UP
AN5-30a
10328
FWD
TRI-BAR CHANNEL
20100

SECTION ONE

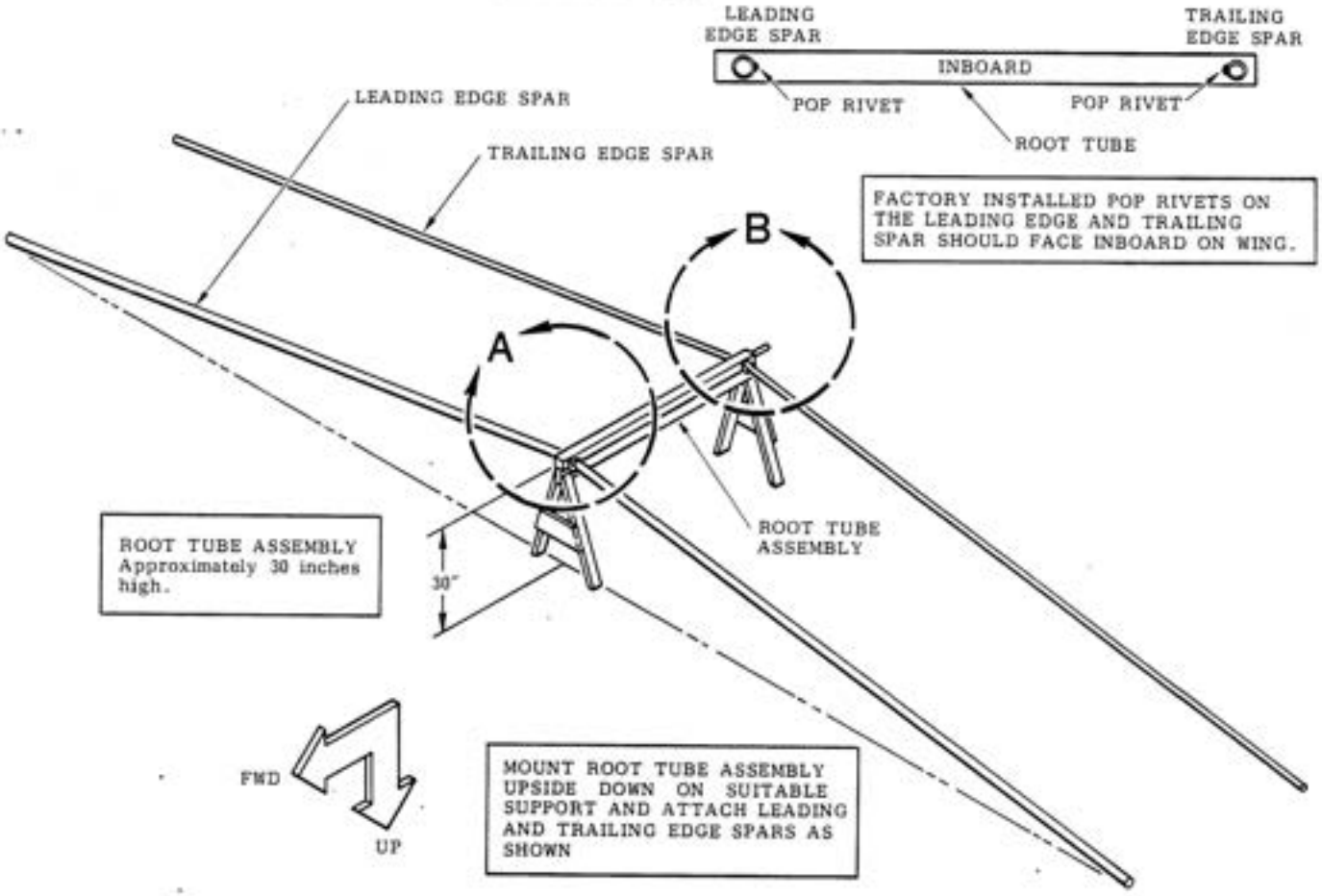

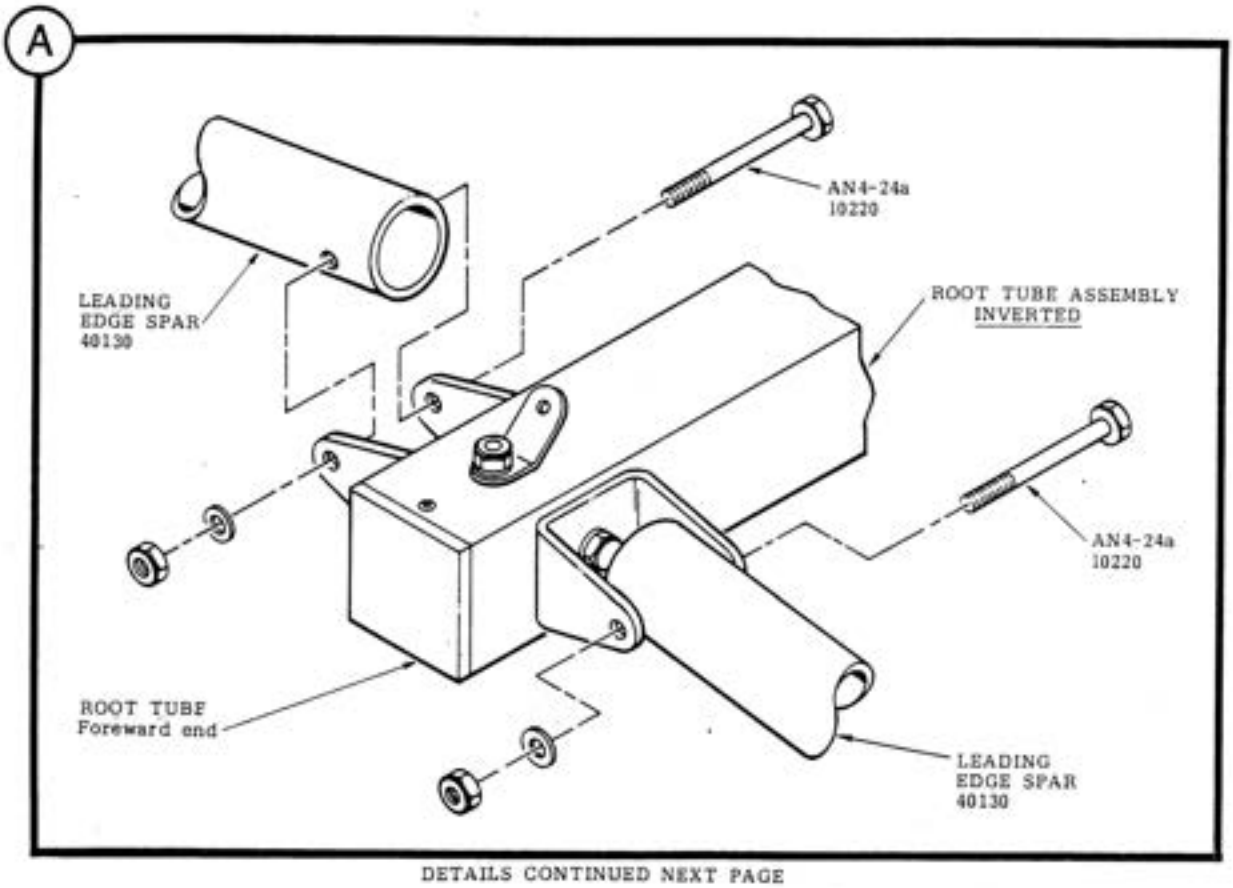

DETAILS CONTINUED NEXT PAGE

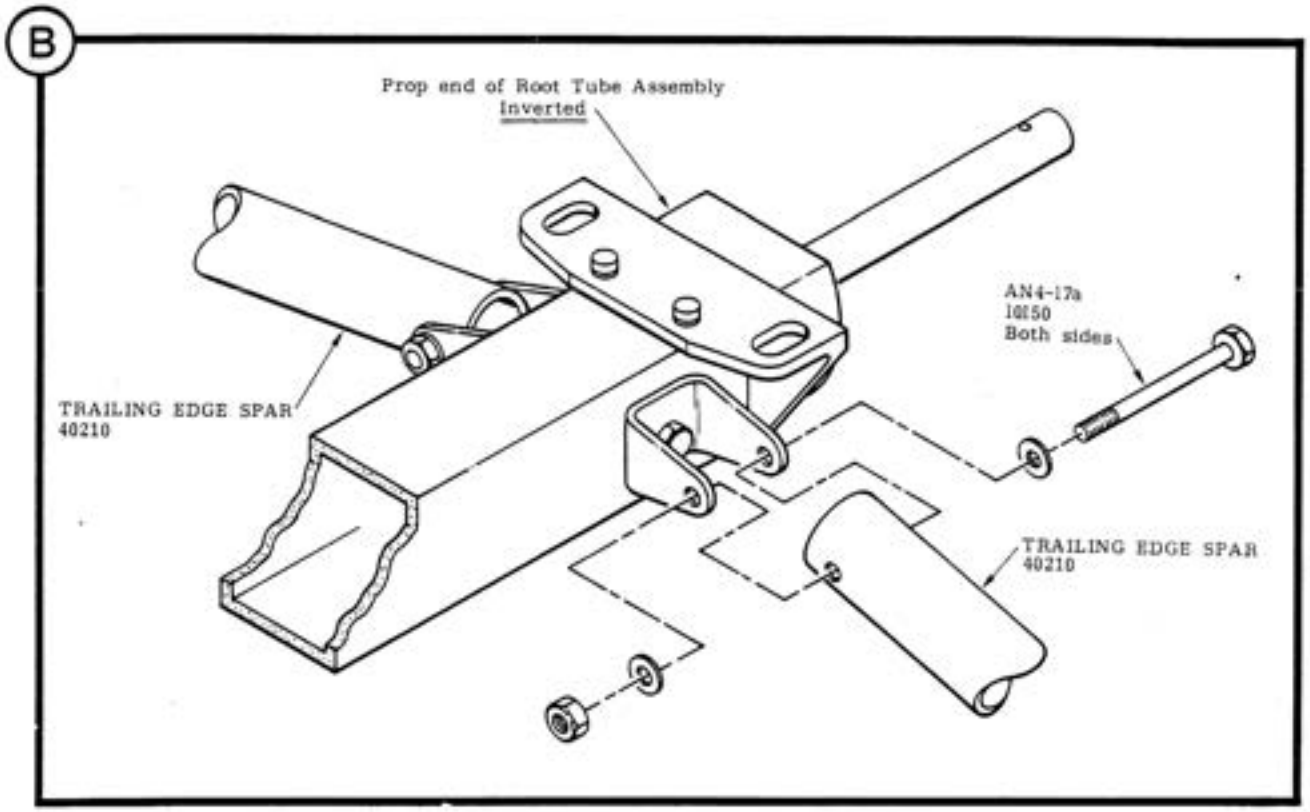
B
Prop end of Root Tube Assembly
Inverted
AN4-17a
10150
Both sides
TRAILING EDGE SPAR
40210
TRAILING EDGE SPAR
40210

SECTION TWO

PULL OUTWARD

TRAILING EDGE

LEADING EDGE

ROOT TUBE

2 CENTER RIBS 40160

A

VELCRO STRIP

OUTBOARD GROMMETS: Two each sail

CENTER RIB POCKET

INBOARD GROMMETS: ONE IN LEADING EDGE OF EACH SAIL AND ONE IN TRAILING EDGE OF EACH SAIL.

A

CHANNEL FITTINGS

VELCRO STRIP

SAIL END

L.E. SPAR

DOWN

ROOT TUBE

SAIL

SAIL ENDS FLUSH WITH CHANNEL FITTINGS

FWD

INBOARD SAIL GROMMETS

PARALLEL

spar

OUTBOARD

CORRECT

INBOARD

NOT PARALLEL

spar

INCORRECT

1. WITH ROOT TUBE AND SPAR ASSEMBLY INVERTED AND SUPPORTED AS SHOWN, SLIDE SAILS OVER SPARS AND ATTACH VELCRO STRIP.

2. INSERT THE 2 CENTER RIBS IN RIB POCKETS. (ONE RIB IN EACH SAIL).

3. PULL INBOARD SAIL ENDS (4 PLACES) UP FLUSH WITH CHANNEL FITTINGS ON ROOT TUBE. (2 CHANNEL FITTINGS ON LEADING EDGE SPARS AND 2 CHANNEL FITTINGS ON TRAILING EDGE SPARS.

4. USING THE FACTORY INSTALLED SAIL GROMMETS, AS LOCATORS, DRILL FOUR 3/16" (4.8 mm) HOLES THRU GROMMET HOLES INTO THE INBOARD ENDS OF THE LEADING AND TRAILING EDGE SPARS. POP RIVET SAILS IN PLACE.

5. WITH THE FOUR INBOARD RIVETS SECURED (2 EACH SAIL) PULL SAIL ENDS OUTWARD APPROXIMATELY 30-40 LBS (13.63-18.8 kg) AND MARK OUTBOARD GROMMET LOCATION. (USE PENCIL OR SHARP POINTED SCRIBER THRU GROMMET HOLES) SLIDE BACK SAILS AND DRILL 3/16" (4.8 mm) HOLES IN SPARS WHERE INDICATED: NOTE: MAKE SURE THE INBOARD AND OUTBOARD GROMMET HOLES ALIGN PARALLEL ON SPARS (SEE DIAGRAM) POP RIVET SAILS INTO PLACE.

SECTION THREE

STUDY THIS GENERAL WING ARRANGEMENT, THEN START ASSEMBLY WITH DETAIL "A". REMEMBER THE WING IS UPSIDE DOWN. DO NOT CONFUSE THE COMPRESSION STRUT "HOLES" WITH THE COMPRESSION STRUT "BOLT HOLES".

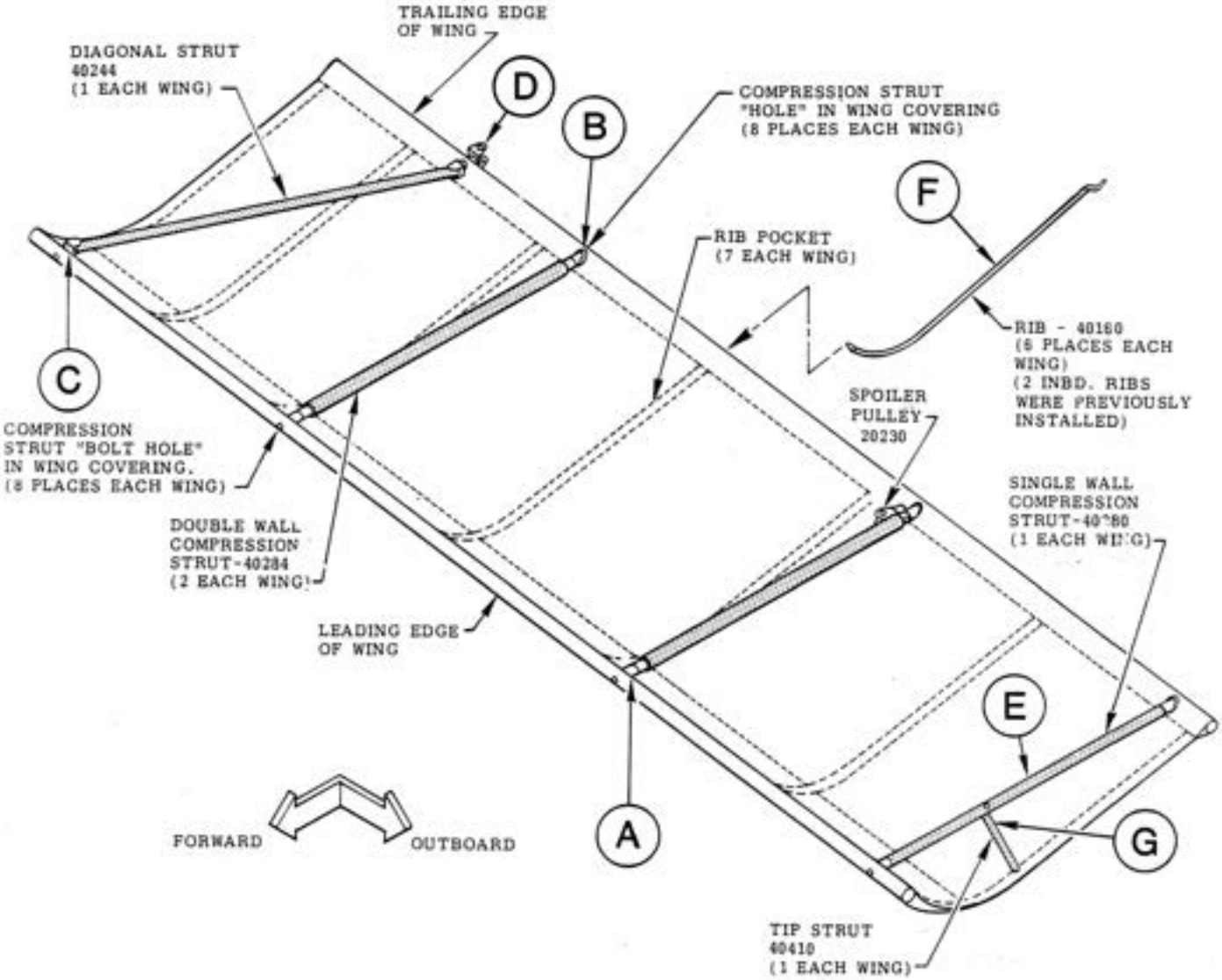

YOUR AREA OF CONCERN WITH THIS SECTION IS AS FOLLOWS:

1. ASSEMBLY OF THE COMPRESSION STRUTS. NOTE THE DIFFERENCE BETWEEN THE DOUBLE WALLED STRUTS AND THE SINGLE WALL OUTBOARD STRUT.
2. ATTACHMENT OF THE SPOILER PULLEY.
3. INSTALLATION OF RIBS.
4. CUTTING AND HEAT SEALING OF THE STRUT "HOLES" IN THE WING MATERIAL.
5. INSTALLATION OF THE STRUTS (DIAGONAL AND COMPRESSION)
6. INSTALLATION OF THE TIP STRUT
7. CUTTING AND HEAT SEALING OF THE STRUT "BOLT HOLES"

DETAILS CONTINUED NEXT PAGE

A

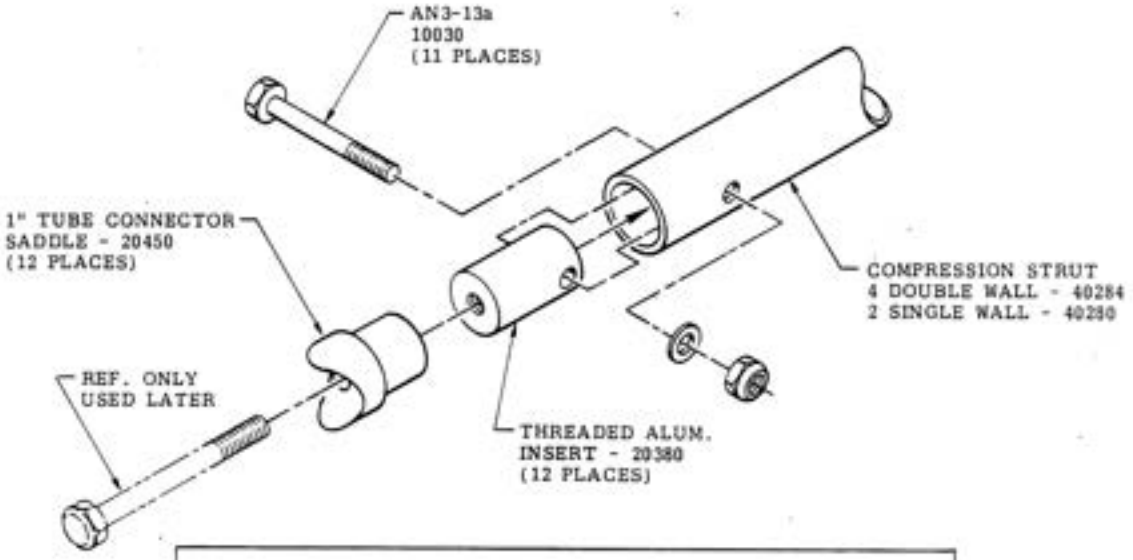

1. ASSEMBLE 6 COMPRESSION STRUTS AS SHOWN (3 EACH WING) AND SET ASIDE FOR LATER INSTALLATION.

NOTE:
BOTH ENDS OF THE STRUTS HAVE THE SAME FITTINGS EXCEPT FOR ONE BOLT (AN3-17a) WHICH IS LONGER AND IS USED TO ATTACH THE PULLEY 20230 AS SHOWN BELOW.

2. ATTACH THE PULLEY 20230 TO THE END OF ONE OF THE DOUBLE WALLED COMPRESSION STRUTS AS ILLUSTRATED.

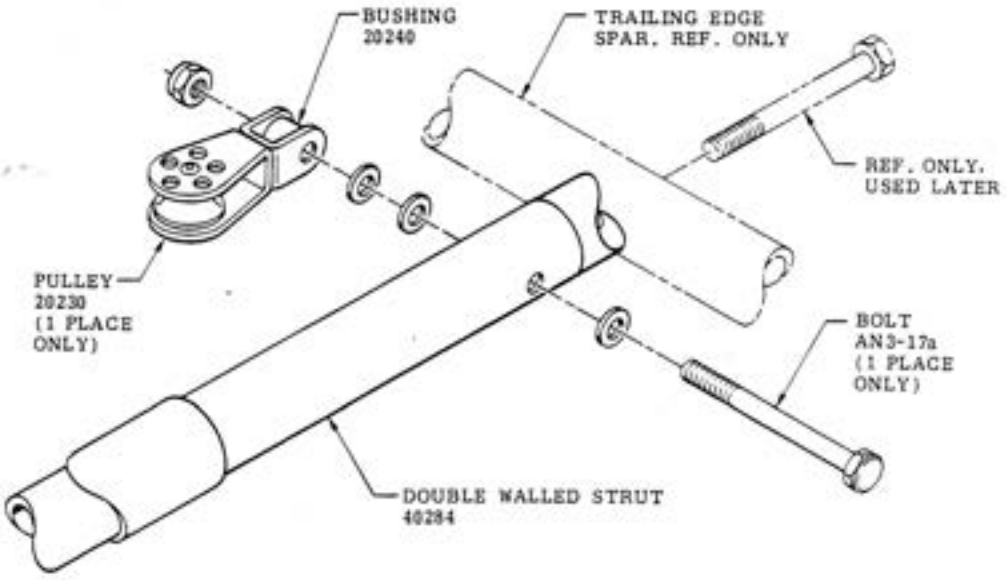

DETAILS CONTINUED

B

USE THE TEMPLATE PATTERN ON THE NEXT PAGE, DETAIL (B-CONTINUED), TO LOCATE THE HOLES IN THE WING COVER FOR THE DIAGONAL AND COMPRESSION STRUTS.

1. LOCATE THE "HIDDEN" FACTORY PREDRILLED BOLT HOLES IN SPAR BY RUNNING FINGER OVER SPAR AS SHOWN.

2. MARK THE CENTER OF THE "HIDDEN" BOLT HOLE AND SCRIB A LINE AT RIGHT ANGLE TO SPAR WITH A PENCIL. SEE VIEW "A-A" BELOW

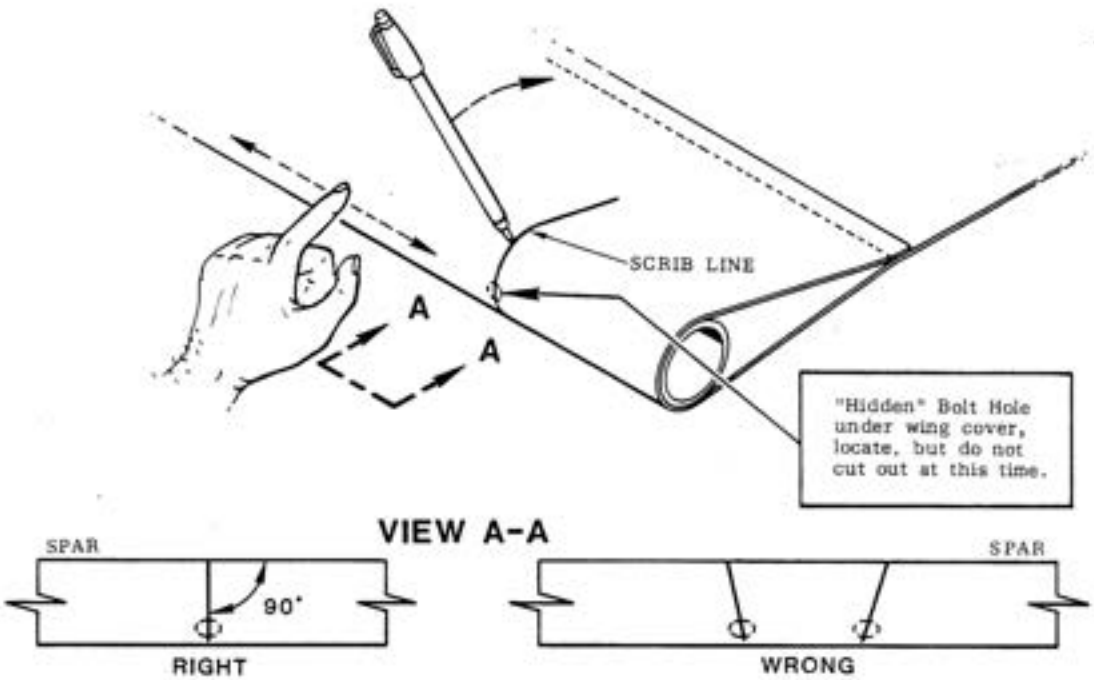

3. CENTER THE LOCATER HOLE IN THE TEMPLATE OVER THE SCRIBED LINE. MOVE THE TEMPLATE FORWARD OR AFT AS INDICATED BELOW AND MARK LOCATION ON THE WING COVER THRU HOLE IN THE TEMPLATE WITH A PENCIL. NOTICE THAT THE USE OF THE TEMPLATE IS DIFFERENT ON THE LEADING EDGE SPAR AND THE TRAILING EDGE SPAR. REPEAT AT 8 PLACES ON EACH WING.

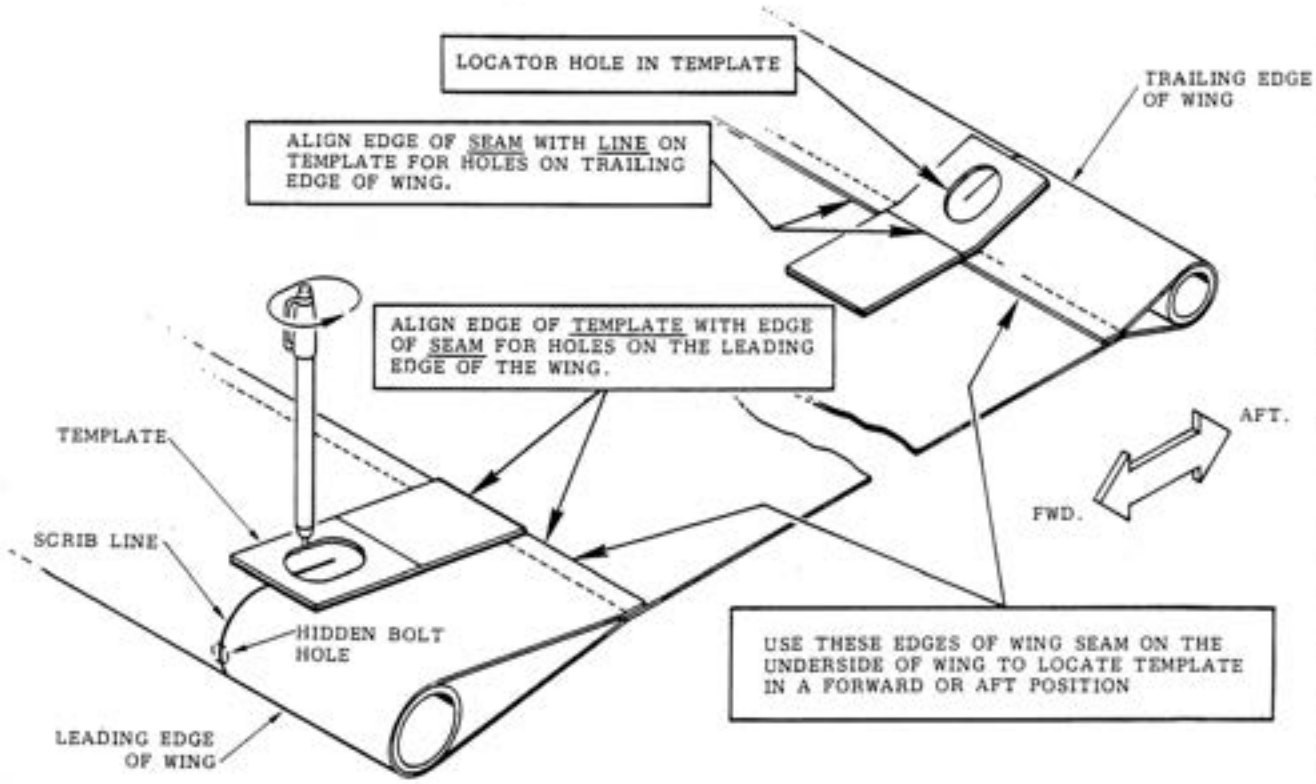

DETAILS CONTINUED NEXT PAGE

B

CONTINUED

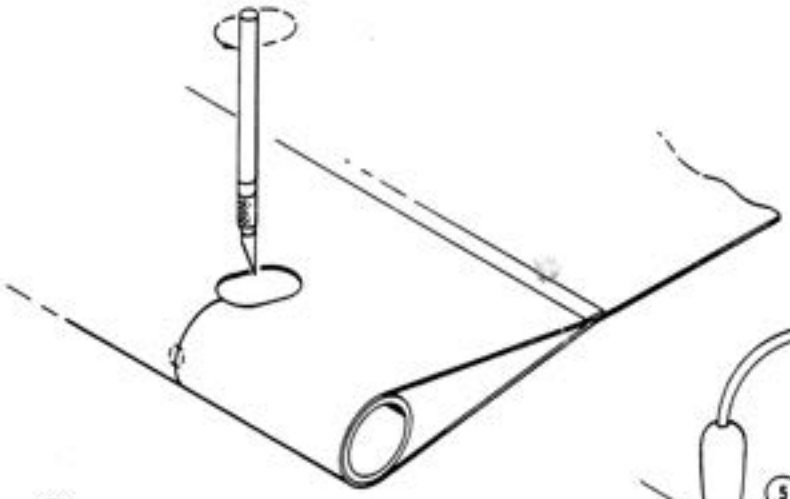

4 CUT OUT HOLE IN WING COVER

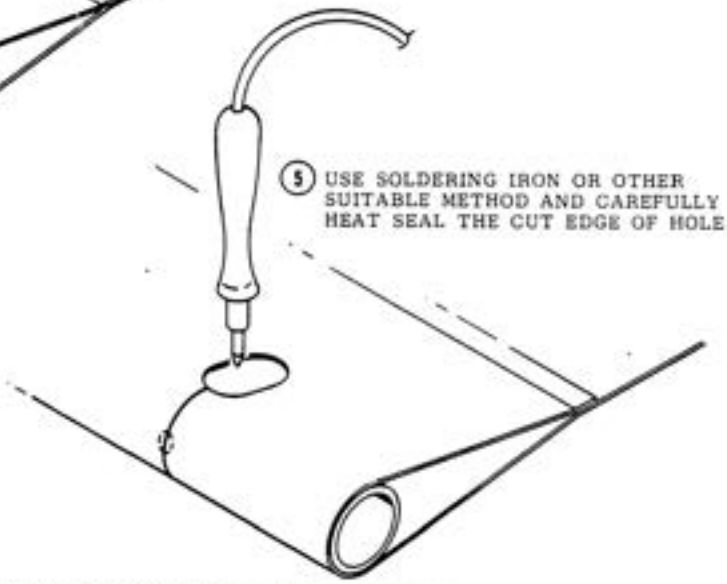

5 USE SOLDERING IRON OR OTHER SUITABLE METHOD AND CAREFULLY HEAT SEAL THE CUT EDGE OF HOLE.

REPEAT THE ABOVE OPERATIONS 8 PLACES ON EACH WING

TRACE THIS TEMPLATE ON HARD THIN CARDBOARD AND CUT OUT

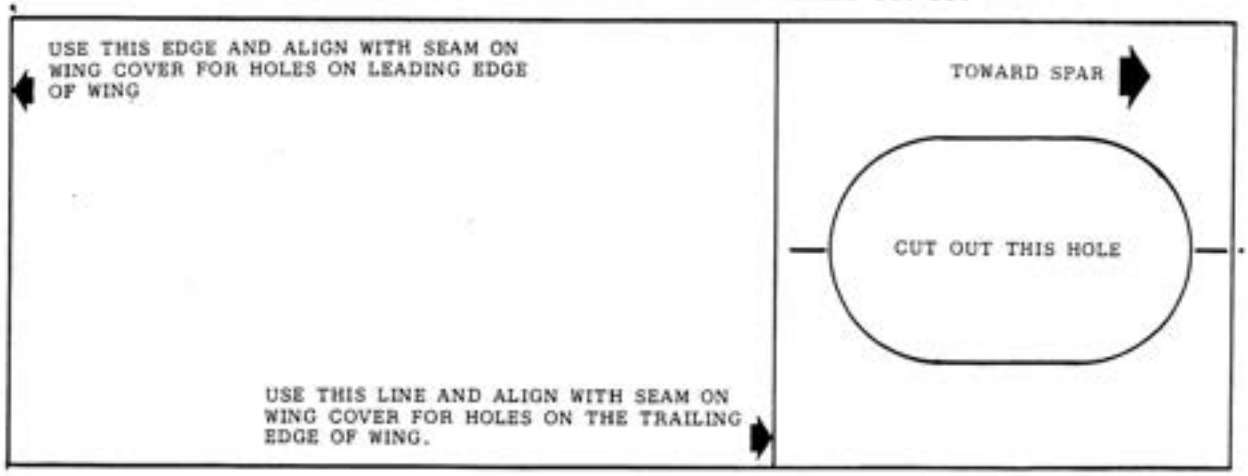

DETAILS CONTINUED NEXT PAGE

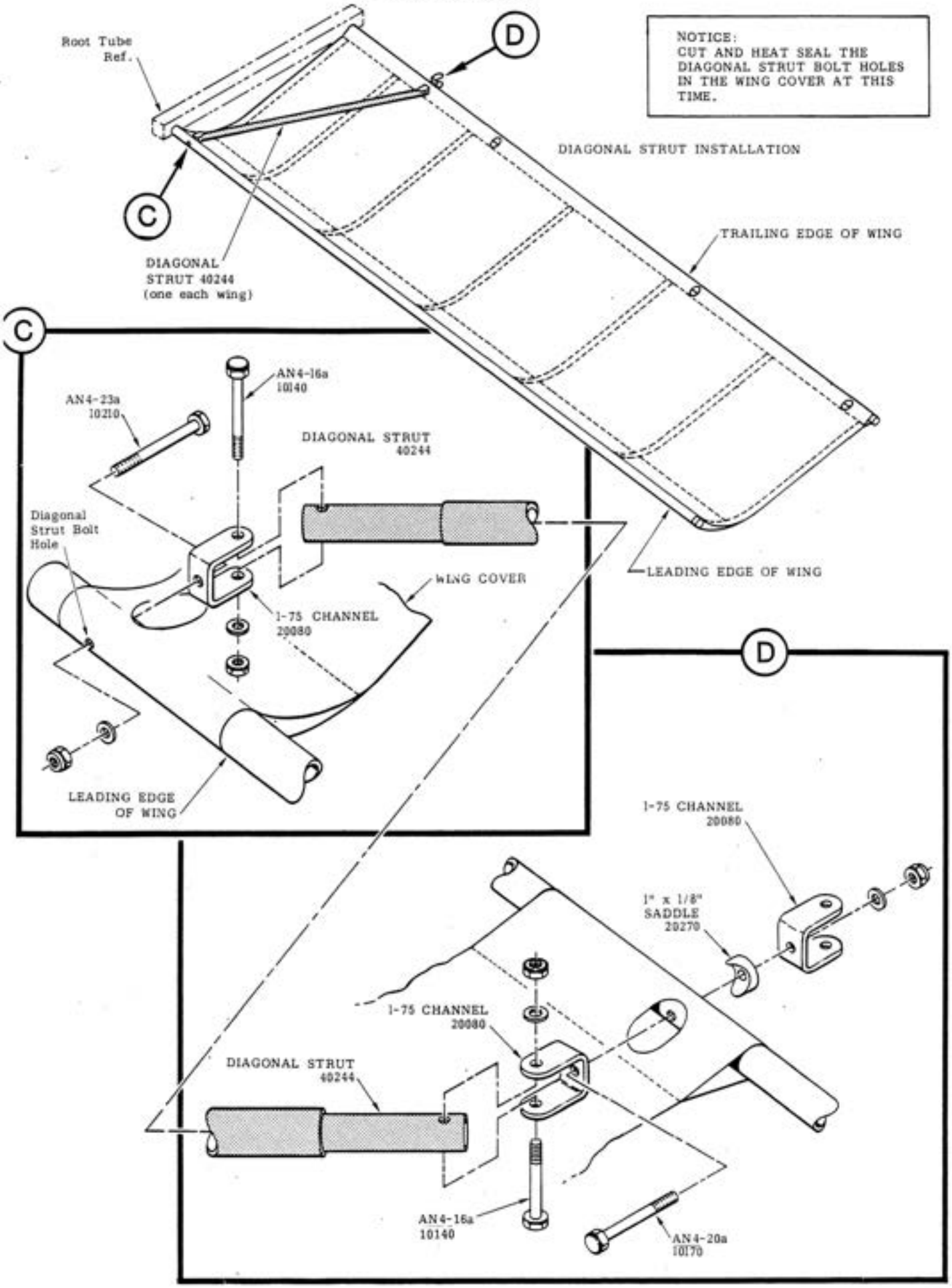
NOTICE:
CUT AND HEAT SEAL THE DIAGONAL STRUT BOLT HOLES IN THE WING COVER AT THIS TIME.
DIAGONAL STRUT INSTALLATION
Root Tube Ref.
D
C
DIAGONAL STRUT 40244 (one each wing)
TRAILING EDGE OF WING
LEADING EDGE OF WING
AN4-16a 10140
AN4-23a 10210
DIAGONAL STRUT 40244
Diagonal Strut Bolt Hole
WING COVER
1-75 CHANNEL 20080
LEADING EDGE OF WING
1-75 CHANNEL 20080
1" x 1/8" SADDLE 20270
1-75 CHANNEL 20080
DIAGONAL STRUT 40244
AN4-16a 10140
AN4-20a 10170

SECTION THREE

RIB (40160)
INSERT IN POCKET
ON THE TOP SIDE OF
WING (6 PLACES EACH
WING)

F

E

EADING EDGE
OF WING

COMPRESSION
STRUT – 40284
(2 EACH WING)

COMPRESSSION STRUT
40280
(1 places each wing)

NOTICE:

DO NOT CUT THE COMPRESSION
STRUT BOLT HOLES IN THE WING
COVER AT THIS TIME

TRAILING EDGE
OF WING

E

COMPRESSION
STRUT

POP THE COMPRESSION STRUTS
INTO PLACE. (3 PLACES, EACH WING)

F

NOTICE: THIS VIEW IS INVERTED FROM THE ABOVE VIEW AND SHOWS THE
TOP SURFACE OF WING

FACTORY CUT SLOT
IN RIB POCKET

INSERT RIBS (6 PLACES) ON THE TOP SIDE
OF WING AS SHOWN, WITH THE RIB TIP
RESTING ON TOP OF THE TRAILING EDGE
SPAR. IF THE RIB HANGS UP ON THE
LEADING EDGE SPAR MANEUVER IT INTO
POSITION AND PUSH INTO PLACE.

RIB TIP

TRAILING EDGE
OF WING

G

1. CUT COMPRESSION STRUT BOLT HOLES IN THE WING COVER FOR THE OUTBOARD STRUT ONLY.
2. SECURE OUTBOARD STRUT WITH BOLTS AND WASHERS AS SHOWN.
3. DRILL A 3/16" HOLE IN THE OUTBOARD COMPRESSION STRUT, 11-1/2" FROM THE FWD END AND 1/4" OFF VERTICAL AS SHOWN IN VIEW. "A-A" AND DETAIL BELOW.
4. ATTACH TIP STRUT TO OUTBOARD COMPRESSION STRUT.
5. THE TIP STRUT HAS EXCESSIVE LENGTH. TO DETERMINE THE PROPER LENGTH, PULL THE OUTBD RIB OUT TAUT AS SHOWN AND MARK.
6. CUT OFF EXCESSIVE LENGTH AND USE A RAT TAIL FILE TO FORM A "FISH MOUTH" ON THE END OF THE TIP STRUT. NOTE: FILE IN THE SAME PLANE AS THE FLAT ON THE OTHER END OF THE TIP STRUT.
7. REINSTALL THE TIP STRUT ON THE COMPRESSION STRUT AND SADDLE THE "FISH MOUTH" ON THE OUTBOARD RIB AT A 90° ANGLE TO THE OUTBD. COMPRESSION STRUT AS SHOWN BELOW. (TENSION WILL HOLE IN PLACE)
8. CUT AND SEAL AND ATTACH REMAINING STRUTS.

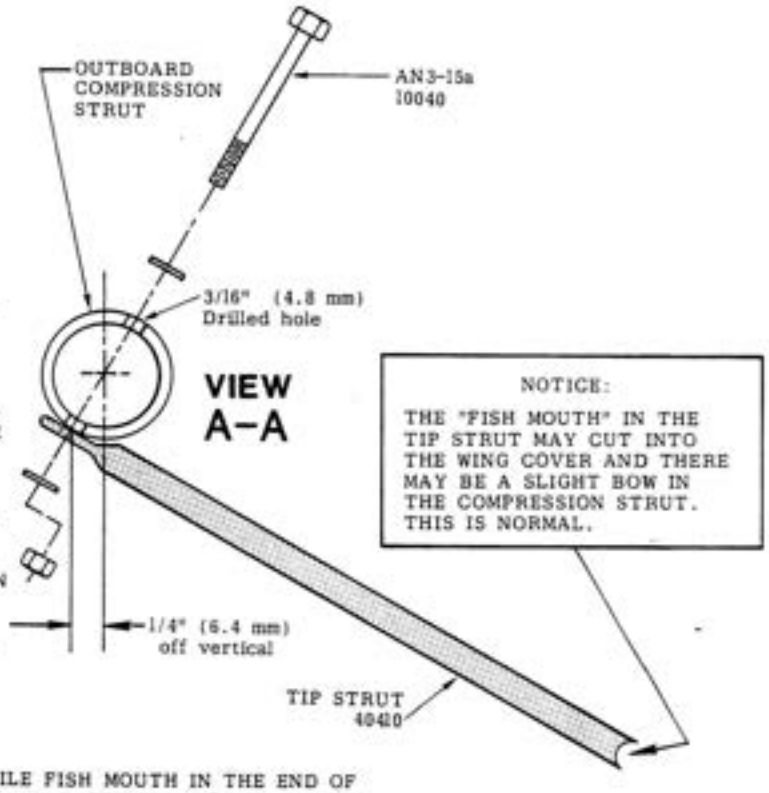

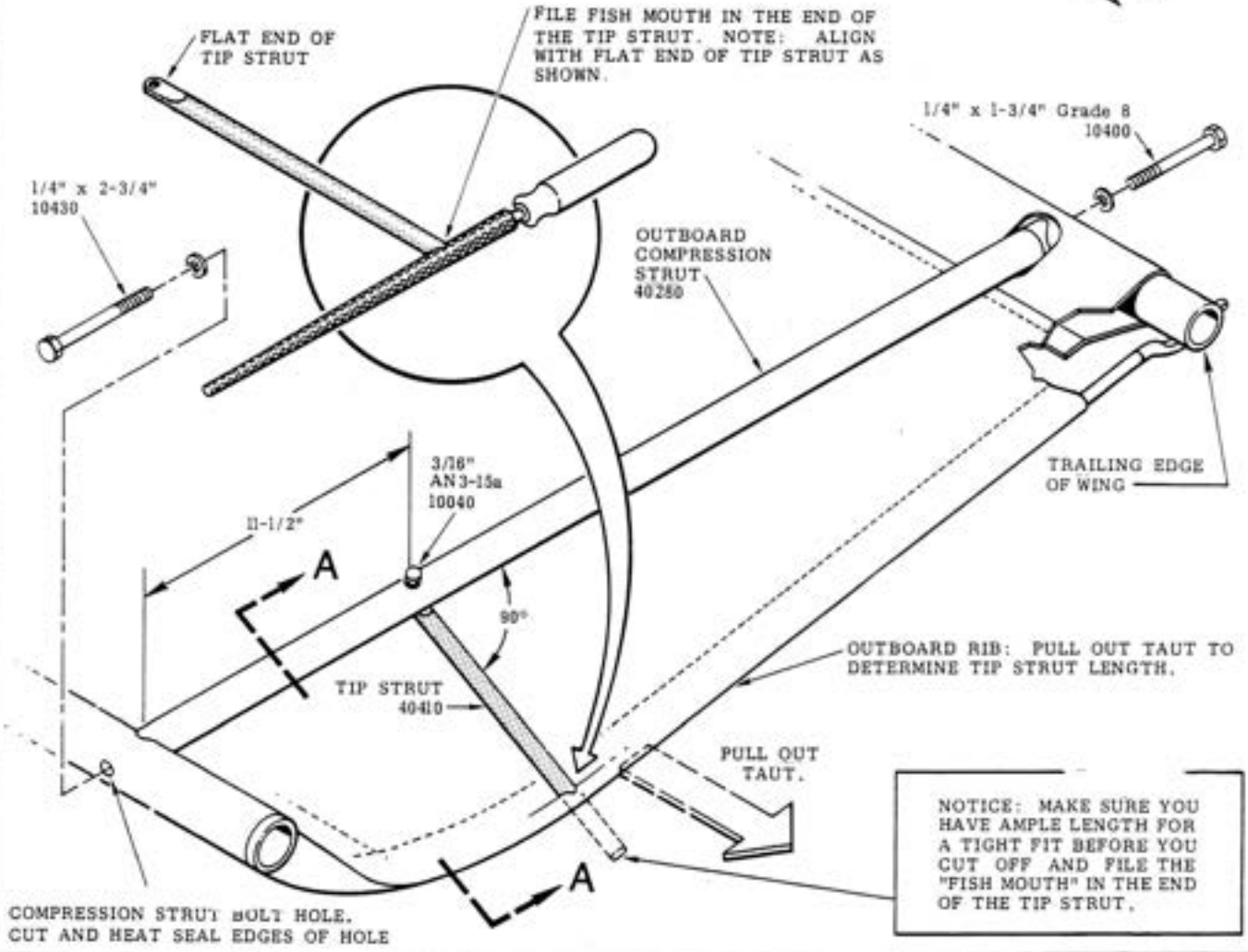

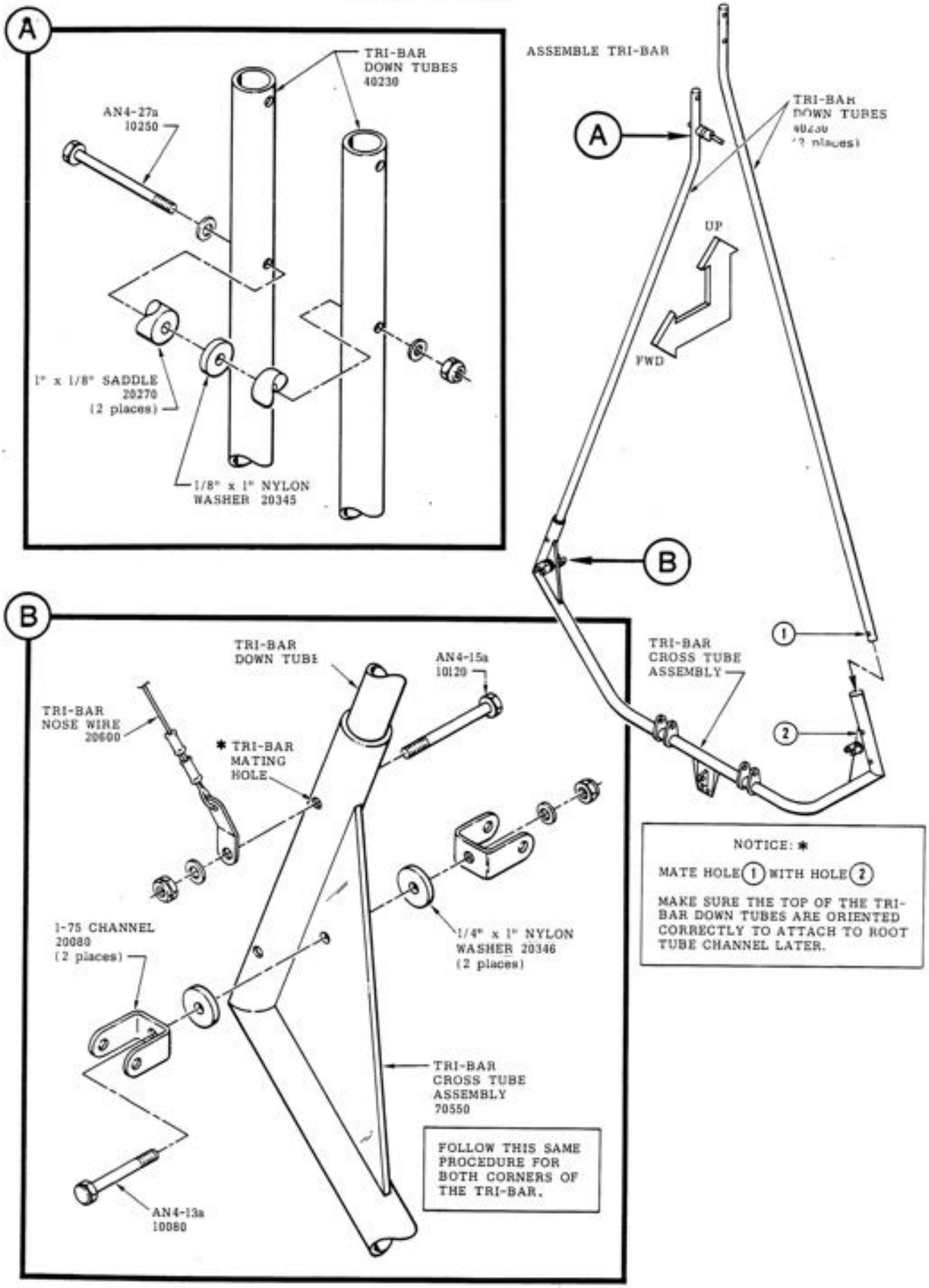
A
TRI-BAR DOWN TUBES 40230
AN4-27a 10250
1" x 1/8" SADDLE 20270 (2 places)
1/8" x 1" NYLON WASHER 20345
ASSEMBLE TRI-BAR
TRI-BAR DOWN TUBES
UP
FWD
B
TRI-BAR CROSS TUBE ASSEMBLY
1
2
B
TRI-BAR DOWN TUBE
AN4-15a 10120
TRI-BAR NOSE WIRE 20600
* TRI-BAR MATING HOLE
1-75 CHANNEL 20080 (2 places)
1/4" x 1" NYLON WASHER 20346 (2 places)
TRI-BAR CROSS TUBE ASSEMBLY 70550
AN4-13a 10080
FOLLOW THIS SAME PROCEDURE FOR BOTH CORNERS OF THE TRI-BAR.
NOTICE: *
MATE HOLE 1 WITH HOLE 2
MAKE SURE THE TOP OF THE TRI-BAR DOWN TUBES ARE ORIENTED CORRECTLY TO ATTACH TO ROOT TUBE CHANNEL LATER.

SECTION FOUR

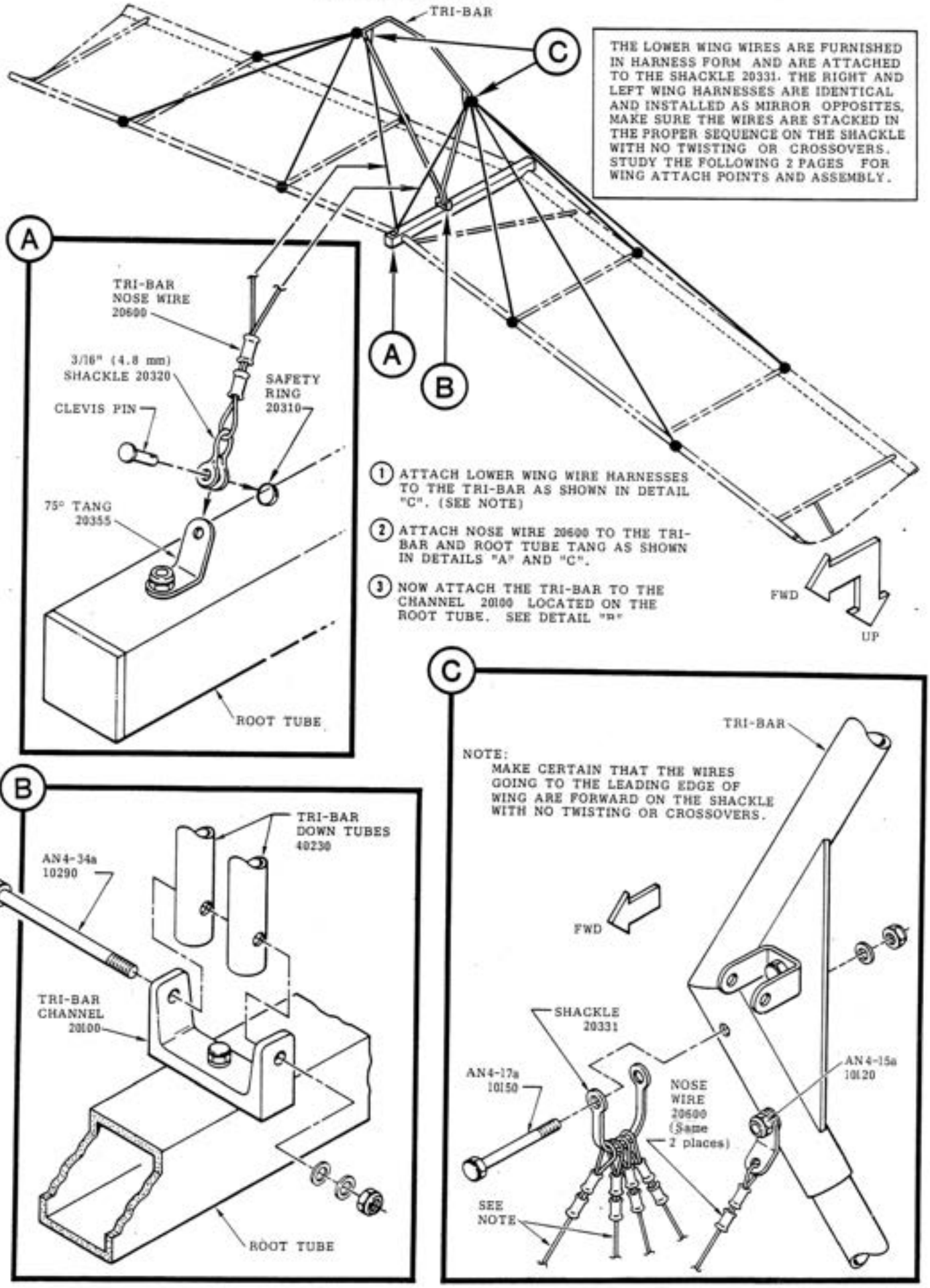

SECTION FOUR

LOWER WIRE SHACKLES 20331

1 LOWER L.E. INBD - 20540 see detail "A"

2 LOWER L.E. OUTBD - 20530 see detail "D"

3 LOWER T.E. OUTBD - 20520 see detail "C"

4 LOWER T.E. INBD - 20510 see detail "B"

INBD

OUTBD

OUTBD

INBD

TRAILING EDGE

UPPER WIRE SHACKLES 20330

LEADING EDGE

5 UPPER L.E. OUTBD - 20570 see detail "D"

6 UPPER T.E. OUTBD - 20560 see detail "C"

7 UPPER T.E. INBD - 20550 see detail "B"

8 UPPER L.E. INBD. - 20580 see detail "A"

THIS ILLUSTRATION SHOWS THE ATTACHING POINTS AND HARDWARE FOR BOTH THE UPPER AND LOWER WING WIRES. STUDY IT THOROUGHLY AND BECOME FAMILIAR WITH THE TERMINOLOGY SUCH AS "UPPER LEADING EDGE INBOARD""LOWER TRAILING EDGE OUTBOARD ETC."

WIRES ARE ATTACHED AS MIRROR OPPOSITES ON BOTH SIDES OF WING.

EACH WIRE CARRIES A SLEEVE THAT INDICATES ITS PART NUMBER. DO NOT REMOVE THIS SLEEVE.

A

LOWER and UPPER L.E. INBOARD

LOWER L.E. INBD 20540 REF 1

UPPER L.E. INBD 20580 REF 8

1/4" x 2-3/4" GRADE 8 10430

B

LOWER and UPPER T.E. INBD

1/4" x 2-1/4" GRADE 8 10420

20615 TO AXLE TANG SEE DETAIL "C" PAGE 33

LOWER T.E. INBD 20510 REF 4

FLAT TANG-20360
SHACKLE-20320
CLEVIS PIN-10440
SAFETY RING-20310

UPPER T.E. INBD 20550 REF 7

DETAILS CONTINUED NEXT PAGE

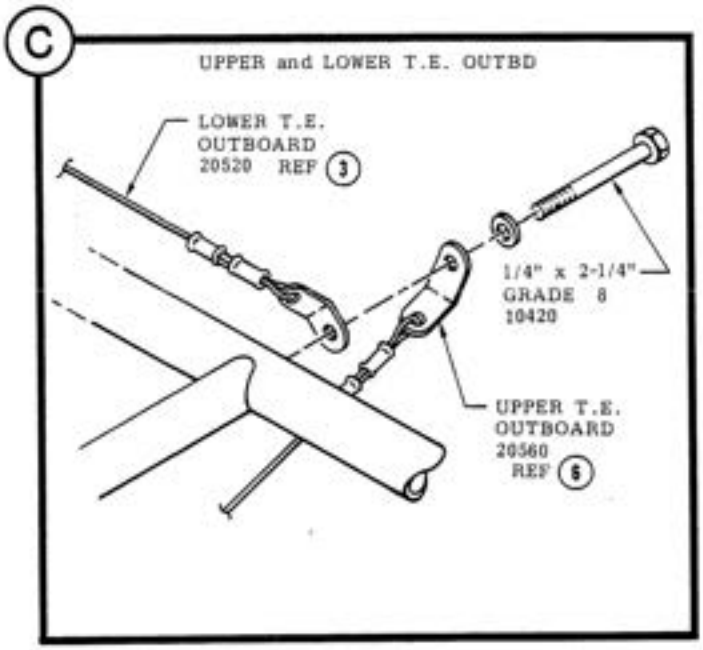
C
UPPER and LOWER T.E. OUTBD
LOWER T.E.
OUTBOARD
20520 REF 3
1/4" x 2-1/4"
GRADE 8
10420
UPPER T.E.
OUTBOARD
20560
REF 6

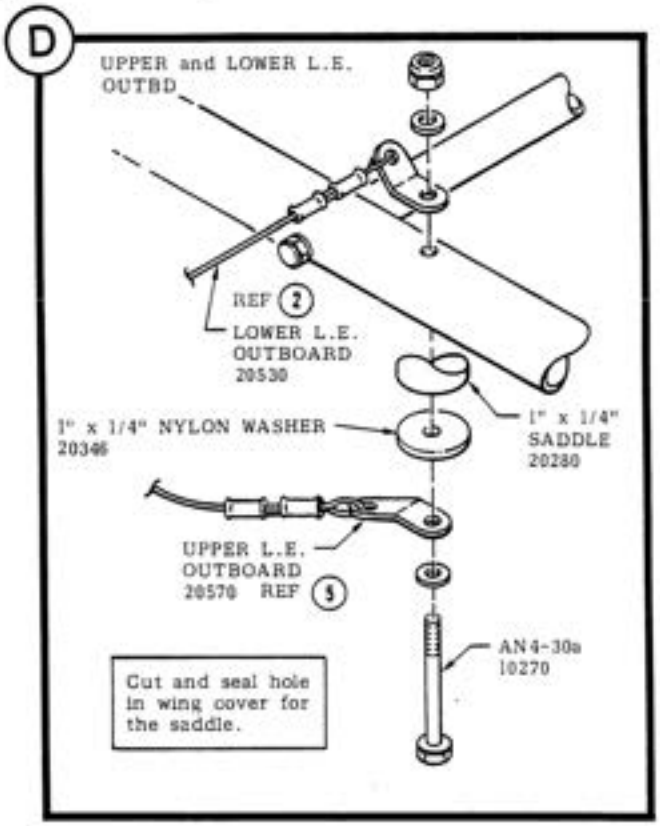
D
UPPER and LOWER L.E.
OUTBD
REF 2
LOWER L.E.
OUTBOARD
20530
1" x 1/4" NYLON WASHER
20346
1" x 1/4"
SADDLE
20280
UPPER L.E.
OUTBOARD
20570 REF 5
AN4-30a
10270
Cut and seal hole
in wing cover for
the saddle.

TWIST KING POST TO ITS SHORTEST LENGTH BEFORE ATTACHING WIRE SHACKLES. ALL WIRES CARRY A SLEEVE INDICATING ITS PART NUMBER. DO NOT REMOVE THIS SLEEVE.

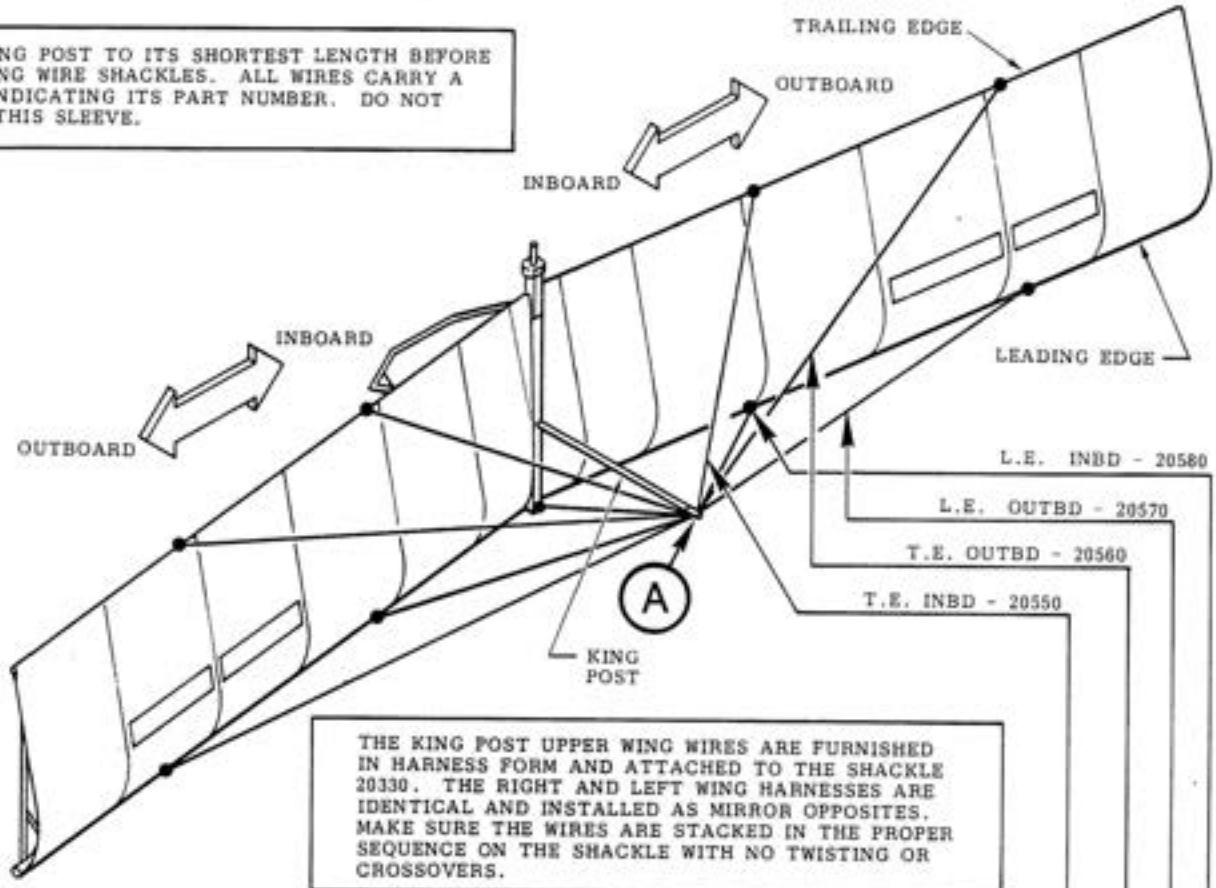

THE KING POST UPPER WING WIRES ARE FURNISHED IN HARNESS FORM AND ATTACHED TO THE SHACKLE 20330. THE RIGHT AND LEFT WING HARNESSES ARE IDENTICAL AND INSTALLED AS MIRROR OPPOSITES. MAKE SURE THE WIRES ARE STACKED IN THE PROPER SEQUENCE ON THE SHACKLE WITH NO TWISTING OR CROSSOVERS.

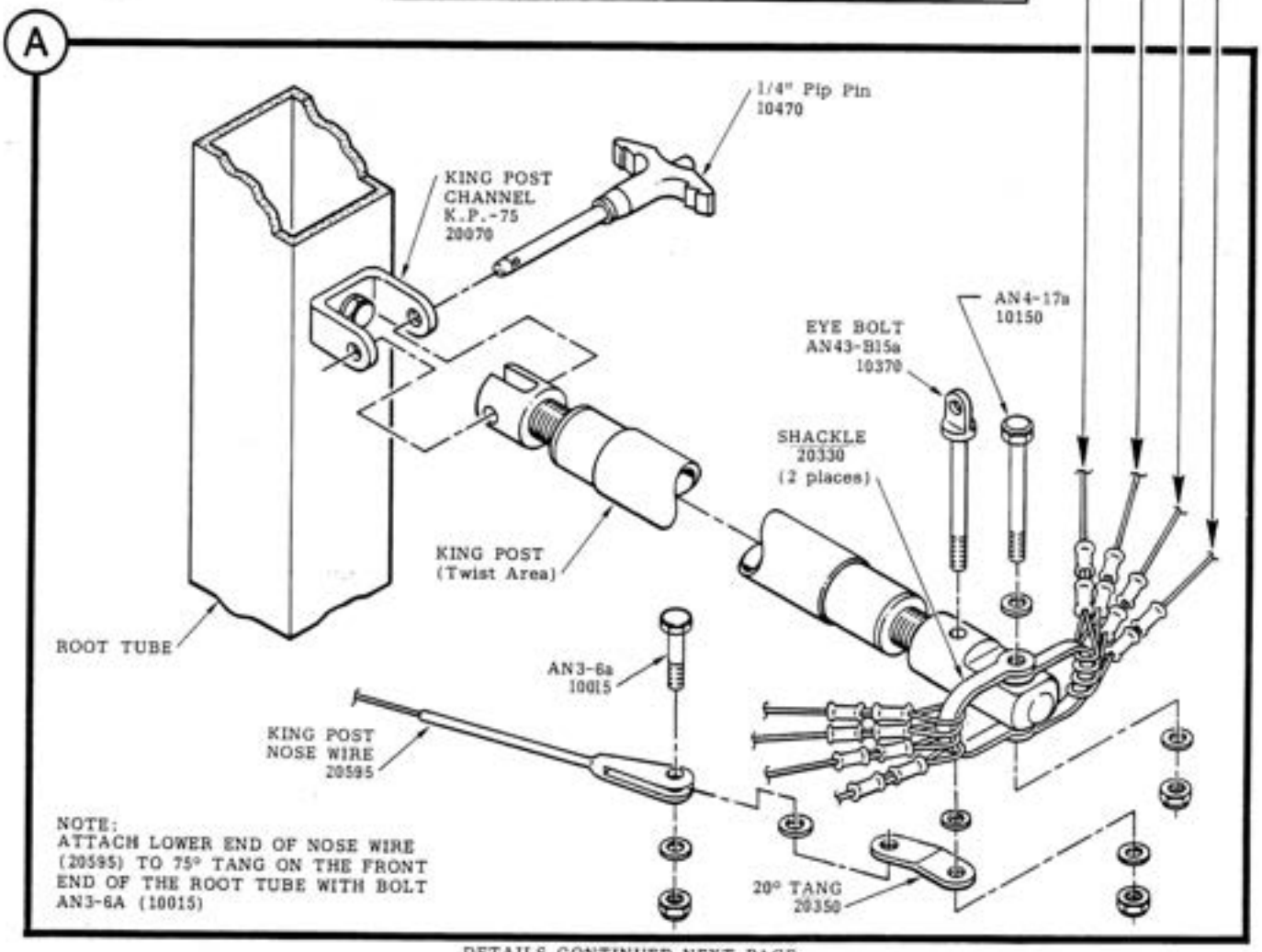

NOTE:
ATTACH LOWER END OF NOSE WIRE (20595) TO 75° TANG ON THE FRONT END OF THE ROOT TUBE WITH BOLT AN3-6A (10015)

DETAILS CONTINUED NEXT PAGE

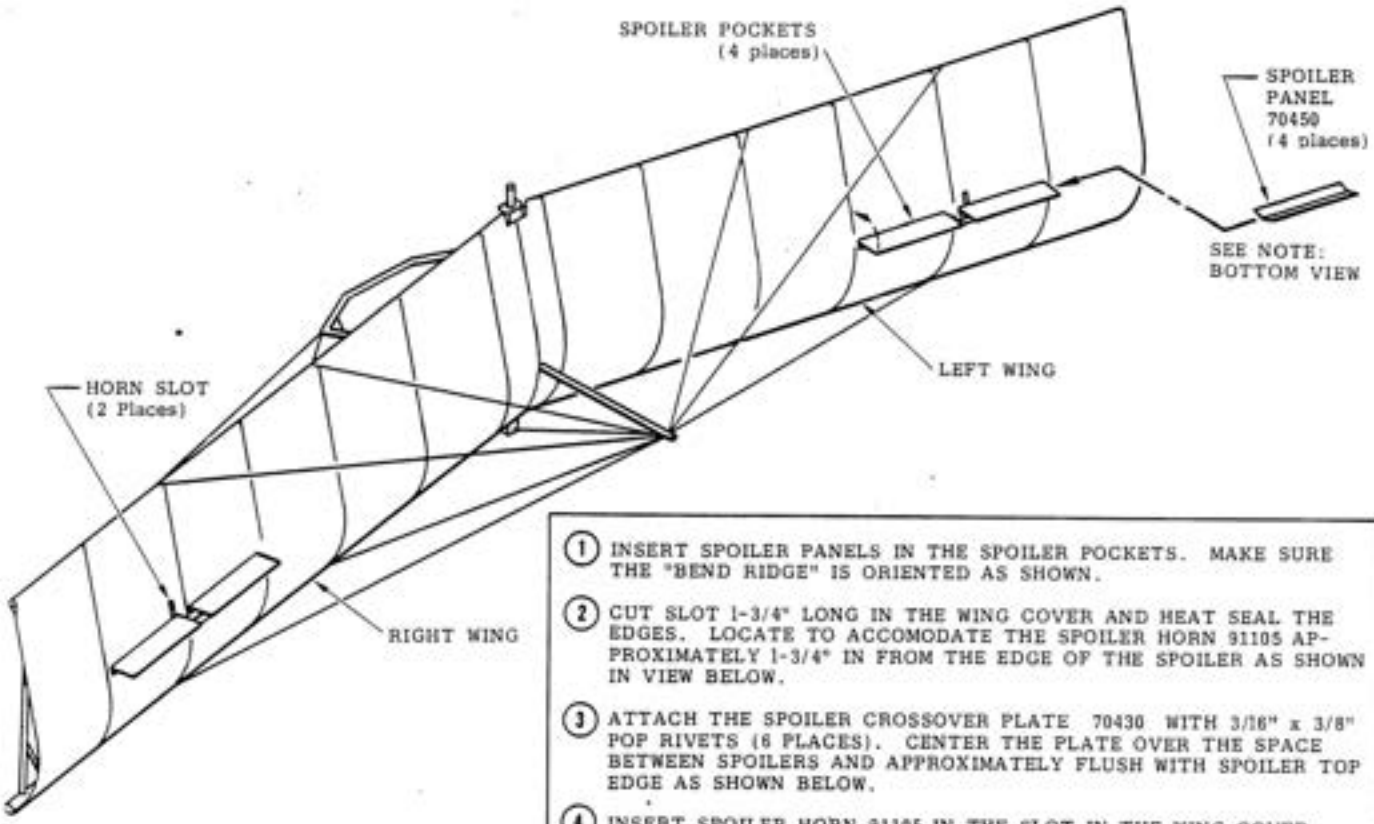

1. INSERT SPOILER PANELS IN THE SPOILER POCKETS. MAKE SURE THE "BEND RIDGE" IS ORIENTED AS SHOWN.
2. CUT SLOT 1-3/4" LONG IN THE WING COVER AND HEAT SEAL THE EDGES. LOCATE TO ACCOMODATE THE SPOILER HORN 91105 APPROXIMATELY 1-3/4" IN FROM THE EDGE OF THE SPOILER AS SHOWN IN VIEW BELOW.
3. ATTACH THE SPOILER CROSSOVER PLATE 70430 WITH 3/16" x 3/8" POP RIVETS (6 PLACES). CENTER THE PLATE OVER THE SPACE BETWEEN SPOILERS AND APPROXIMATELY FLUSH WITH SPOILER TOP EDGE AS SHOWN BELOW.
4. INSERT SPOILER HORN 91105 IN THE SLOT IN THE WING COVER AND LOCATE ON THE SPOILER AS PER DEMENSIONS SHOWN. POP RIVET TO SPOILER (3 PLACES). SEE NEXT PAGE FOR HORN INSTALLATION ON RIGHT WING SPOILERS.

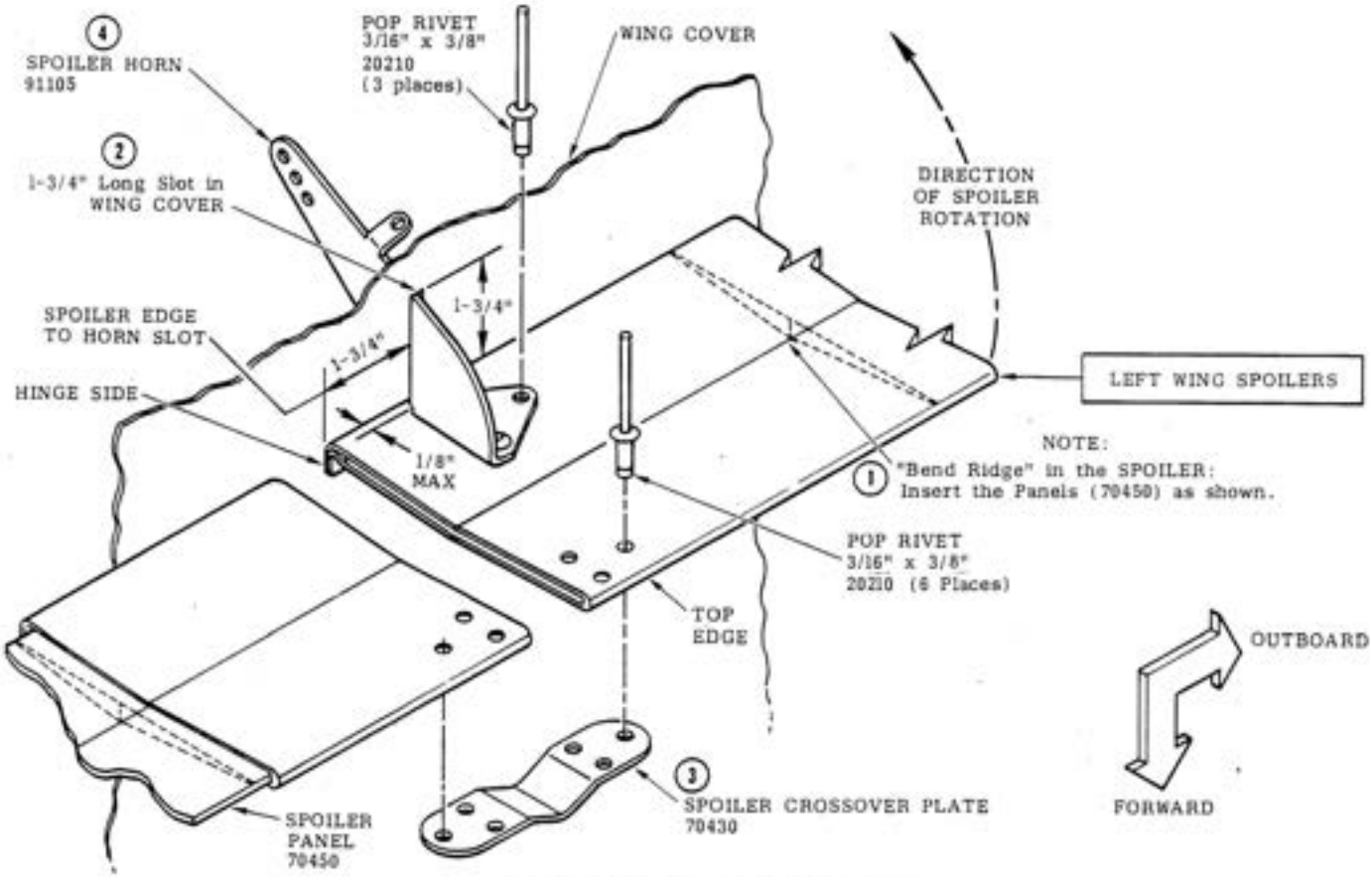

DETAILS CONTINUED ON NEXT PAGE

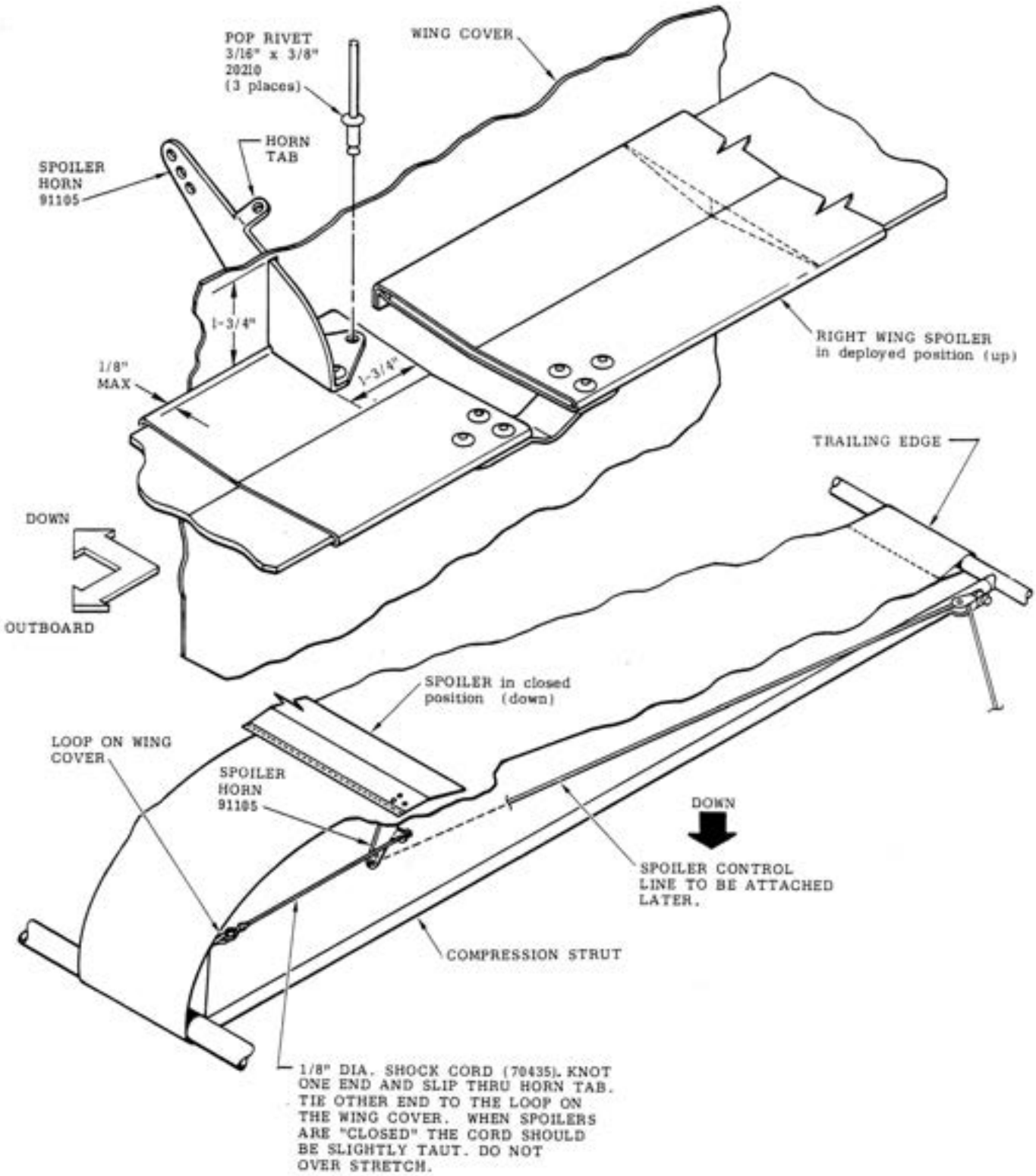

ASSEMBLE RIGHT WING SPOILERS THE SAME AS THE LEFT WING SPOILERS EXCEPT FOR THE SPOILER HORN (91105). THE ATTACHING RIVET HOLE LOCATION WILL BE DIFFERENT AS NOTED DUE TO THE HORNS NOT BEING BENT IN RIGHT AND LEFT HAND PAIRS.
NOTE: WHEN ATTACHING HORN AND CROSSOVER PLATES IT IS ADVISABLE TO DRILL AND RIVET ONE HOLE AND ALIGN UNITS BEFORE INSTALLING THE REMAINING RIVETS.

NOTE:
SLIP THE SAFETY CABLE 20630 ON THE AXLE 40310 BEFORE STARTING ANY OF THE OTHER ASSEMBLIES

ITEMS SUCH AS WINGS, ETC. THAT HAVE BEEN PREVIOUSLY INSTALLED WITH REALATIONSHIP TO THIS LANDING GEAR ASSEMBLY ARE NOT SHOWN IN ORDER TO SIMPLIFY VISUAL PROCEDURE FOR THE TASK AT HAND.

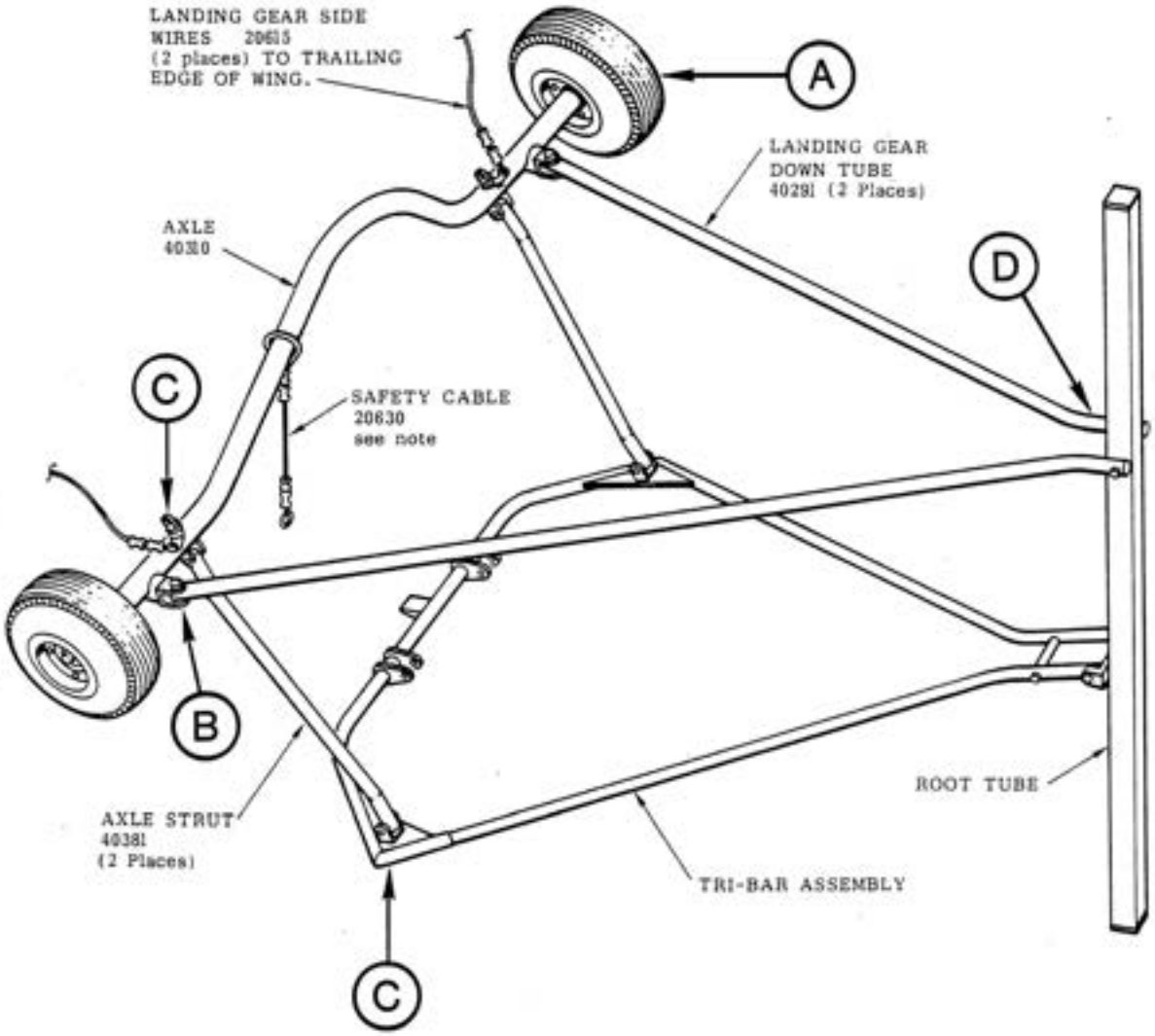

A

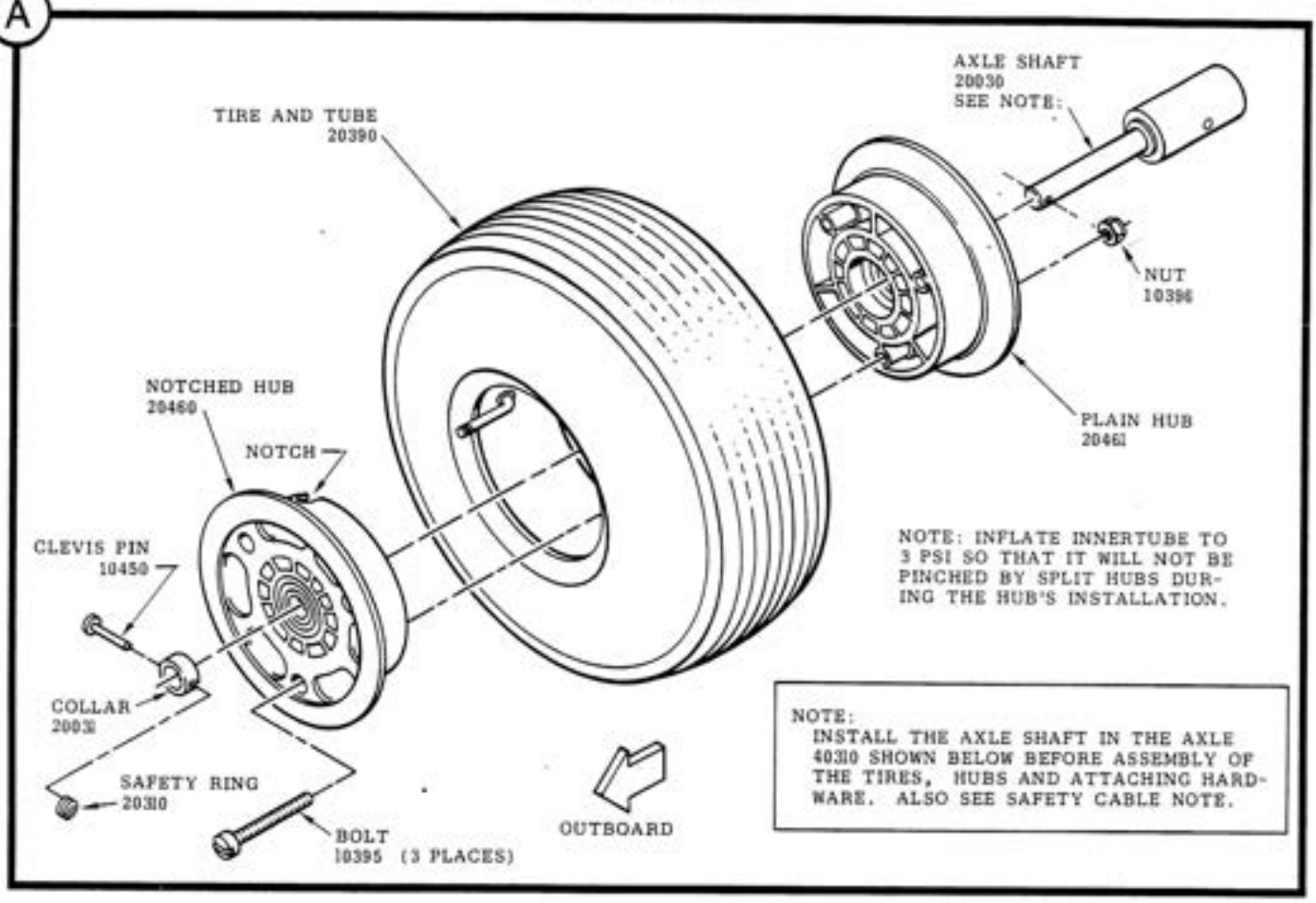
AXLE SHAFT
20030
SEE NOTE:
TIRE AND TUBE
20390
NUT
10396
NOTCHED HUB
20460
NOTCH
PLAIN HUB
20461
CLEVIS PIN
10450
COLLAR
20031
SAFETY RING
20310
BOLT
10395 (3 PLACES)
OUTBOARD
NOTE: INFLATE INNERTUBE TO 3 PSI SO THAT IT WILL NOT BE PINCHED BY SPLIT HUBS DURING THE HUB'S INSTALLATION.
NOTE:
INSTALL THE AXLE SHAFT IN THE AXLE 40310 SHOWN BELOW BEFORE ASSEMBLY OF THE TIRES, HUBS AND ATTACHING HARDWARE. ALSO SEE SAFETY CABLE NOTE.

B

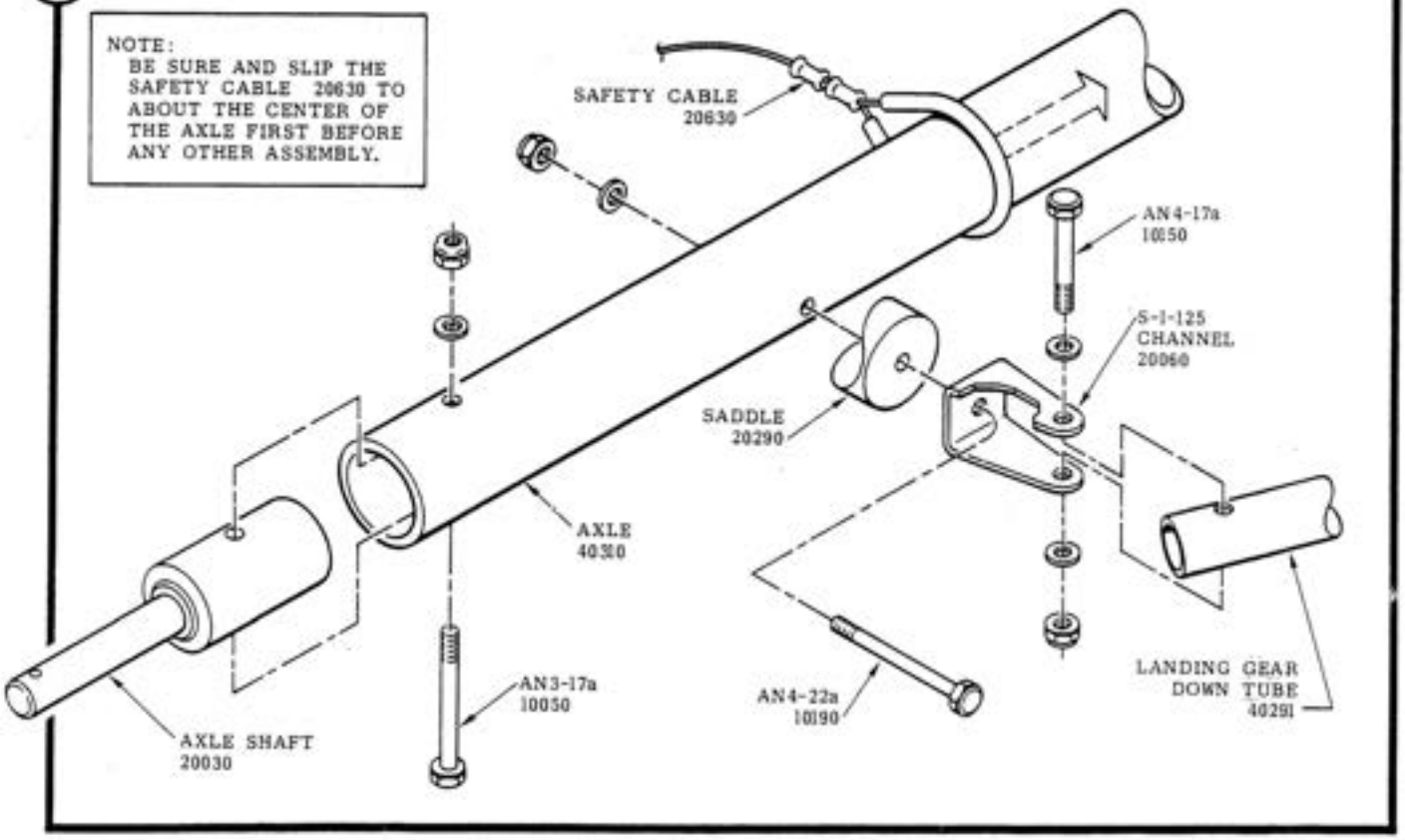
NOTE:
BE SURE AND SLIP THE SAFETY CABLE 20630 TO ABOUT THE CENTER OF THE AXLE FIRST BEFORE ANY OTHER ASSEMBLY.
SAFETY CABLE
20630
AN4-17a
10050
S-1-125
CHANNEL
20060
SADDLE
20290
AXLE
40310
AN3-17a
10050
AN4-22a
10190
LANDING GEAR
DOWN TUBE
40291
AXLE SHAFT
20030

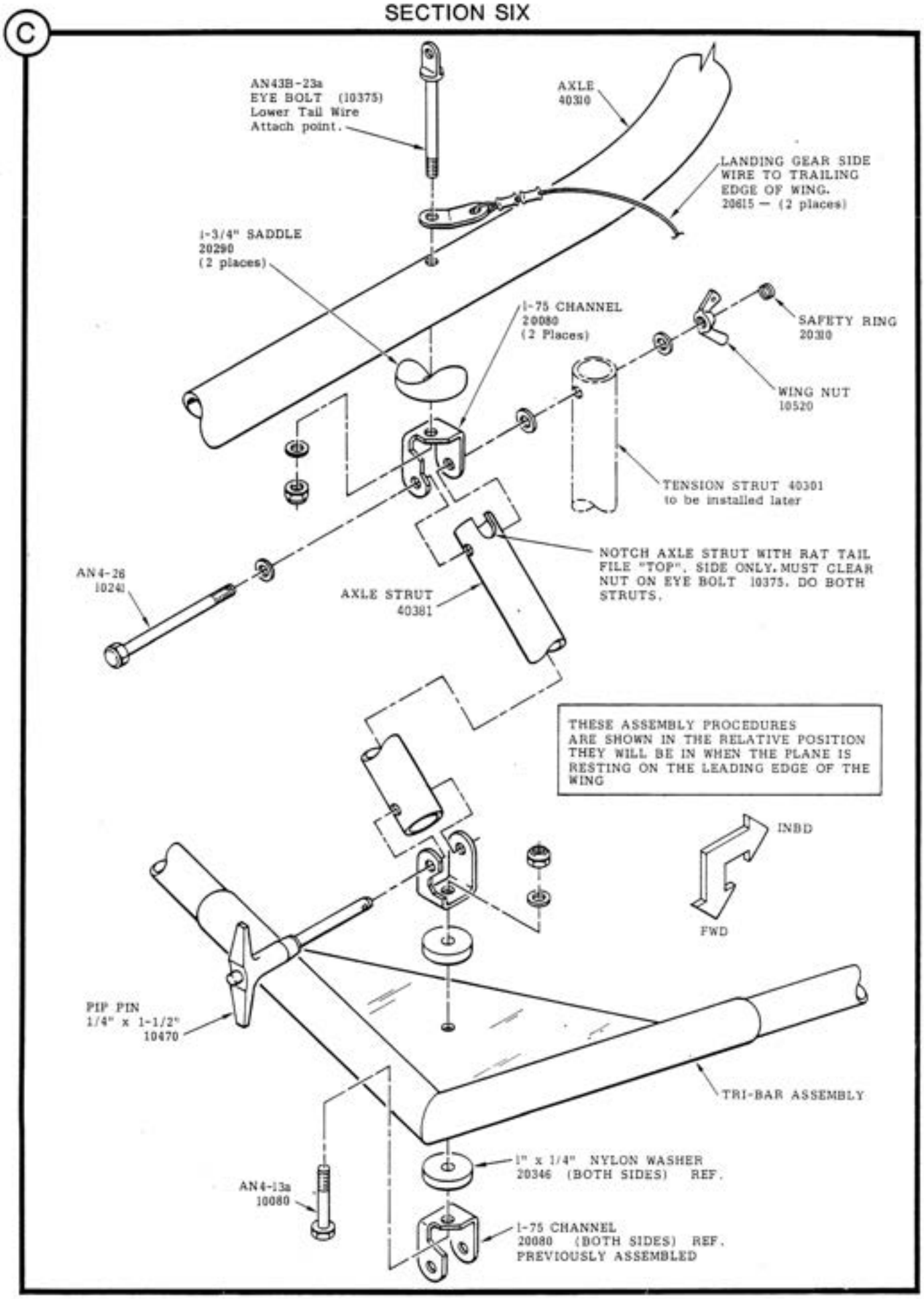
C
AN43B-23a
EYE BOLT (10375)
Lower Tail Wire
Attach point.
AXLE
40310
LANDING GEAR SIDE
WIRE TO TRAILING
EDGE OF WING.
20615 — (2 places)
1-3/4" SADDLE
20290
(2 places)
1-75 CHANNEL
20080
(2 Places)
SAFETY RING
20310
WING NUT
10520
TENSION STRUT 40301
to be installed later
NOTCH AXLE STRUT WITH RAT TAIL
FILE "TOP". SIDE ONLY. MUST CLEAR
NUT ON EYE BOLT 10375. DO BOTH
STRUTS.
AN4-26
10240
AXLE STRUT
40381
THESE ASSEMBLY PROCEDURES
ARE SHOWN IN THE RELATIVE POSITION
THEY WILL BE IN WHEN THE PLANE IS
RESTING ON THE LEADING EDGE OF THE
WING
INBD
FWD
PIP PIN
1/4" x 1-1/2"
10470
TRI-BAR ASSEMBLY
1" x 1/4" NYLON WASHER
20346 (BOTH SIDES) REF.
AN4-13a
10080
1-75 CHANNEL
20080 (BOTH SIDES) REF.
PREVIOUSLY ASSEMBLED

D

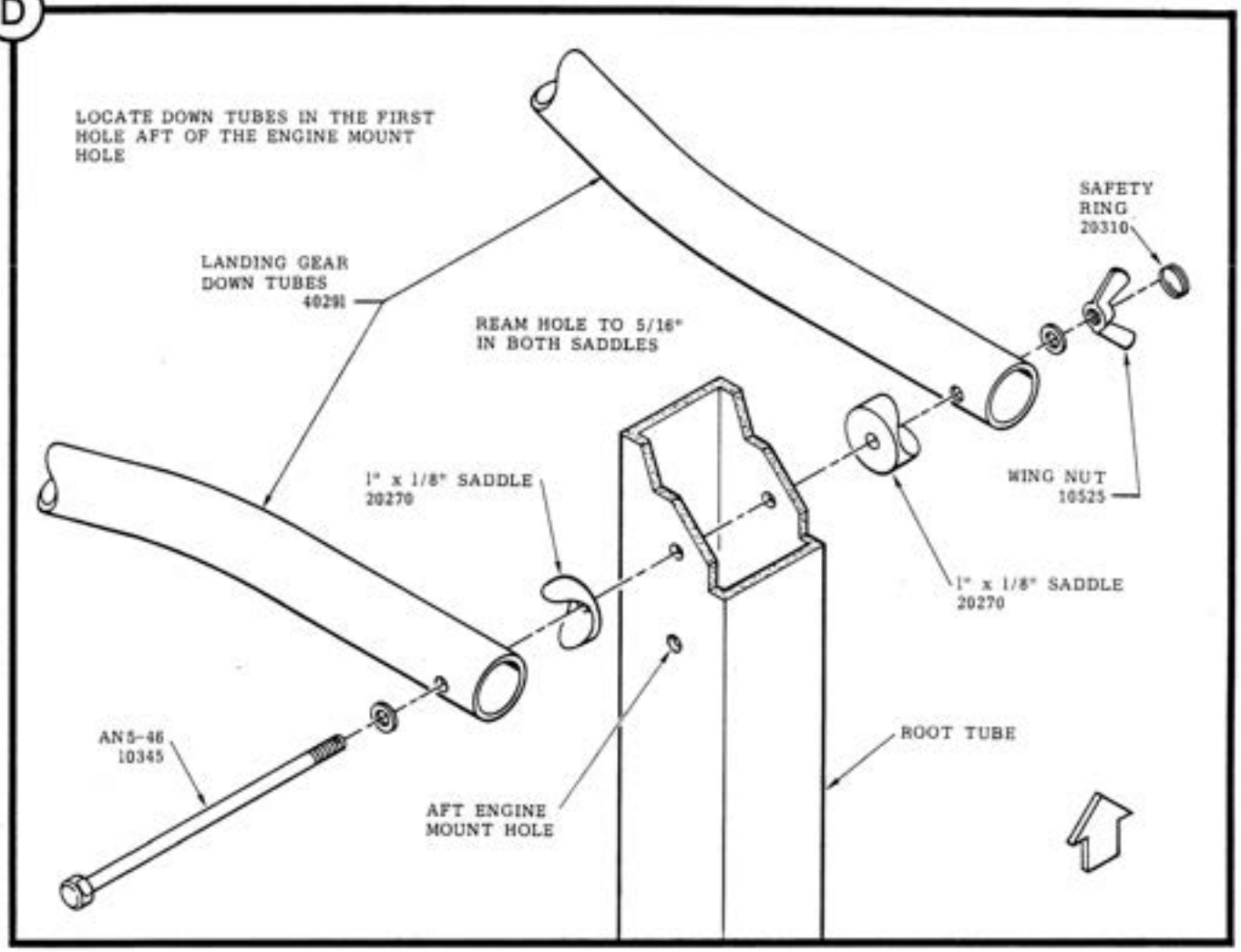
LOCATE DOWN TUBES IN THE FIRST HOLE AFT OF THE ENGINE MOUNT HOLE
LANDING GEAR DOWN TUBES 40291
REAM HOLE TO 5/16" IN BOTH SADDLES
SAFETY RING 20310
WING NUT 10525
1" x 1/8" SADDLE 20270
1" x 1/8" SADDLE 20270
AN5-46 10345
AFT ENGINE MOUNT HOLE
ROOT TUBE

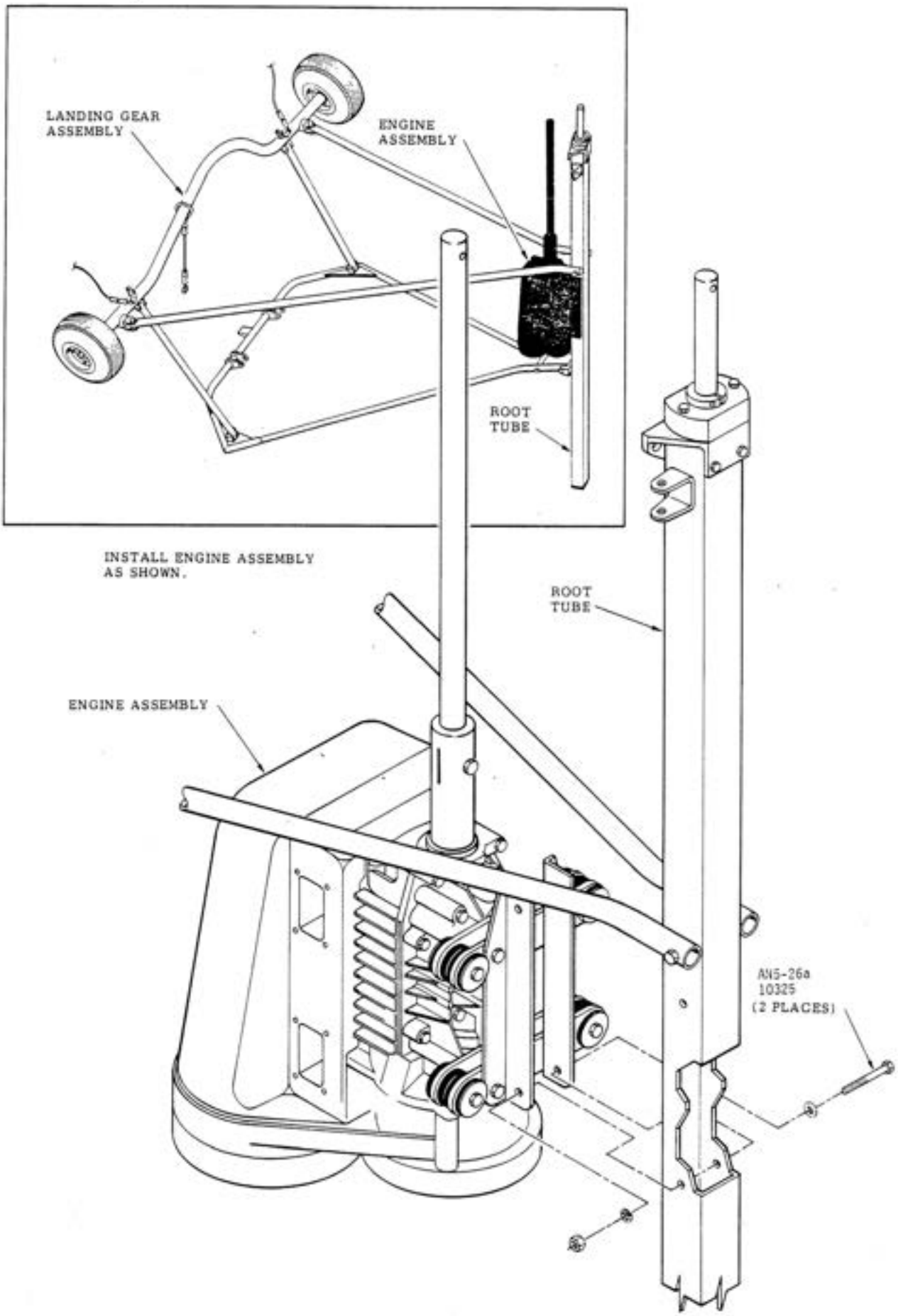
LANDING GEAR ASSEMBLY
ENGINE ASSEMBLY
ROOT TUBE
INSTALL ENGINE ASSEMBLY AS SHOWN.
ROOT TUBE
ENGINE ASSEMBLY
AN5-26a
10325
(2 PLACES)

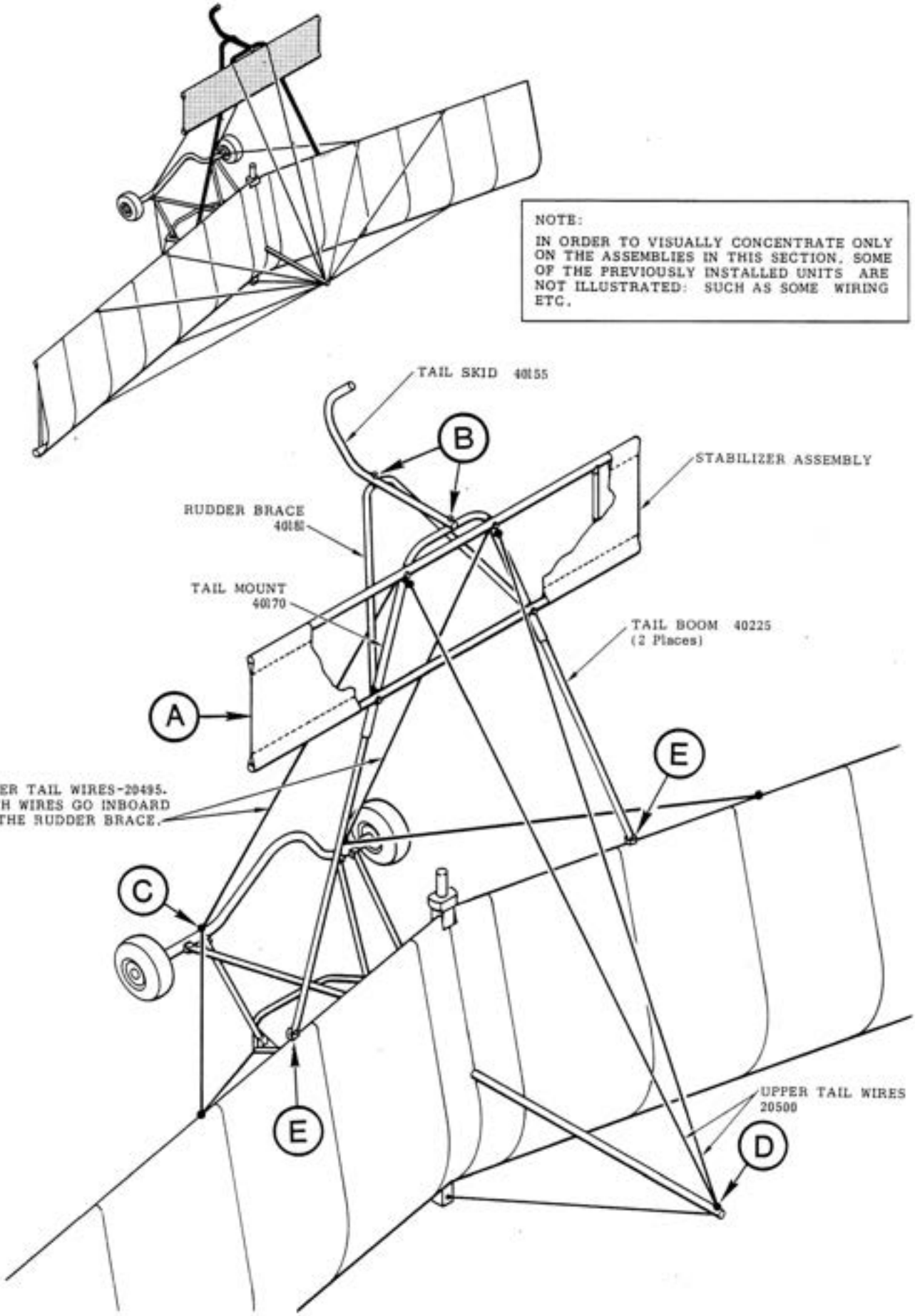
NOTE:
IN ORDER TO VISUALLY CONCENTRATE ONLY ON THE ASSEMBLIES IN THIS SECTION, SOME OF THE PREVIOUSLY INSTALLED UNITS ARE NOT ILLUSTRATED: SUCH AS SOME WIRING ETC.
TAIL SKID 40155
B
STABILIZER ASSEMBLY
RUDDER BRACE
TAIL MOUNT
40170
TAIL BOOM 40225
(2 Places)
A
E
LOWER TAIL WIRES-20495.
BOTH WIRES GO INBOARD
OF THE RUDDER BRACE.
C
E
UPPER TAIL WIRES
20500
D

A

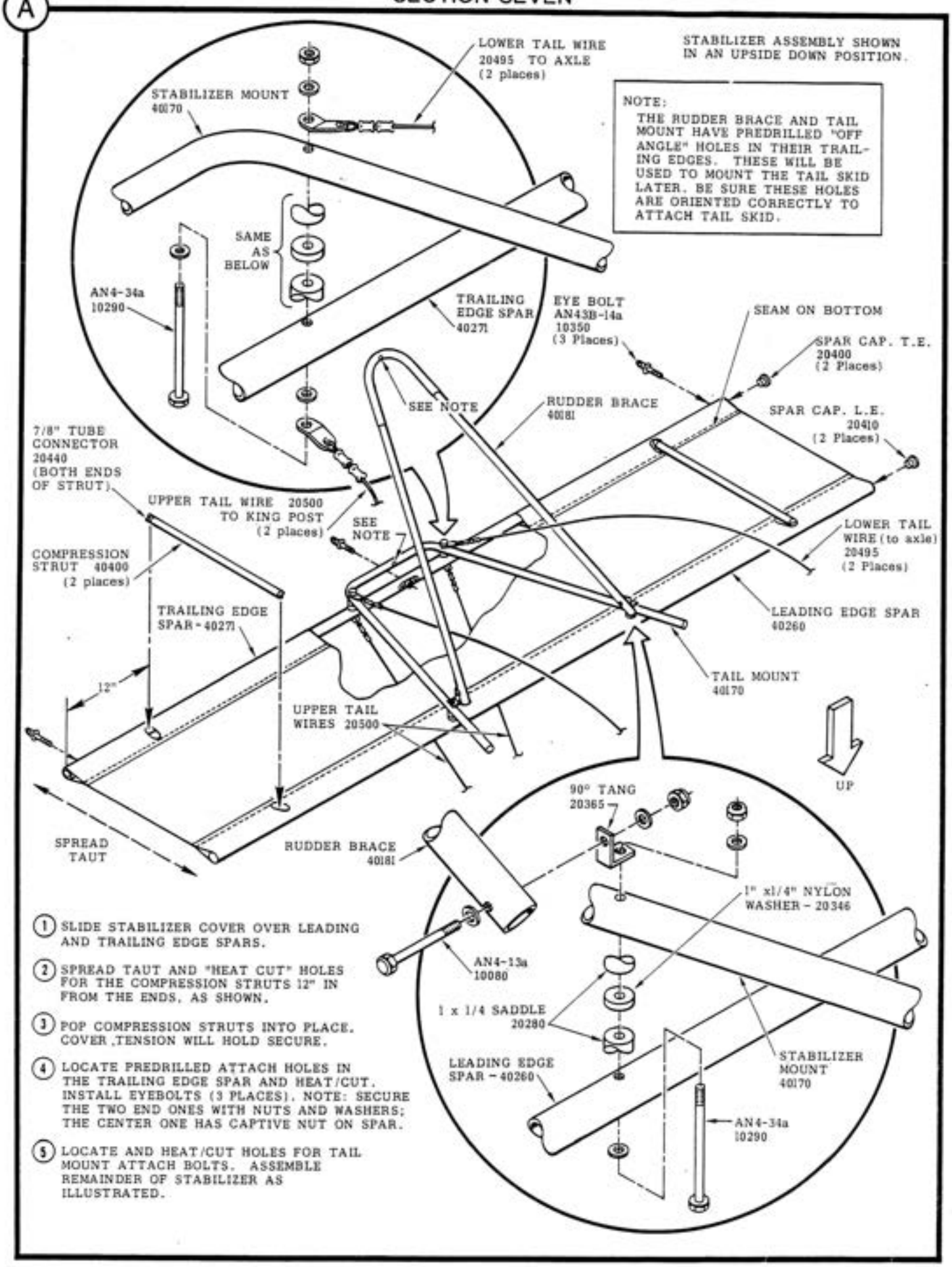

1. SLIDE STABILIZER COVER OVER LEADING AND TRAILING EDGE SPARS.
2. SPREAD TAUT AND "HEAT CUT" HOLES FOR THE COMPRESSION STRUTS 12" IN FROM THE ENDS, AS SHOWN.
3. POP COMPRESSION STRUTS INTO PLACE. COVER ,TENSION WILL HOLD SECURE.
4. LOCATE PREDRILLED ATTACH HOLES IN THE TRAILING EDGE SPAR AND HEAT/CUT. INSTALL EYEBOLTS (3 PLACES). NOTE: SECURE THE TWO END ONES WITH NUTS AND WASHERS; THE CENTER ONE HAS CAPTIVE NUT ON SPAR.
5. LOCATE AND HEAT/CUT HOLES FOR TAIL MOUNT ATTACH BOLTS. ASSEMBLE REMAINDER OF STABILIZER AS ILLUSTRATED.

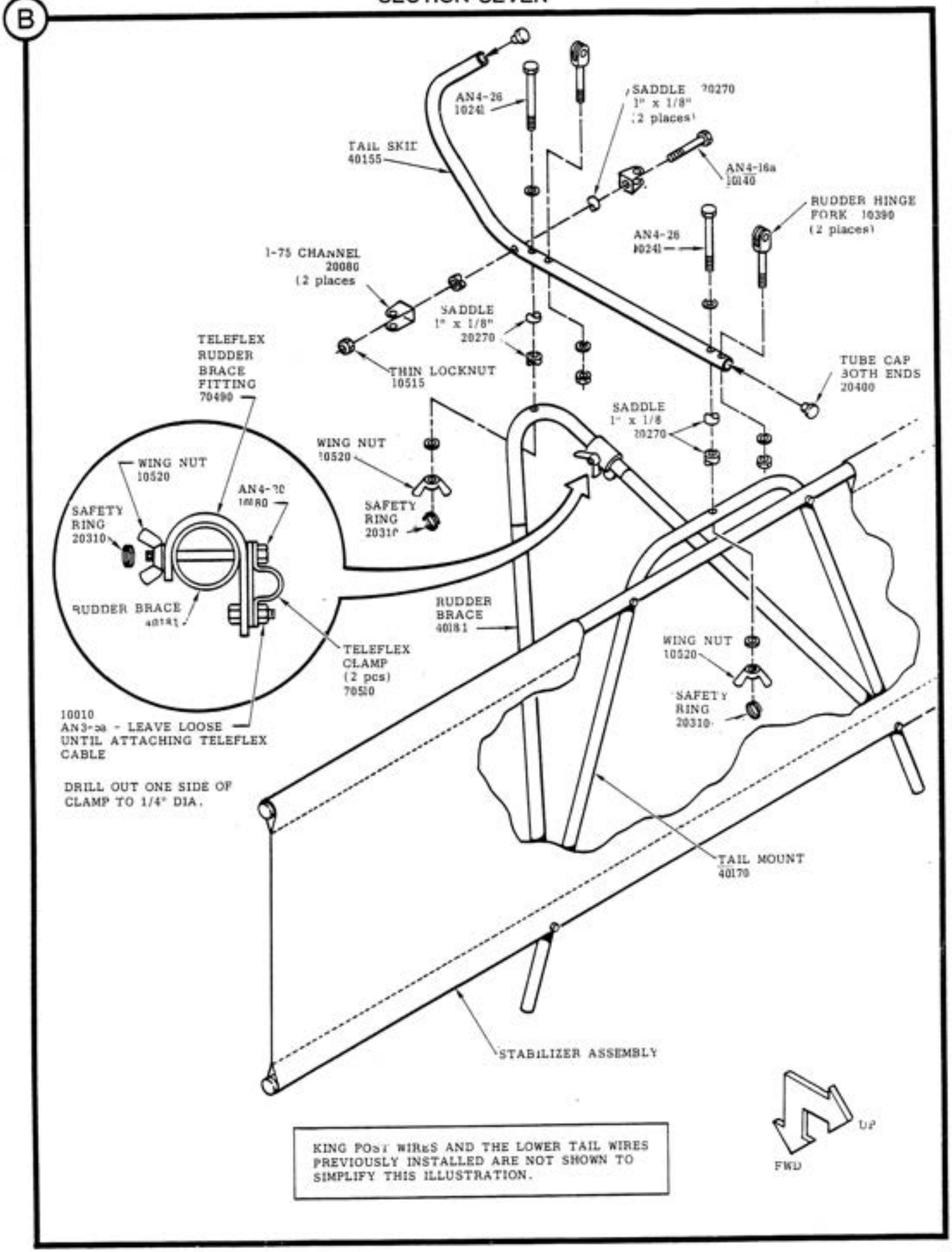
B
AN4-26
10241
SADDLE 20270
1" x 1/8"
(2 places)
TAIL SKID
40155
AN4-16a
10140
RUDDER HINGE
FORK 10390
(2 places)
AN4-26
10241
1-75 CHANNEL
20080
(2 places
SADDLE
1" x 1/8"
20270
TELEFLEX
RUDDER
BRACE
FITTING
70490
THIN LOCKNUT
10515
TUBE CAP
BOTH ENDS
20400
SADDLE
1" x 1/8
20270
WING NUT
10520
WING NUT
10520
SAFETY
RING
20310
SAFETY
RING
20310
RUDDER BRACE
40181
RUDDER
BRACE
40181
TELEFLEX
CLAMP
(2 pcs)
70520
WING NUT
10520
SAFETY
RING
20310
10010
AN3-5a - LEAVE LOOSE
UNTIL ATTACHING TELEFLEX
CABLE
DRILL OUT ONE SIDE OF
CLAMP TO 1/4" DIA.
TAIL MOUNT
40170
STABILIZER ASSEMBLY
KING POST WIRES AND THE LOWER TAIL WIRES
PREVIOUSLY INSTALLED ARE NOT SHOWN TO
SIMPLIFY THIS ILLUSTRATION.
UP
FWD

C

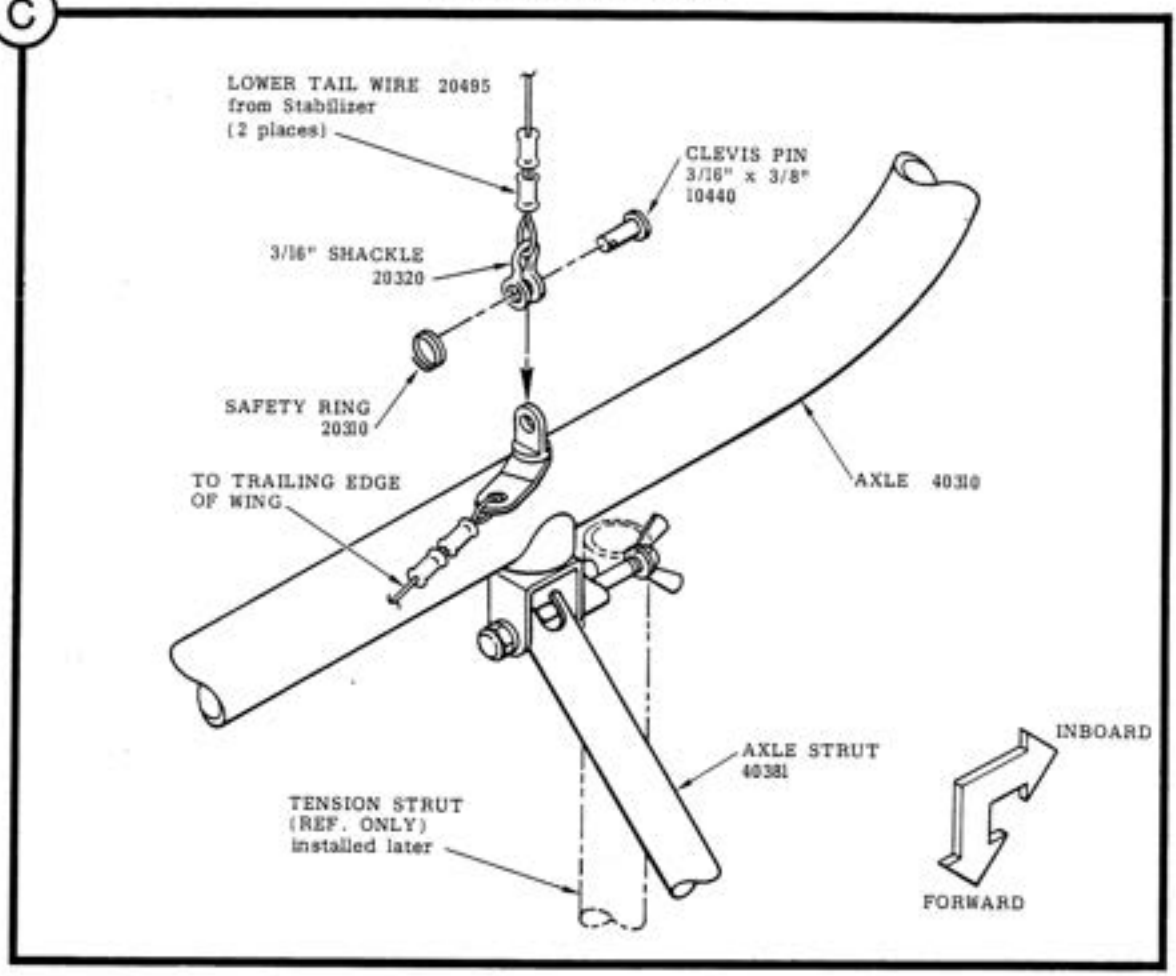
LOWER TAIL WIRE 20495
from Stabilizer
(2 places)
CLEVIS PIN
3/16" x 3/8"
10440
3/16" SHACKLE
20320
SAFETY RING
20310
TO TRAILING EDGE
OF WING
AXLE 40310
AXLE STRUT
40381
TENSION STRUT
(REF. ONLY)
installed later
INBOARD
FORWARD

D

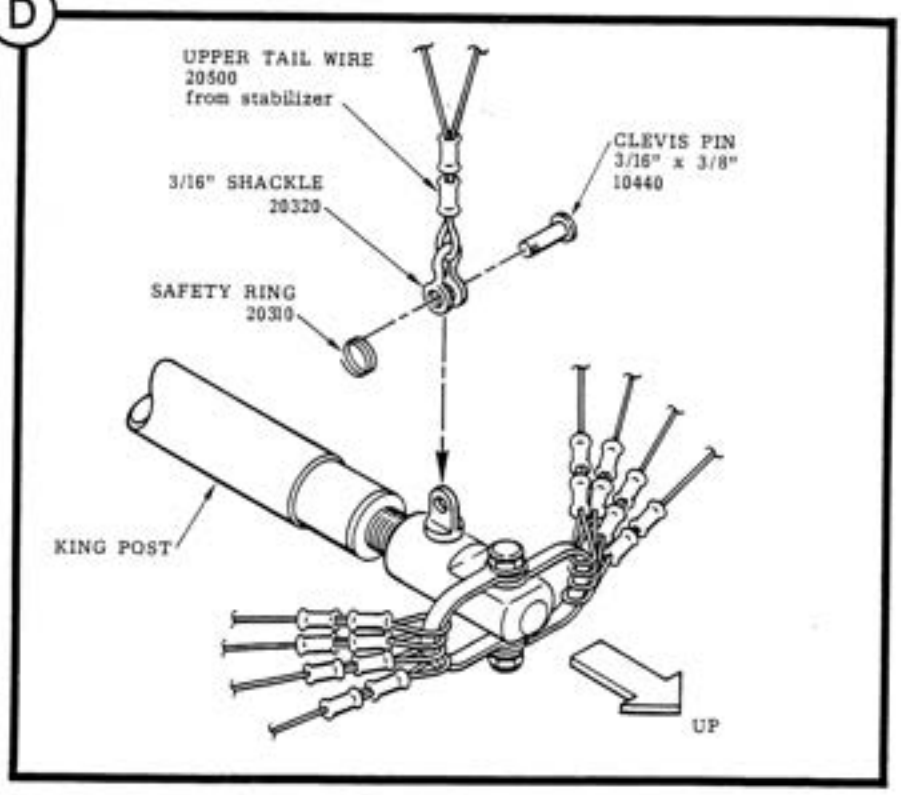
UPPER TAIL WIRE
20500
from stabilizer
CLEVIS PIN
3/16" x 3/8"
10440
3/16" SHACKLE
20320
SAFETY RING
20310
KING POST
UP

E

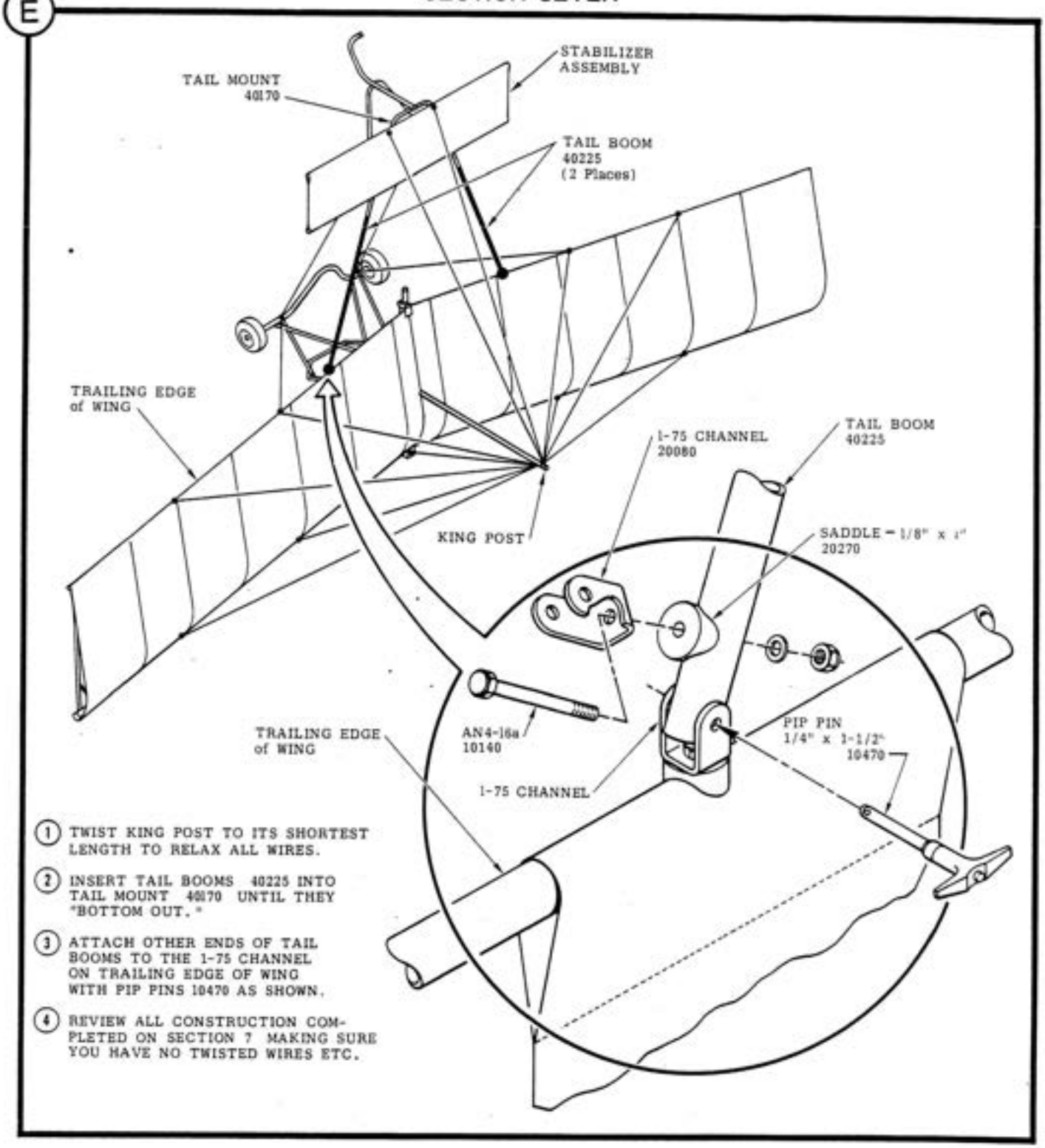

1. TWIST KING POST TO ITS SHORTEST LENGTH TO RELAX ALL WIRES.
2. INSERT TAIL BOOMS 40225 INTO TAIL MOUNT 40170 UNTIL THEY "BOTTOM OUT."
3. ATTACH OTHER ENDS OF TAIL BOOMS TO THE 1-75 CHANNEL ON TRAILING EDGE OF WING WITH PIP PINS 10470 AS SHOWN.
4. REVIEW ALL CONSTRUCTION COMPLETED ON SECTION 7 MAKING SURE YOU HAVE NO TWISTED WIRES ETC.

AT THIS STAGE OF ASSEMBLY YOU MAY NEED A FRIEND TO GIVE YOU A HELPING HAND TO LIFT. LOCATE AND ATTACH THE STABILIZER ASSEMBLY AND TAIL BOOMS TO THE TRAILING EDGE OF WING.

SECTION EIGHT

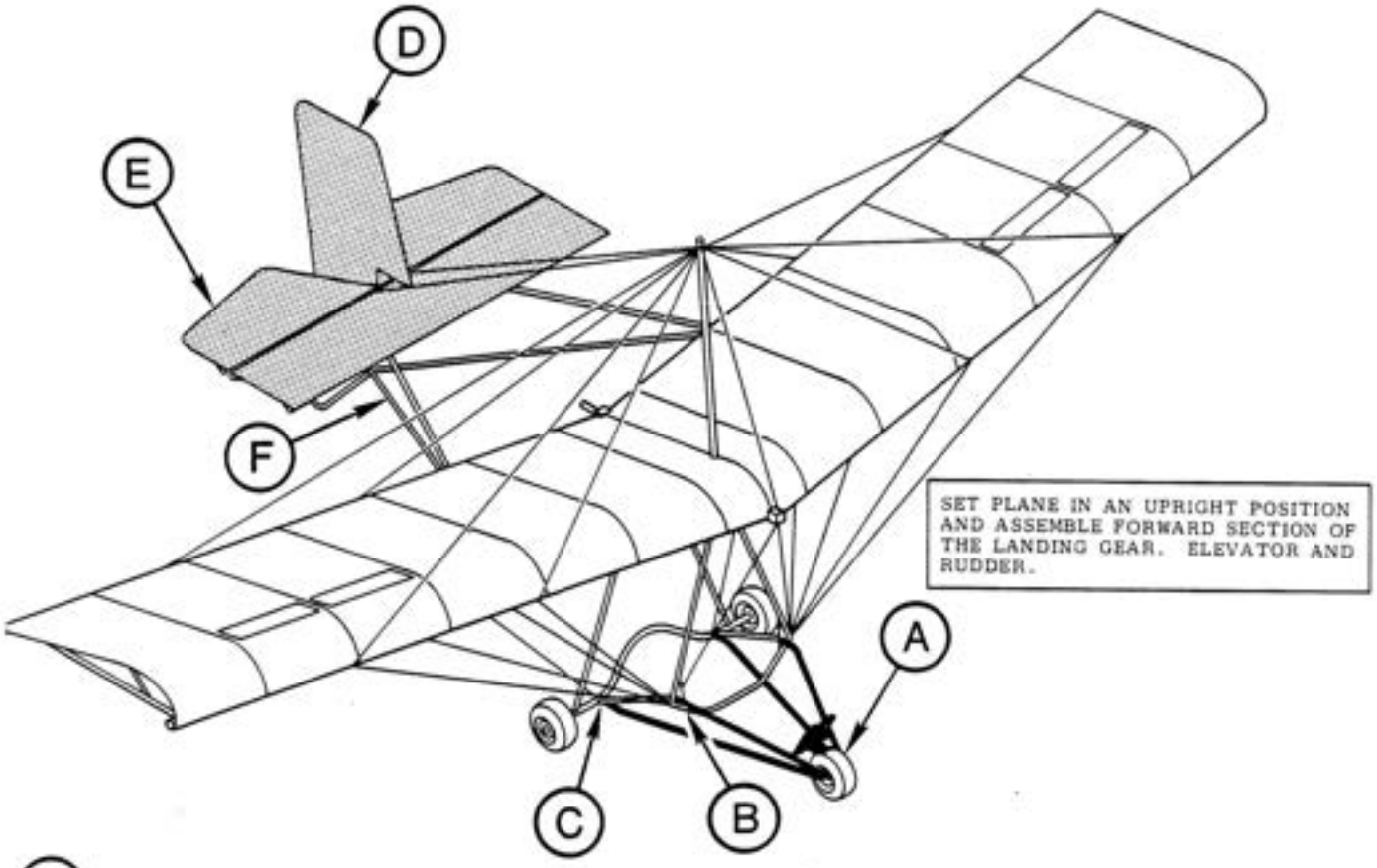

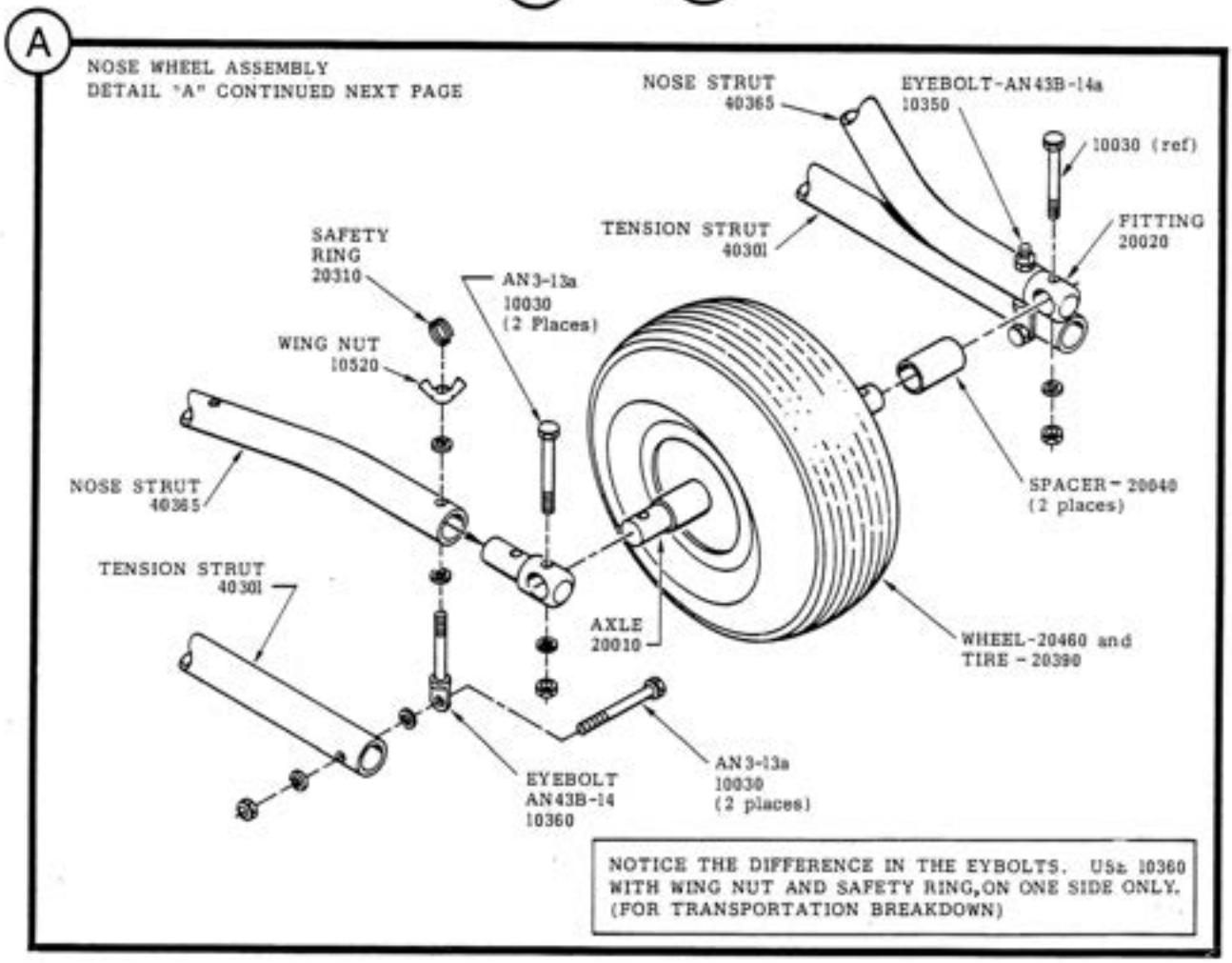

A

CONTINUED

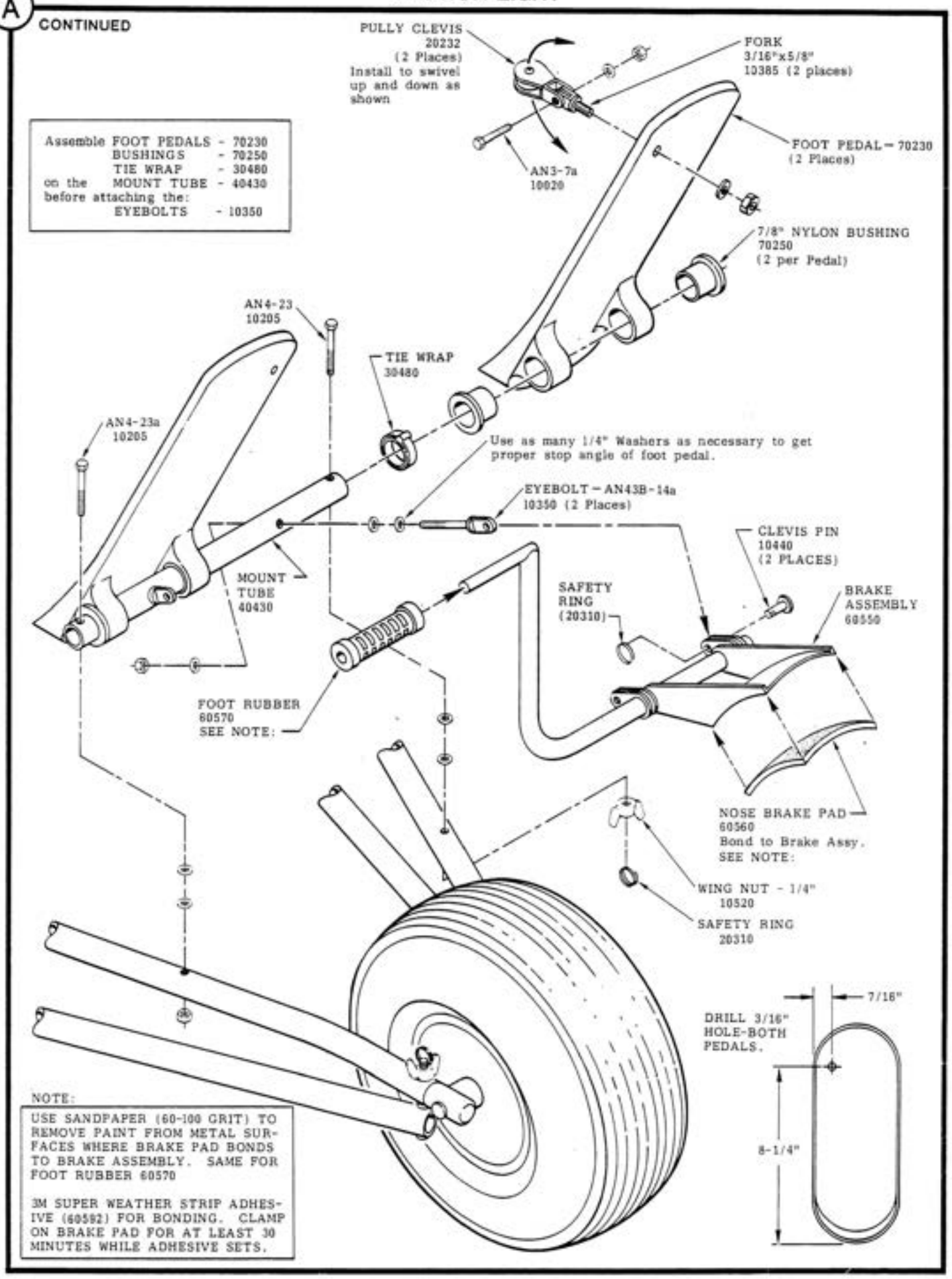

Assemble FOOT PEDALS - 70230
BUSHINGS - 70250
TIE WRAP - 30480
on the MOUNT TUBE - 40430
before attaching the:
EYEBOLTS - 10350

NOTE:

USE SANDPAPER (60-100 GRIT) TO REMOVE PAINT FROM METAL SURFACES WHERE BRAKE PAD BONDS TO BRAKE ASSEMBLY. SAME FOR FOOT RUBBER 60570

3M SUPER WEATHER STRIP ADHESIVE (60592) FOR BONDING. CLAMP ON BRAKE PAD FOR AT LEAST 30 MINUTES WHILE ADHESIVE SETS.

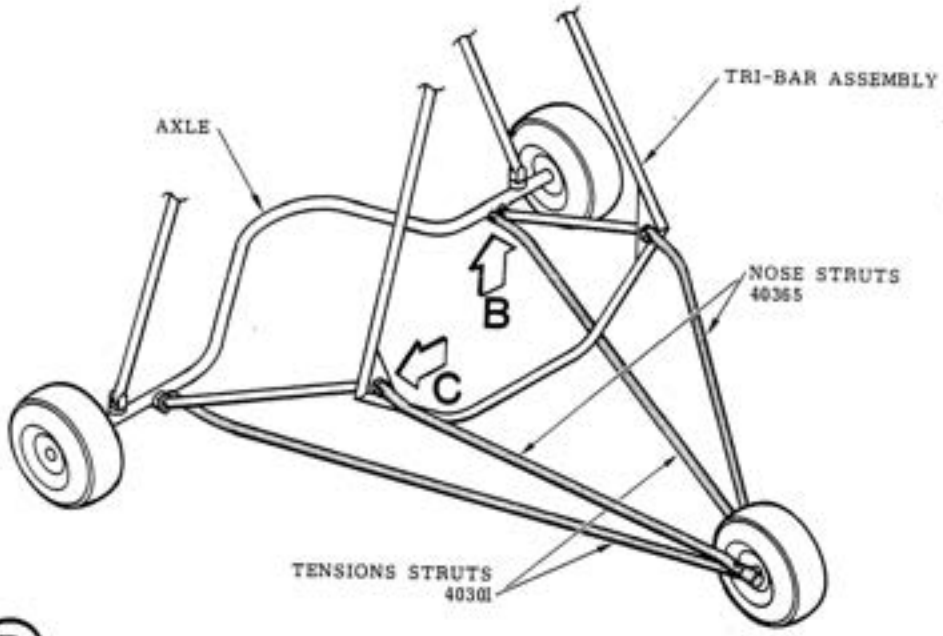
TRI-BAR ASSEMBLY
AXLE
NOSE STRUTS
40365
B
C
TENSIONS STRUTS
40301

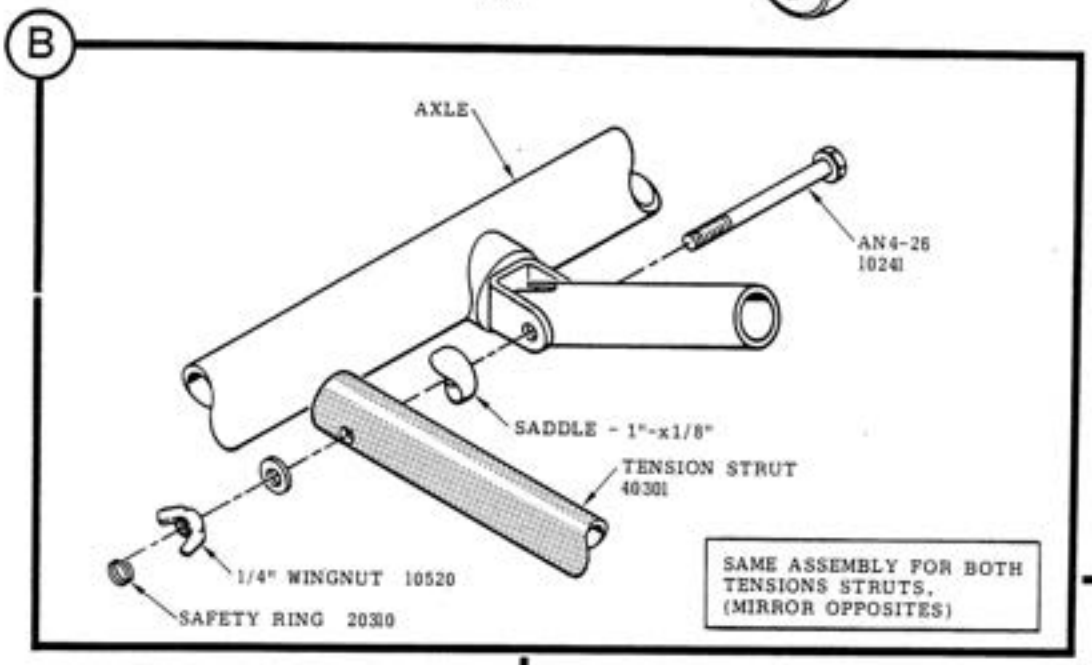
B
AXLE
AN4-26
10241
SADDLE - 1"-x1/8"
TENSION STRUT
40301
1/4" WINGNUT 10520
SAFETY RING 20310
SAME ASSEMBLY FOR BOTH
TENSIONS STRUTS,
(MIRROR OPPOSITES)

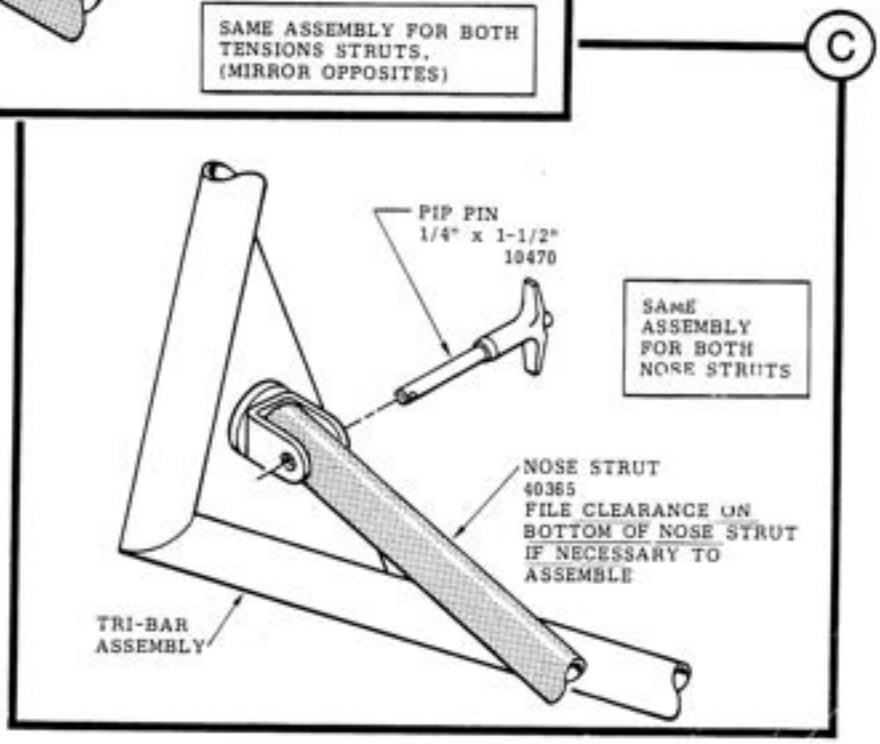
C
PIP PIN
1/4" x 1-1/2"
10470
SAME
ASSEMBLY
FOR BOTH
NOSE STRUTS
NOSE STRUT
40365
FILE CLEARANCE ON
BOTTOM OF NOSE STRUT
IF NECESSARY TO
ASSEMBLE
TRI-BAR
ASSEMBLY

D

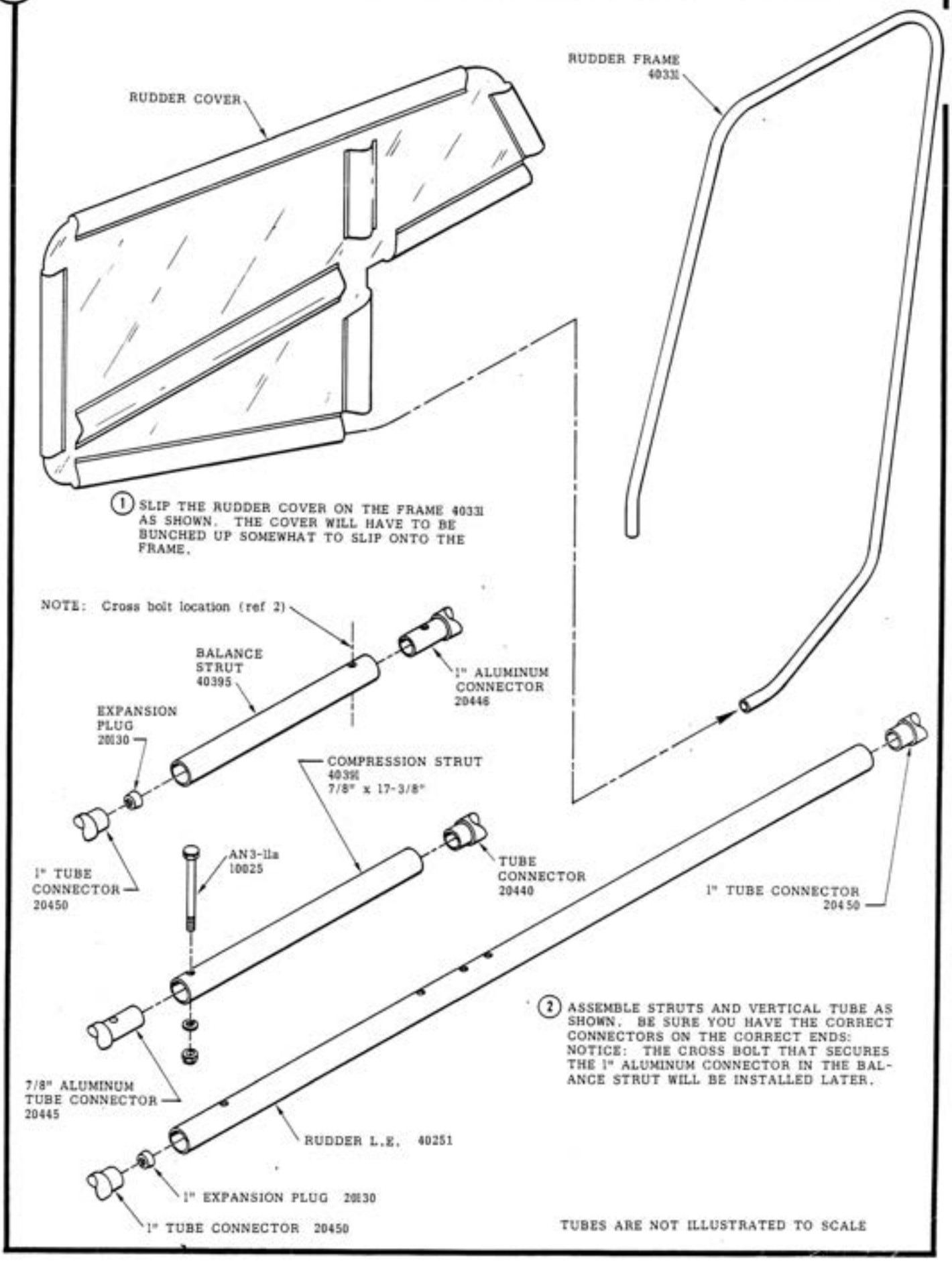
RUDDER COVER
RUDDER FRAME
40331
1 SLIP THE RUDDER COVER ON THE FRAME 40331 AS SHOWN. THE COVER WILL HAVE TO BE BUNCHED UP SOMEWHAT TO SLIP ONTO THE FRAME.
NOTE: Cross bolt location (ref 2)
BALANCE STRUT 40395
1" ALUMINUM CONNECTOR 20446
EXPANSION PLUG 20130
COMPRESSION STRUT 40391 7/8" x 17-3/8"
AN3-11a 10025
1" TUBE CONNECTOR 20450
TUBE CONNECTOR 20440
1" TUBE CONNECTOR 20450
2 ASSEMBLE STRUTS AND VERTICAL TUBE AS SHOWN. BE SURE YOU HAVE THE CORRECT CONNECTORS ON THE CORRECT ENDS: NOTICE: THE CROSS BOLT THAT SECURES THE 1" ALUMINUM CONNECTOR IN THE BALANCE STRUT WILL BE INSTALLED LATER.
7/8" ALUMINUM TUBE CONNECTOR 20445
RUDDER L.E. 40251
1" EXPANSION PLUG 20130
1" TUBE CONNECTOR 20450
TUBES ARE NOT ILLUSTRATED TO SCALE

D

CONTINUED

(3) SLIP RUDDER L.E. 40251 INTO POCKET WITH EYEBOLT HOLES AT BOTTOM.

(4) INSERT COMPRESSION STRUT 40391 INTO POCKET AND ATTACH FORWARD END AS SHOWN WITH BOLT 10400

(5) PUSH BOTTOM END OF RUDDER L.E. 40251 FORWARD (TAUT) AS INDICATED BY ARROW AND MARK LOCATION FOR THE ATTACH BOLT 10400. DRILL 1/4" DIA. HOLE IN THE RUDDER FRAME AND ATTACH BOTTOM END OF RUDDER L.E. 40251 WITH BOLT 10400.

(6) INSERT BALANCE STRUT 40395 IN POCKET AND ATTACH AFT END THRU PREDRILLED HOLE IN VERTICAL TUBE AS SHOWN. CUT AND HEAT-SEAL BOLT HOLE IN COVER ON THE UNDER SIDE OF BALANCE STRUT, AND INSTALL BOLT 10030 THRU TUBE CONNECTOR 20446. (SEE PREVIOUS PAGE)

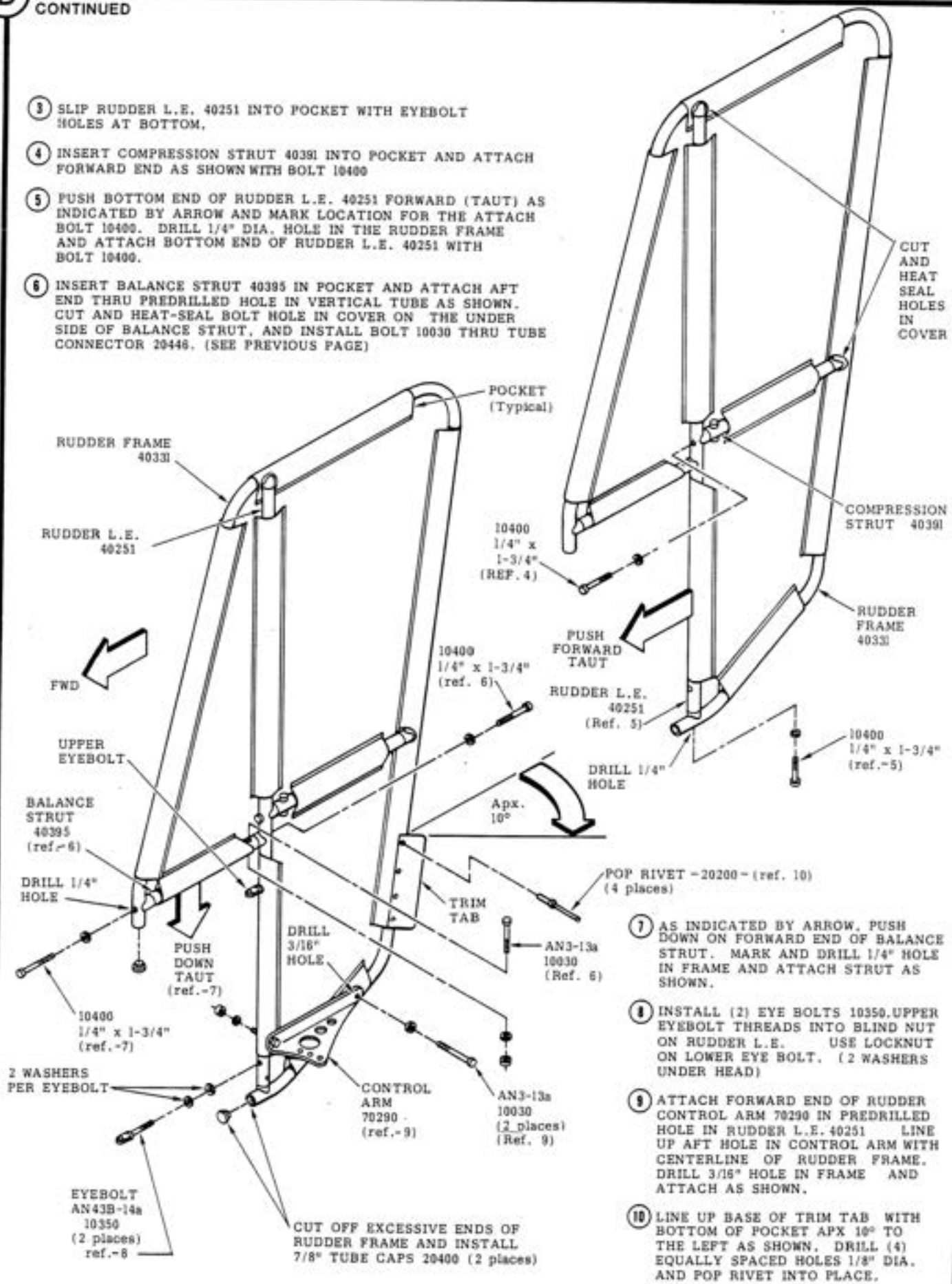

(7) AS INDICATED BY ARROW, PUSH DOWN ON FORWARD END OF BALANCE STRUT. MARK AND DRILL 1/4" HOLE IN FRAME AND ATTACH STRUT AS SHOWN.

(8) INSTALL (2) EYE BOLTS 10350.UPPER EYEBOLT THREADS INTO BLIND NUT ON RUDDER L.E. USE LOCKNUT ON LOWER EYE BOLT. (2 WASHERS UNDER HEAD)

(9) ATTACH FORWARD END OF RUDDER CONTROL ARM 70290 IN PREDRILLED HOLE IN RUDDER L.E. 40251 LINE UP AFT HOLE IN CONTROL ARM WITH CENTERLINE OF RUDDER FRAME. DRILL 3/16" HOLE IN FRAME AND ATTACH AS SHOWN.

(10) LINE UP BASE OF TRIM TAB WITH BOTTOM OF POCKET APX 10° TO THE LEFT AS SHOWN. DRILL (4) EQUALLY SPACED HOLES 1/8" DIA. AND POP RIVET INTO PLACE.

E

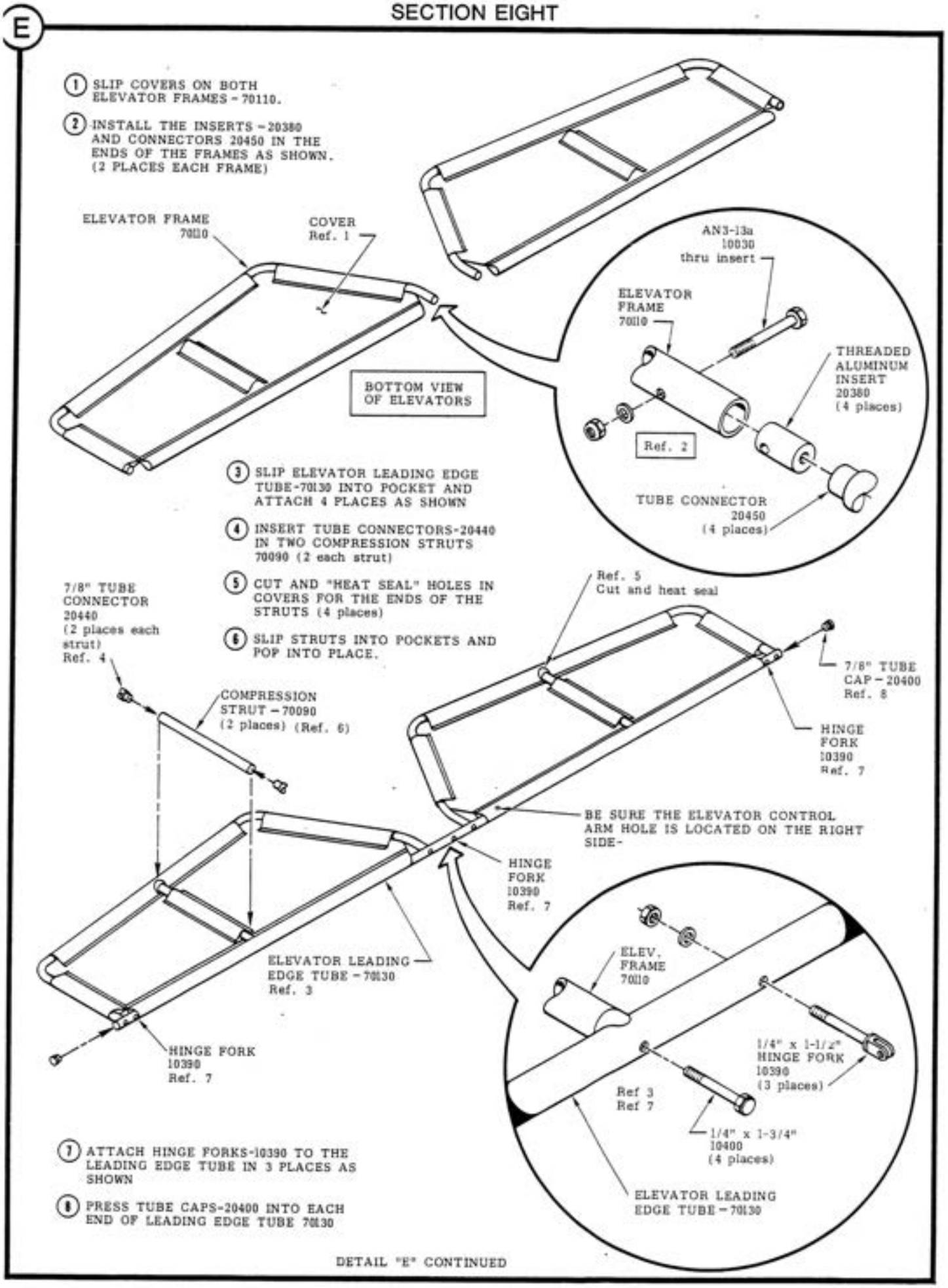

DETAIL "E" CONTINUED

E CONTINUED

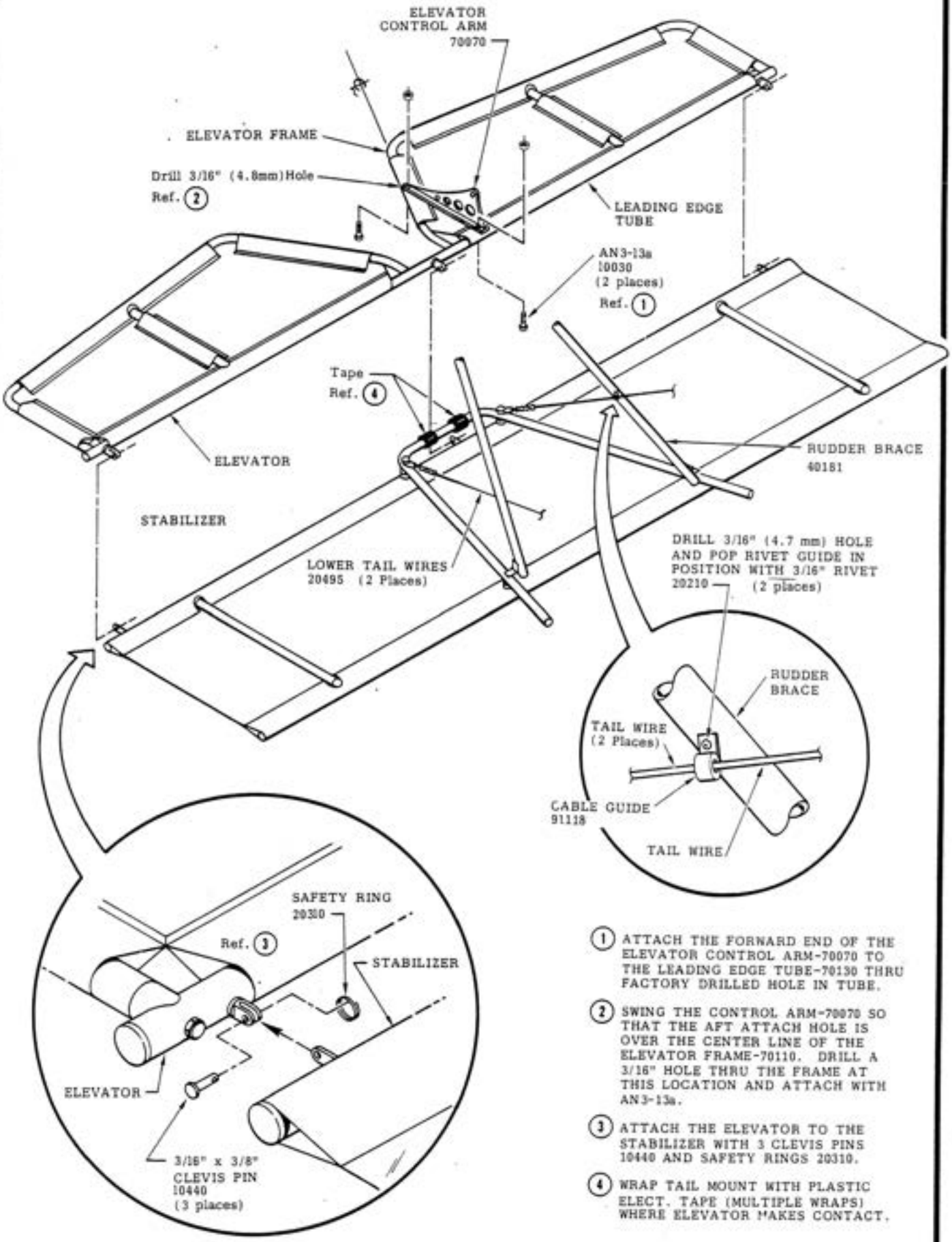

1. ATTACH THE FORWARD END OF THE ELEVATOR CONTROL ARM-70070 TO THE LEADING EDGE TUBE-70130 THRU FACTORY DRILLED HOLE IN TUBE.
2. SWING THE CONTROL ARM-70070 SO THAT THE AFT ATTACH HOLE IS OVER THE CENTER LINE OF THE ELEVATOR FRAME-70110. DRILL A 3/16" HOLE THRU THE FRAME AT THIS LOCATION AND ATTACH WITH AN3-13a.
3. ATTACH THE ELEVATOR TO THE STABILIZER WITH 3 CLEVIS PINS 10440 AND SAFETY RINGS 20310.
4. WRAP TAIL MOUNT WITH PLASTIC ELECT. TAPE (MULTIPLE WRAPS) WHERE ELEVATOR MAKES CONTACT.

F

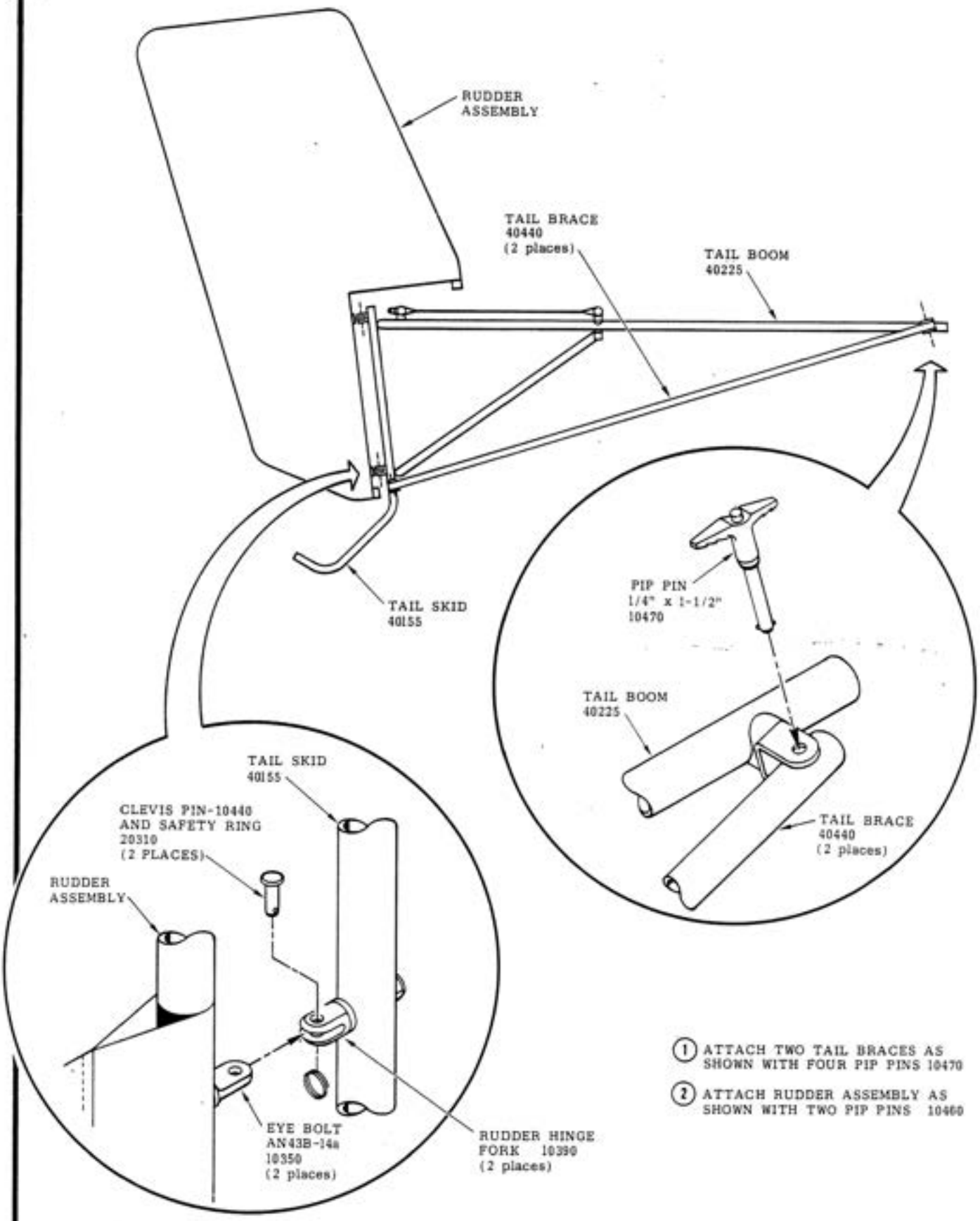

1. ATTACH TWO TAIL BRACES AS SHOWN WITH FOUR PIP PINS 10470
2. ATTACH RUDDER ASSEMBLY AS SHOWN WITH TWO PIP PINS 10460

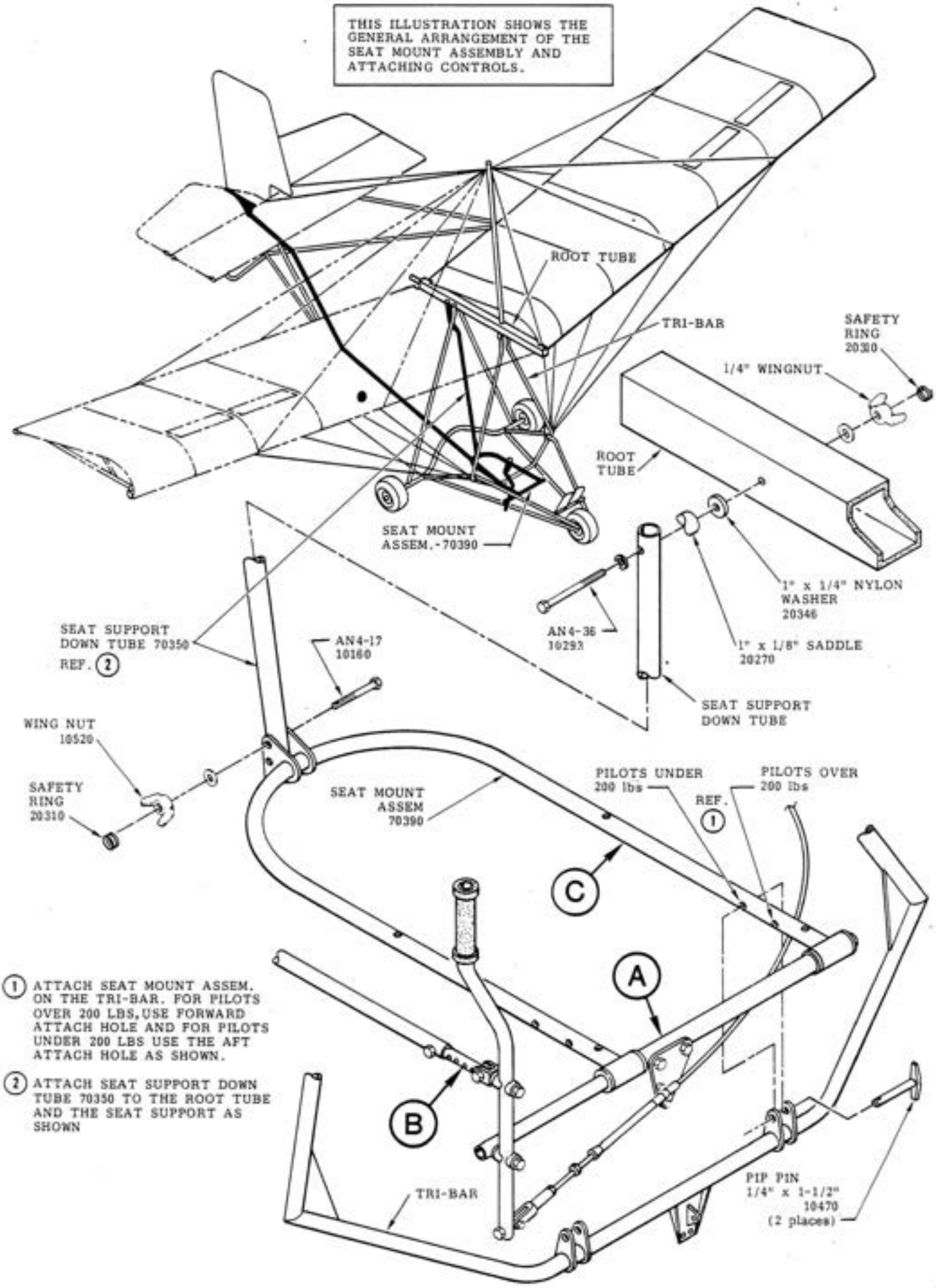

1 ATTACH SEAT MOUNT ASSEM. ON THE TRI-BAR. FOR PILOTS OVER 200 LBS, USE FORWARD ATTACH HOLE AND FOR PILOTS UNDER 200 LBS USE THE AFT ATTACH HOLE AS SHOWN.

2 ATTACH SEAT SUPPORT DOWN TUBE 70350 TO THE ROOT TUBE AND THE SEAT SUPPORT AS SHOWN

A

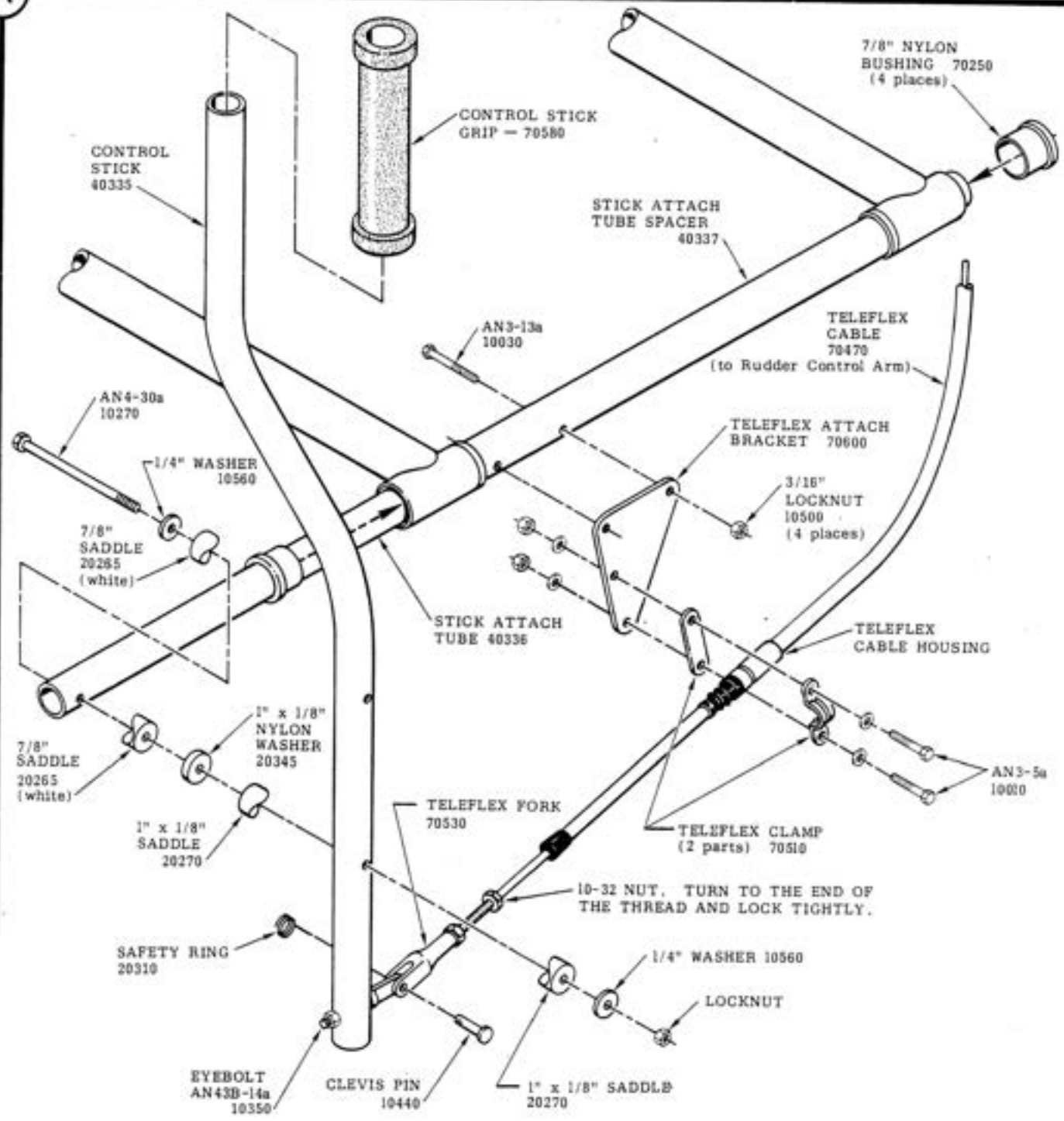

(1) INSTALL THE STICK ATTACH TUBE 40336, NYLON BUSHINGS 70250 AND THE STICK ATTACH TUBE SPACER 40337. APPLY DRY LUBE SO THAT THE TUBE TURNS FREELY IN THE BUSHINGS. GLUE THE TWO END BUSHINGS IN PLACE. THE TWO INSIDE BUSHINGS ARE LOCKED IN PLACE BY THE SPACER 40337.

(2) BE SURE THAT THE TAB IN THE TELEFLEX CLAMP 70510 SEATS IN THE UNDERCUT GROOVE IN THE TELEFLEX CABLE HOUSING

DETAIL "A" CONTINUED NEXT PAGE

A

CONTINUED

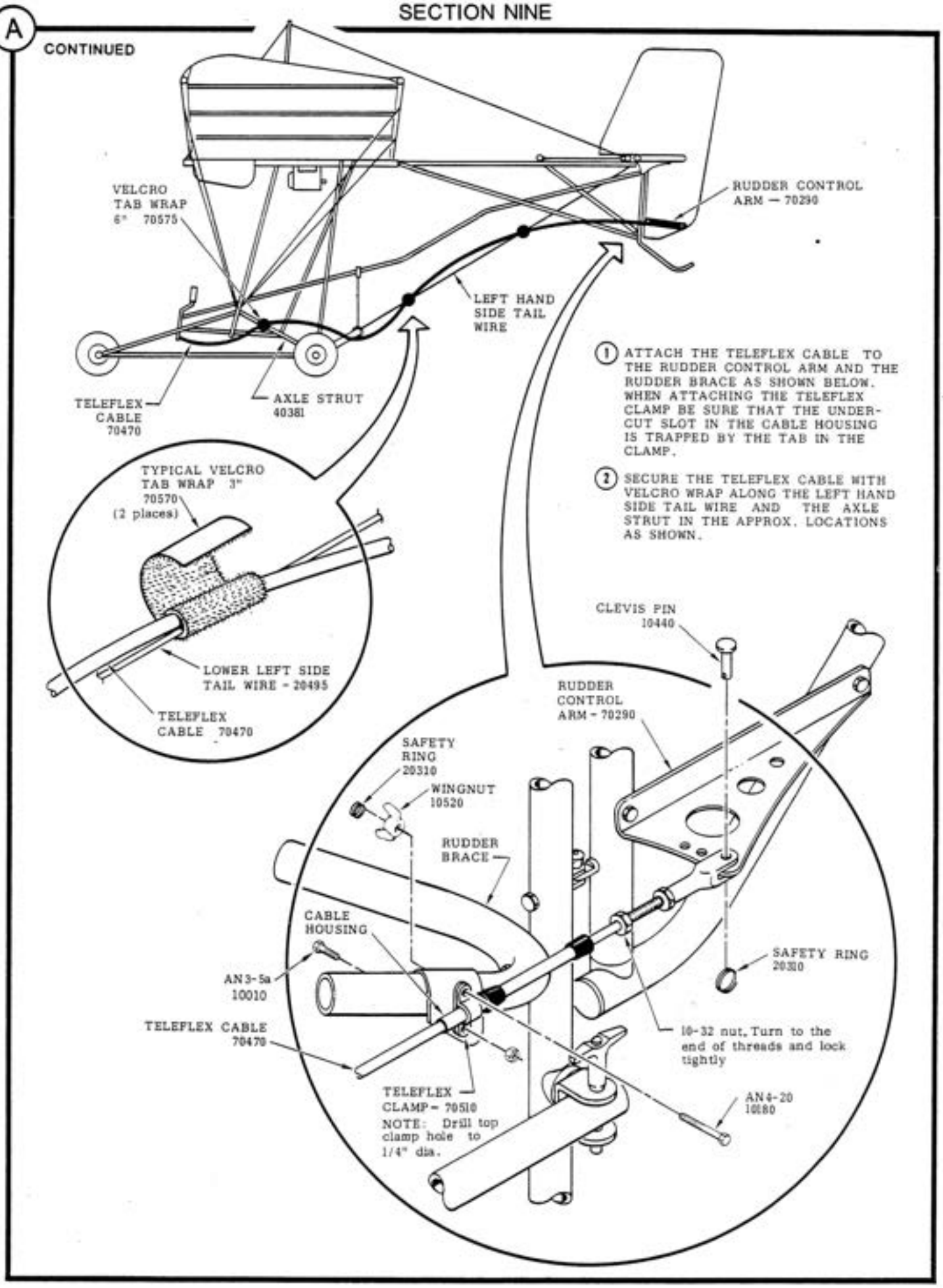

1. ATTACH THE TELEFLEX CABLE TO THE RUDDER CONTROL ARM AND THE RUDDER BRACE AS SHOWN BELOW. WHEN ATTACHING THE TELEFLEX CLAMP BE SURE THAT THE UNDER-CUT SLOT IN THE CABLE HOUSING IS TRAPPED BY THE TAB IN THE CLAMP.

2. SECURE THE TELEFLEX CABLE WITH VELCRO WRAP ALONG THE LEFT HAND SIDE TAIL WIRE AND THE AXLE STRUT IN THE APPROX. LOCATIONS AS SHOWN.

B

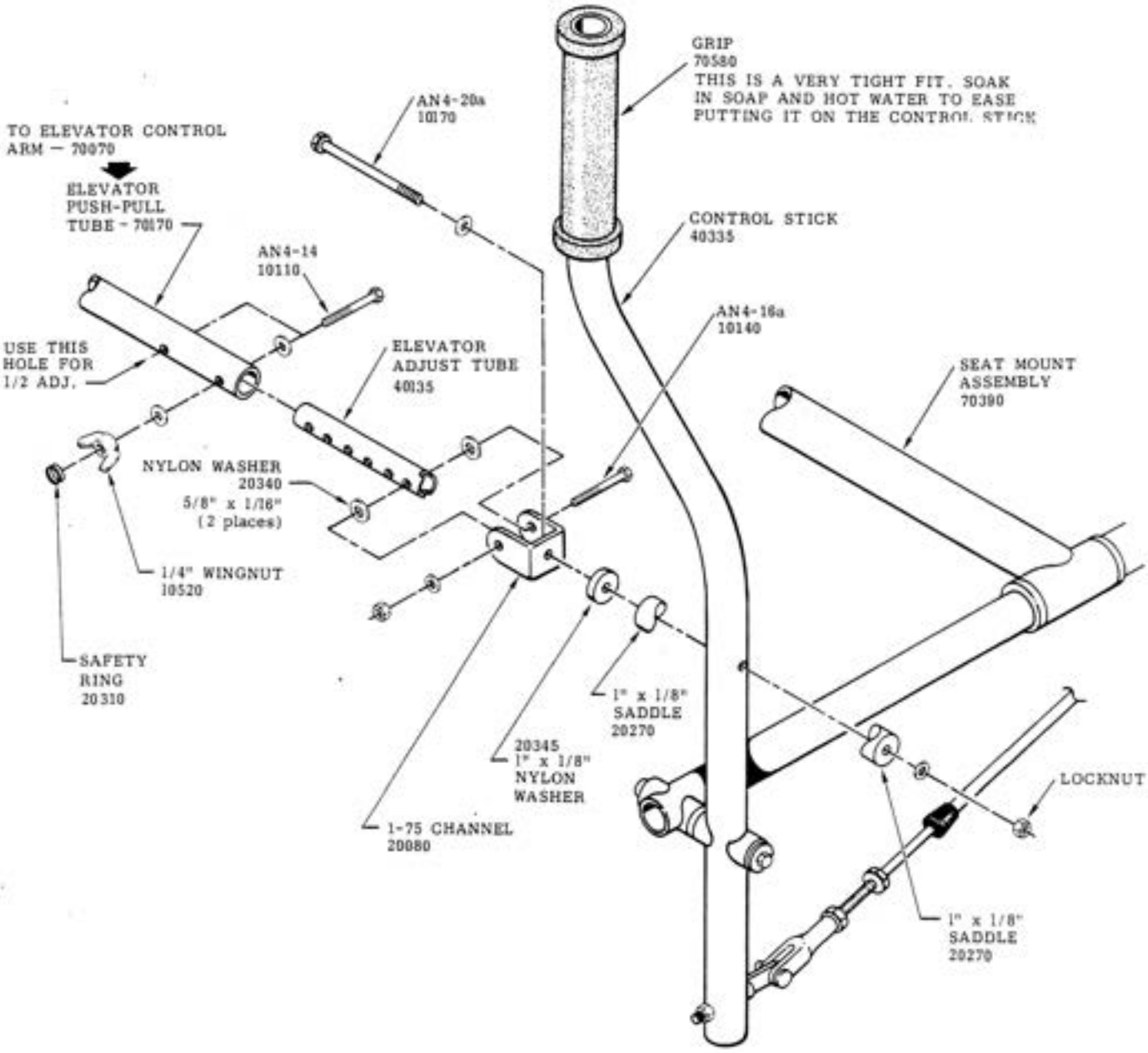

NOTE: FISH MOUTH FRONT END OF THE ELEVATOR ADJUST TUBE 40135 IN ORDER TO CLEAR THE 1-75 CHANNEL MOUNTING BOLT. THIS WILL ALLOW FULL TRAVEL OF THE ELEVATOR CONTROL ARM. (USE A RAT TAIL FILE).

DETAIL "B" CONTINUED NEXT PAGE

B

CONTINUED

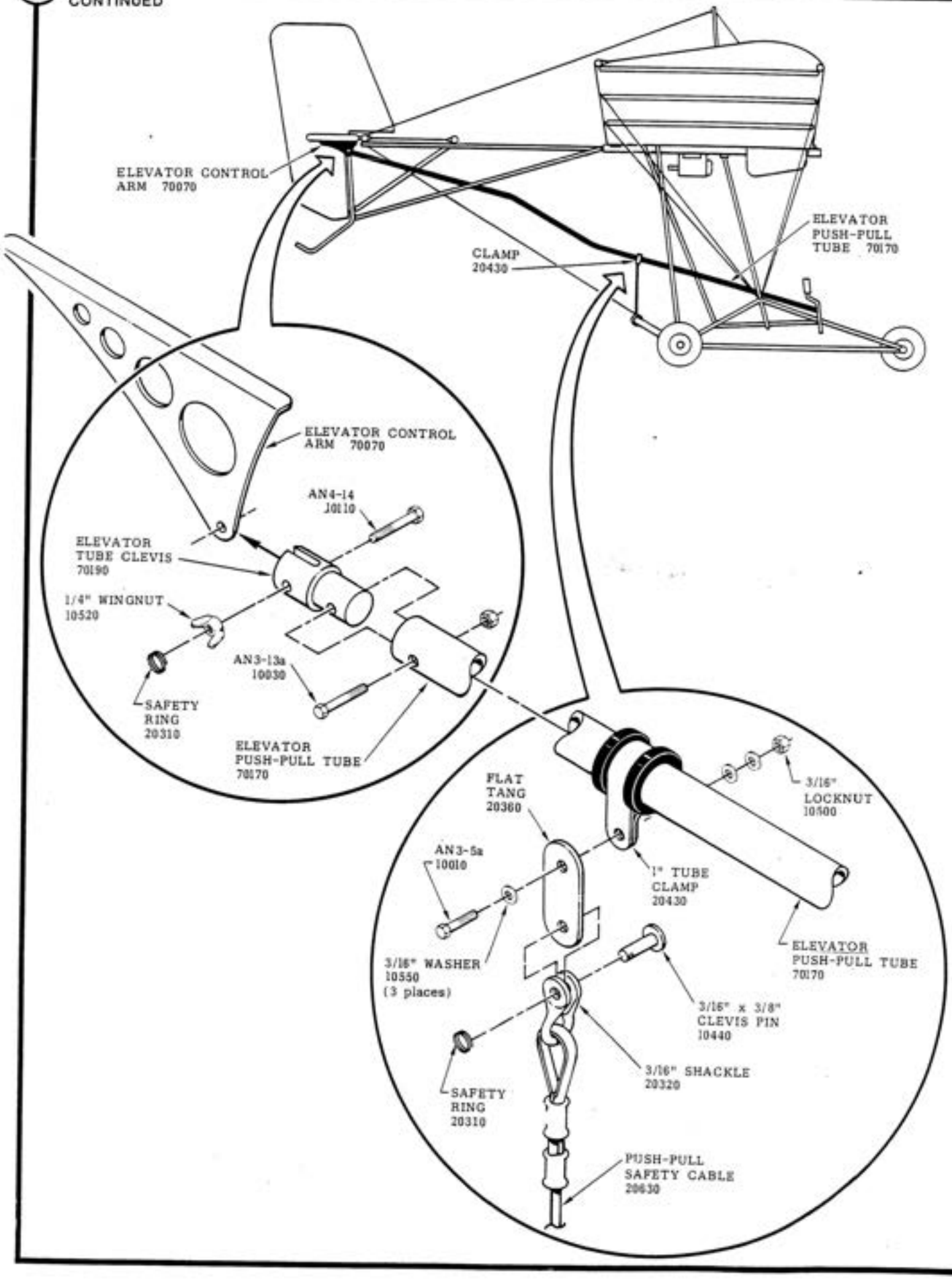
ELEVATOR CONTROL ARM 70070
CLAMP 20430
ELEVATOR PUSH-PULL TUBE 70170
ELEVATOR CONTROL ARM 70070
AN4-14 10110
ELEVATOR TUBE CLEVIS 70190
1/4" WINGNUT 10520
AN3-13a 10030
SAFETY RING 20310
ELEVATOR PUSH-PULL TUBE 70170
FLAT TANG 20360
3/16" LOCKNUT 10500
AN3-5a 10010
1" TUBE CLAMP 20430
ELEVATOR PUSH-PULL TUBE 70170
3/16" WASHER 10550 (3 places)
3/16" x 3/8" CLEVIS PIN 10440
3/16" SHACKLE 20320
SAFETY RING 20310
PUSH-PULL SAFETY CABLE 20630

C

1. CENTER THE SEAT ON THE SEAT MOUNT WITH THE FRONT EDGE OF THE SEAT 1/2" FORWARD OF THE FRONT EDGE OF THE SEAT MOUNT AS SHOWN BELOW.
2. CLAMP SECURELY IN THIS POSITION AND BACK DRILL THRU THE FOUR EXISTING ATTACH HOLES IN THE SEAT MOUNT WITH 1/4" DRILL.
3. ADD THE SEAT BELT ASSEMBLY AND ATTACH THE SEAT TO THE SEAT MOUNT AS SHOWN.
4. WRAP THE PERIMETER TO THE SEAT WITH THE DUCT TAPE AS SHOWN TO AVOID CUTS IN THE SEAT COVER.
5. INSTALL THE SEAT COVER.

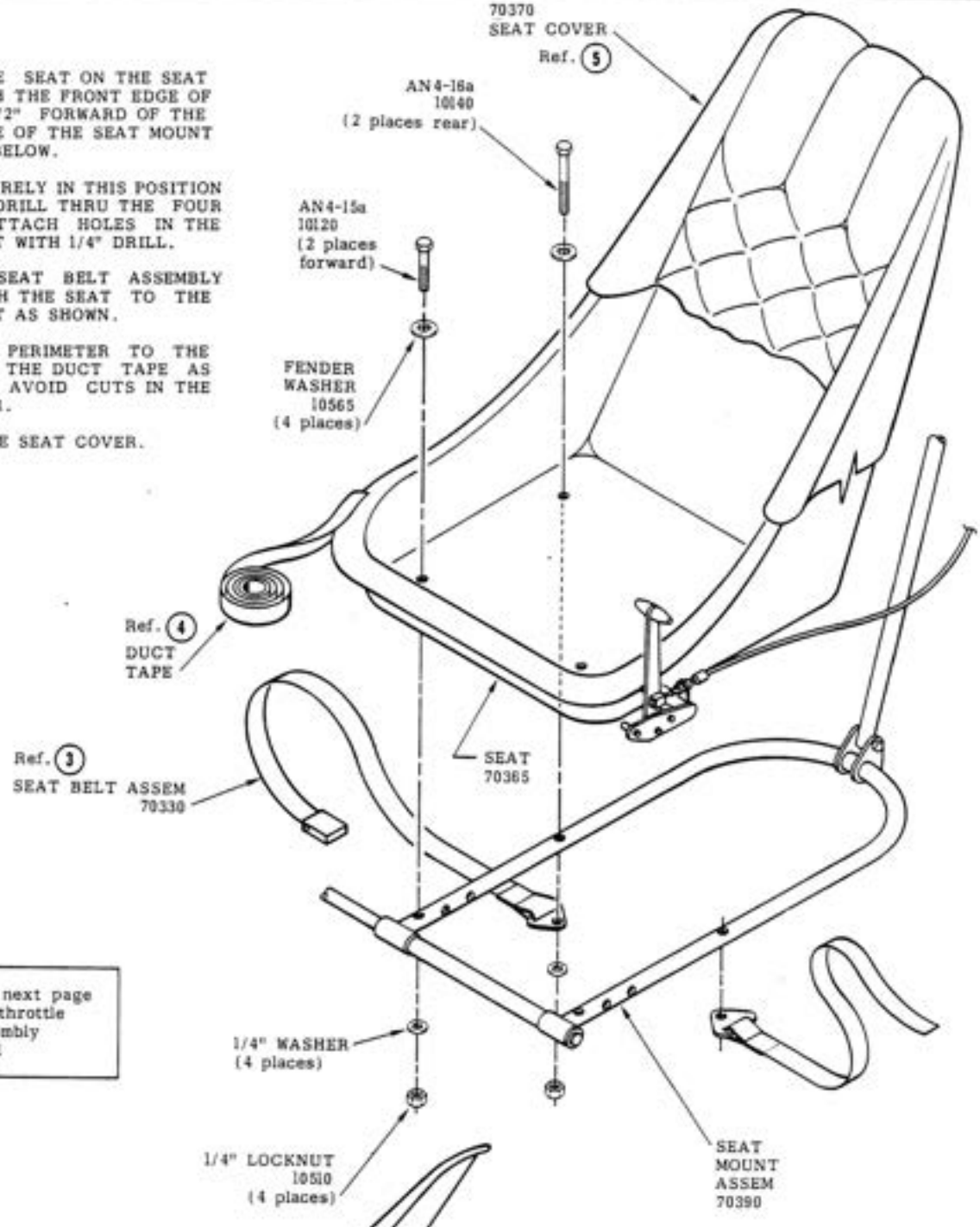

See next page for throttle assembly 91001

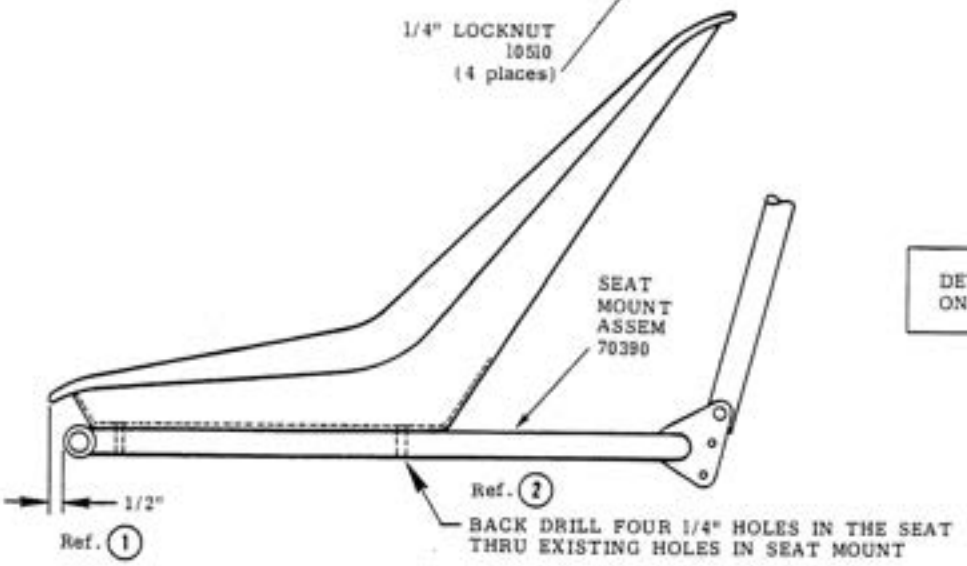

DETAIL "C" CONTINUED ON NEXT PAGE

C

CONTINUED

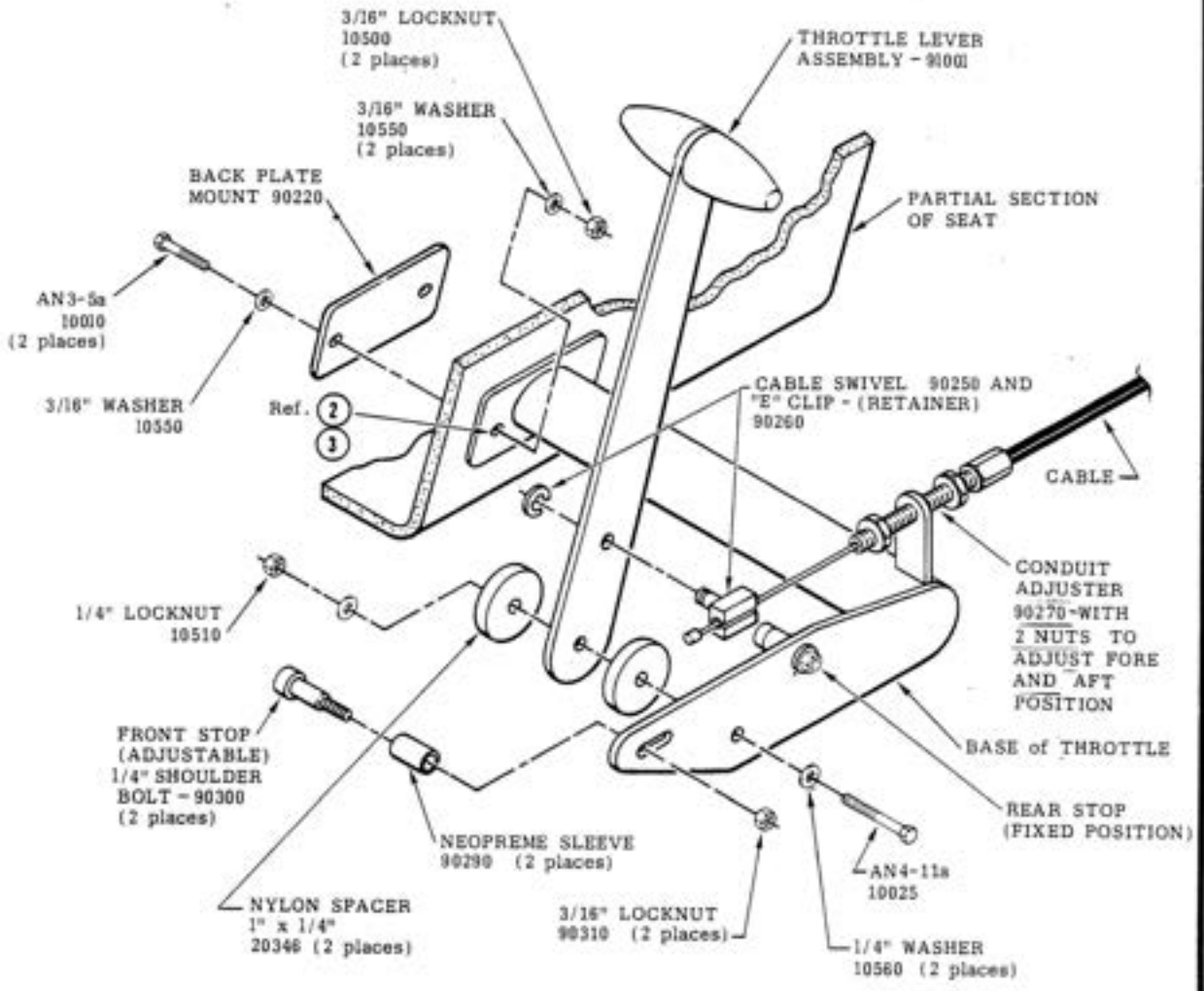

TO ATTACH THE THROTTLE ASSEMBLY TO THE SEAT:

1. DRILL ONE 3/16" HOLE IN THE SEAT (FORWARD HOLE) TO THE DIMENSIONS SHOWN BELOW.
2. ATTACH THE THROTTLE THRU THIS HOLE AND ALIGN THE BASE OF THE THROTTLE PARALLEL TO THE BOTTOM OF THE SEAT.
3. NOW DRILL THE SECOND 3/16" HOLE (REAR) BY BACK DRILLING THRU THE EXISTING ATTACH HOLE IN THE THROTTLE MOUNTING PLATE.
4. SECURELY ATTACH THE THROTTLE ASSEMBLY.

NOTE:

AFTER ASSEMBLY IS COMPLETED, ADJUST THE CABLE AS FOLLOWS:

PULL THE THROTTLE LEVER FULLY AFT. NOW PULL THE CONDUIT ADJUSTER AFT UNTIL THE CABLE WIRE IS TAUT. NOW LOCK THE ADJUSTER IN PLACE WITH THE 2 ADJUSTING NUTS. PUSH LEVER FORWARD AS FAR AS THE CABLE WILL GO. ADJUST AND LOCK FRONT STOP TO THIS LEVER POSITION

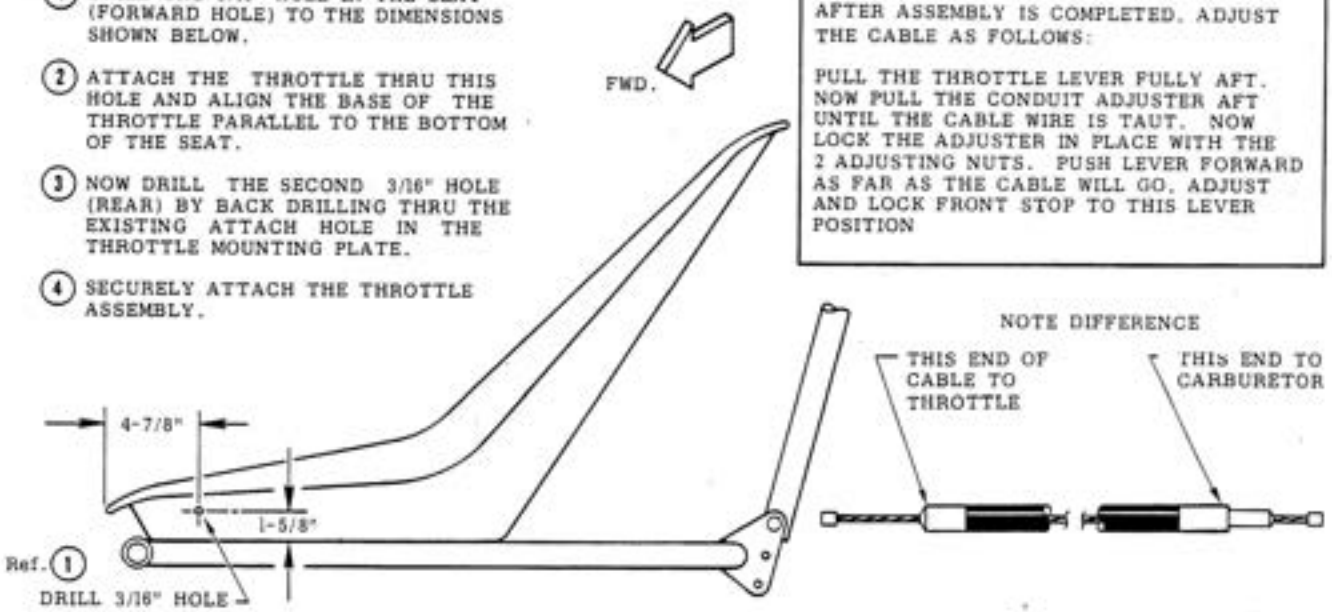

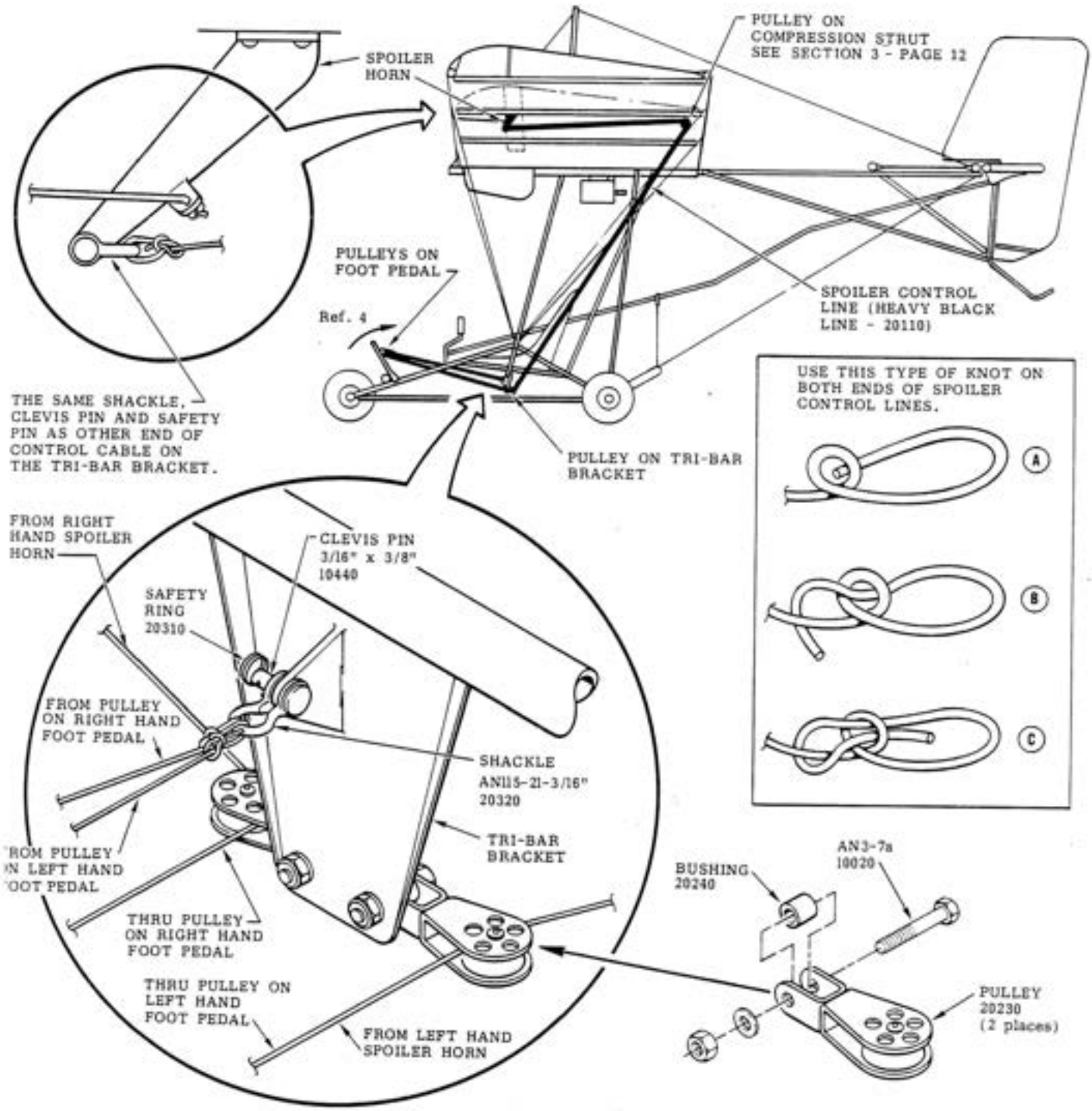

1. TIE ONE END OF THE SPOILER CONTROL CABLE (LINE) TO THE SHACKLE ON THE SPOILER HORN.
2. ROUTE THE LINE THRU THE PULLEY ON THE COMPRESSION STRUT. (SEE SECTION 5 - PAGE 24)
3. NOW RUN THE LINE DIRECTLY DOWN AND INBOARD THRU THE PULLEY ON THE TRI-BAR BRACKET. FROM THIS POINT TAKE THE LINE FORWARD THRU THE PULLEY ON THE FOOT PEDAL AND BACK TO THE SHACKLE ON THE TRI-BAR BRACKET.
4. WITH THE TIP OF THE FOOT PEDAL AS FAR BACK AS THE STOP ALLOWS, TAKE ALL THE SLACK OUT OF THE LINE AND TIE THE END OF THE LINE TO THE SHACKLE ON THE TRI-BAR BRACKET.
5. ATTACH BOTH RIGHT AND LEFT HAND SPOILER LINES IN THIS SAME MANNER.

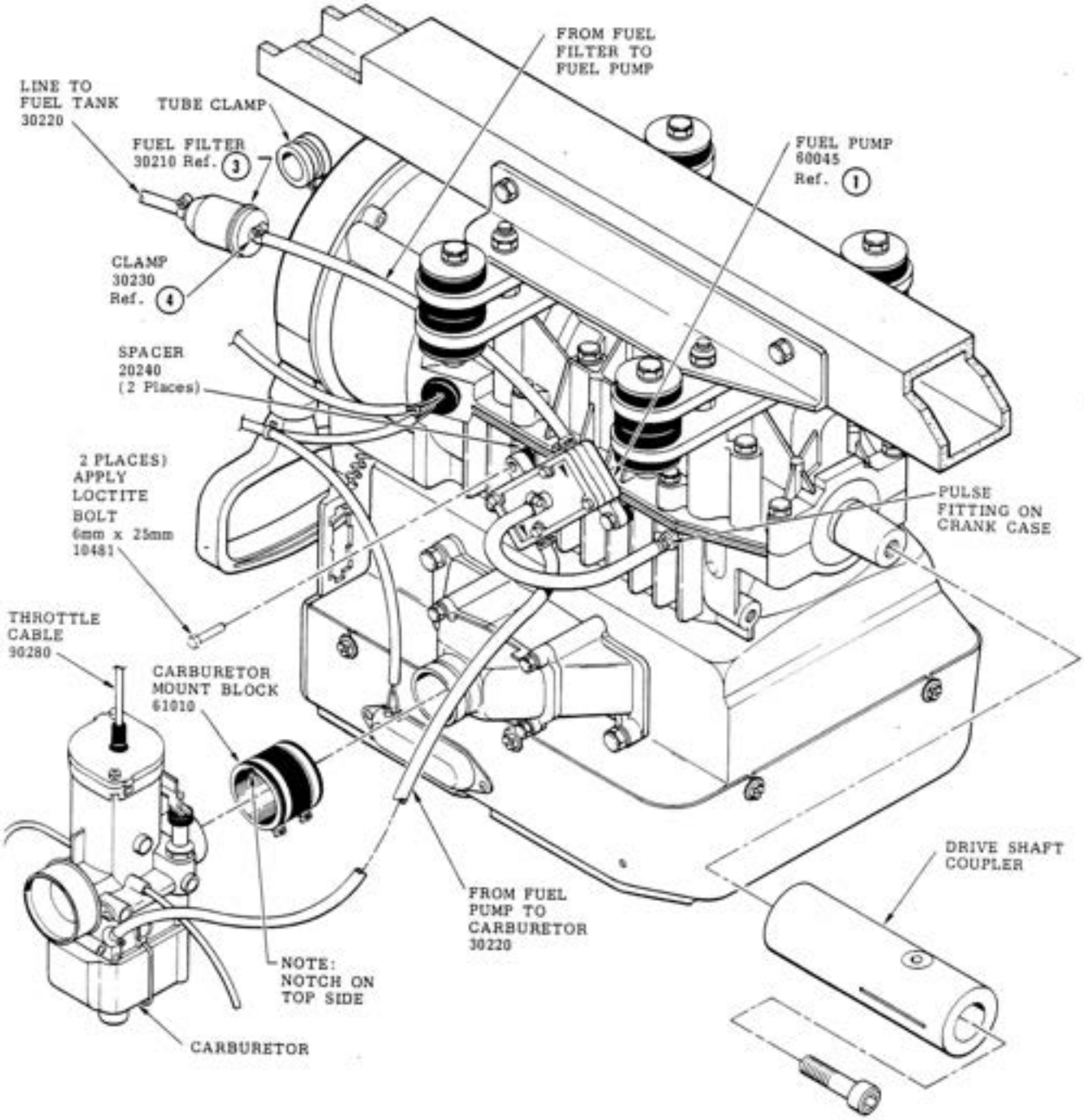

1. ATTACH THE CARBURETOR ASSEMBLY AND FUEL PUMP AS SHOWN. WHEN MOUNTING THE FUEL PUMP BE SURE THE FUEL FLOW DIRECTION IS CORRECT AS INDICATED BY THE ARROWS ON TOP OF THE PUMP.
2. ROUTE THE FILTER FUEL LINE AND ELECTRICAL WIRES THRU THE TUBE CLAMP AS SHOWN BACK ON PAGE FOUR.
3. INSTALL THE FUEL FILTER WITH THE TAPERED END TOWARDS THE FUEL TANK AND BE SURE ALL FUEL LINE ENDS ARE SECURED WITH CLAMPS 30230.
4. THE DRIVE SHAFT COUPLER IS INSTALLED AT THE FACTORY. IF FOR ANY REASON IT HAS TO BE REMOVED AT A LATER DATE FOR REPLACEMENT, ETC., BE SURE AND USE A SHAFT PULLER. DO NOT PRY AGAINST THE SHAFT, ENGINE FACE OR BEARING SEAL AS DAMAGE MAY OCCUR.

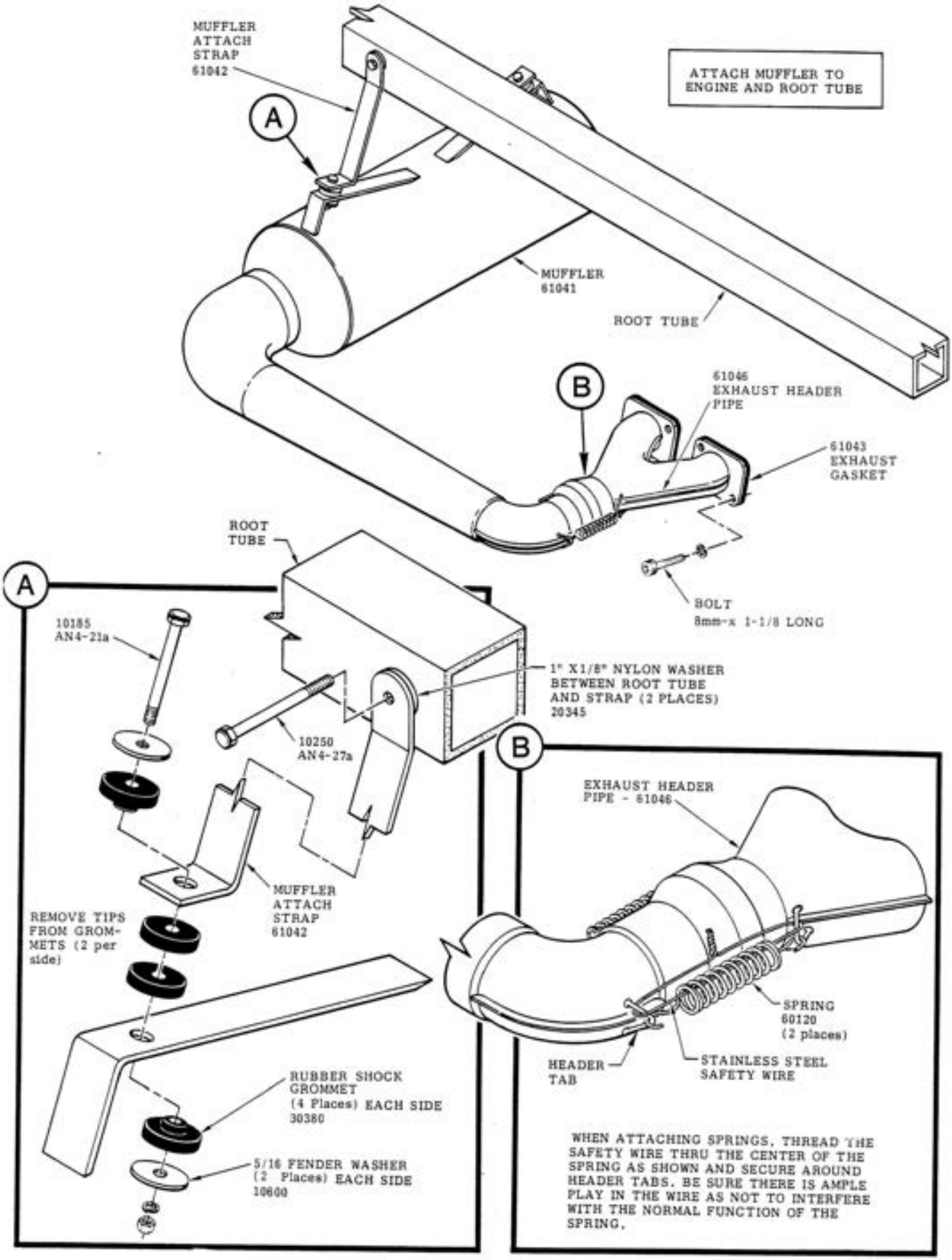
MUFFLER ATTACH STRAP 61042
A
ATTACH MUFFLER TO ENGINE AND ROOT TUBE
MUFFLER 61041
ROOT TUBE
B
61046 EXHAUST HEADER PIPE
61043 EXHAUST GASKET
BOLT 8mm-x 1-1/8 LONG
ROOT TUBE
A
10185 AN4-21a
1" X1/8" NYLON WASHER BETWEEN ROOT TUBE AND STRAP (2 PLACES) 20345
10250 AN4-27a
MUFFLER ATTACH STRAP 61042
REMOVE TIPS FROM GROMMETS (2 per side)
RUBBER SHOCK GROMMET (4 Places) EACH SIDE 30380
5/16 FENDER WASHER (2 Places) EACH SIDE 10600
B
EXHAUST HEADER PIPE - 61046
SPRING 60120 (2 places)
HEADER TAB
STAINLESS STEEL SAFETY WIRE
WHEN ATTACHING SPRINGS, THREAD THE SAFETY WIRE THRU THE CENTER OF THE SPRING AS SHOWN AND SECURE AROUND HEADER TABS. BE SURE THERE IS AMPLE PLAY IN THE WIRE AS NOT TO INTERFERE WITH THE NORMAL FUNCTION OF THE SPRING.

STUDY THIS GENERAL [illegible]EMENT THEN PROCEED
WITH THE INSTRUCTIONS ON THIS AND THE FOLLOWING 2 PAGES.

NOTE: MARK THE BELTS IN SEQUENCE (1-2-3-4)
AND ALWAYS RE-INSTALL IN THE SAME ORDER.

RECOMMENDED BELT TENSION:
DAYCO--3VX250 "Y" BELTS
8 LBS. INITIAL 30 MIN. BREAK-IN
5-6 LBS. AFTER BREAK-IN

GATES--3VX250 "V" BELTS
7 LBS. INITIAL 30 MIN. BREAK-IN
4-1/2 to 5-1/2 LBS. AFTER BREAK-IN

NOTE: THE BELTS COME IN MATCHED SETS.
IF DAMAGED REPLACE ALL FOUR BELTS.

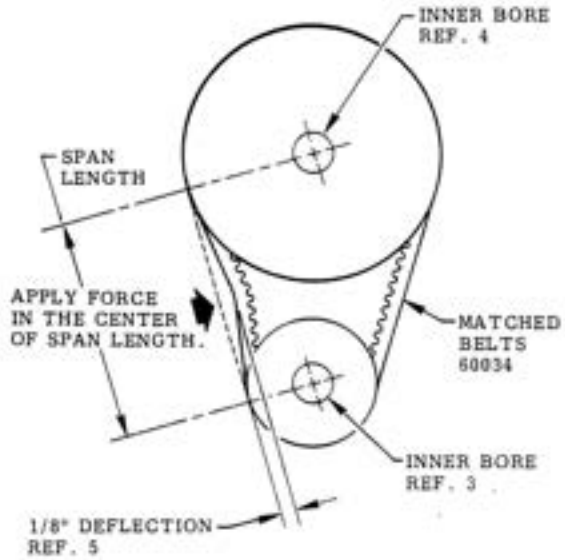

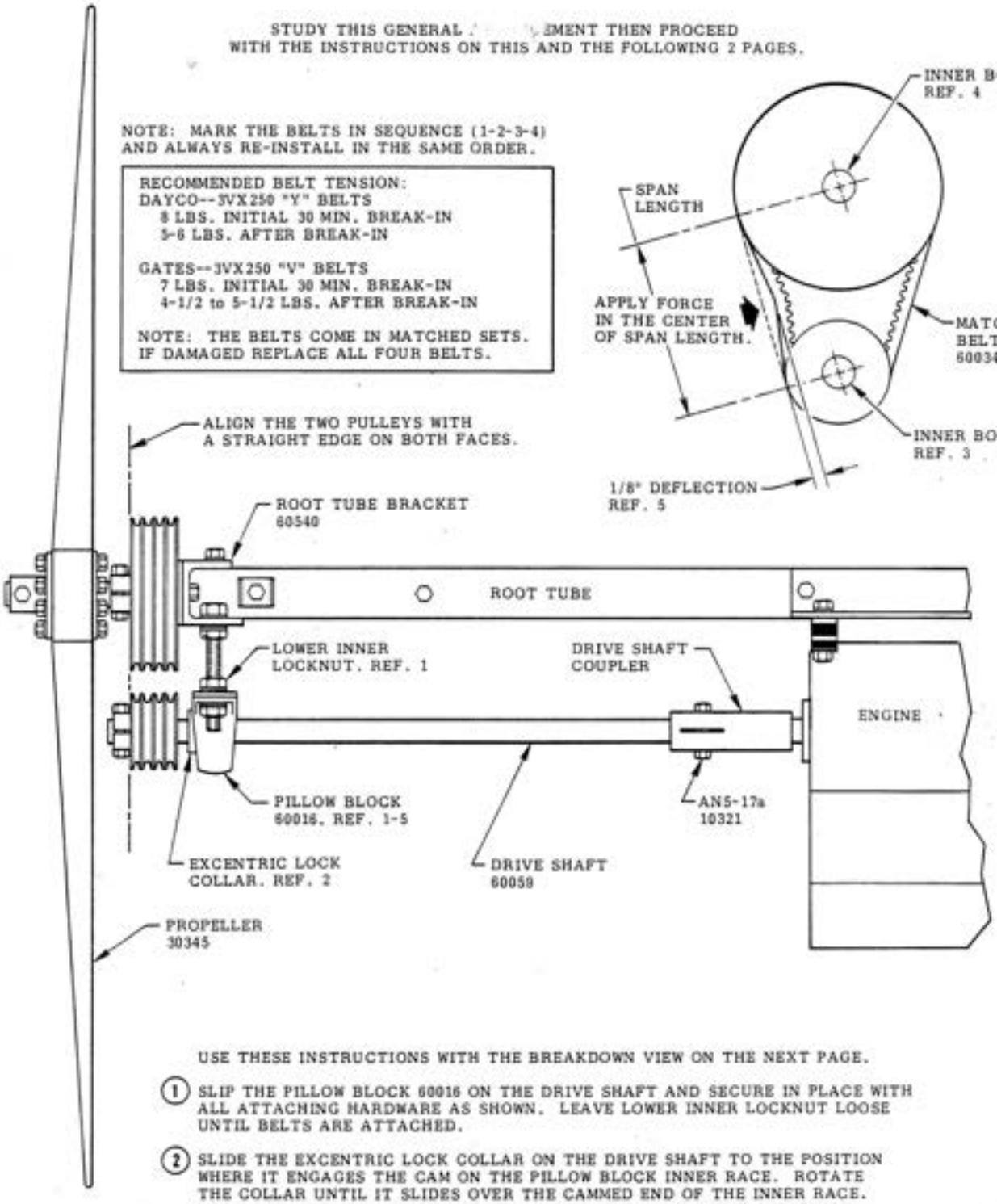

USE THESE INSTRUCTIONS WITH THE BREAKDOWN VIEW ON THE NEXT PAGE.

1. SLIP THE PILLOW BLOCK 60016 ON THE DRIVE SHAFT AND SECURE IN PLACE WITH ALL ATTACHING HARDWARE AS SHOWN. LEAVE LOWER INNER LOCKNUT LOOSE UNTIL BELTS ARE ATTACHED.

2. SLIDE THE EXCENTRIC LOCK COLLAR ON THE DRIVE SHAFT TO THE POSITION WHERE IT ENGAGES THE CAM ON THE PILLOW BLOCK INNER RACE. ROTATE THE COLLAR UNTIL IT SLIDES OVER THE CAMMED END OF THE INNER RACE. LOCK COLLAR BY TAPPING LIGHTLY WITH A DRIFT PIN IN THE DIRECTION OF SHAFT ROTATION AND TIGHTEN SET SCREW.

3. APPLY LOCTITE TO INNER BORE OF THE 3" PULLEY AND SLIDE IT ON THE DRIVE SHAFT. SECURE WITH 3 BOLTS: MOUNT THE CENTER BOLT IN THE OPPOSITE DIRECTION AS THE OUTSIDE BOLTS FOR PROPER BALANCE. TORQUE TO 140 INCH LBS.

4. APPLY LOCKTITE TO THE INNER BORE OF THE 6" PULLEY AND SLIDE IT ONTO THE PROP SHAFT. MOUNT BELTS AND ALIGN THE 2 PULLEYS WITH A STRAIGHT EDGE AS SHOWN. ATTACH 6" PULLEY WITH 2 BOLTS MOUNTED IN OPPOSITE DIRECTIONS (FOR BALANCE) AND TORQUE TO 140 INCE LBS.

5. ADJUST BELT TENSION AND LOCK PILLOW BLOCK IN PLACE.

CONTINUED ON NEXT PAGE.

SECTION TEN

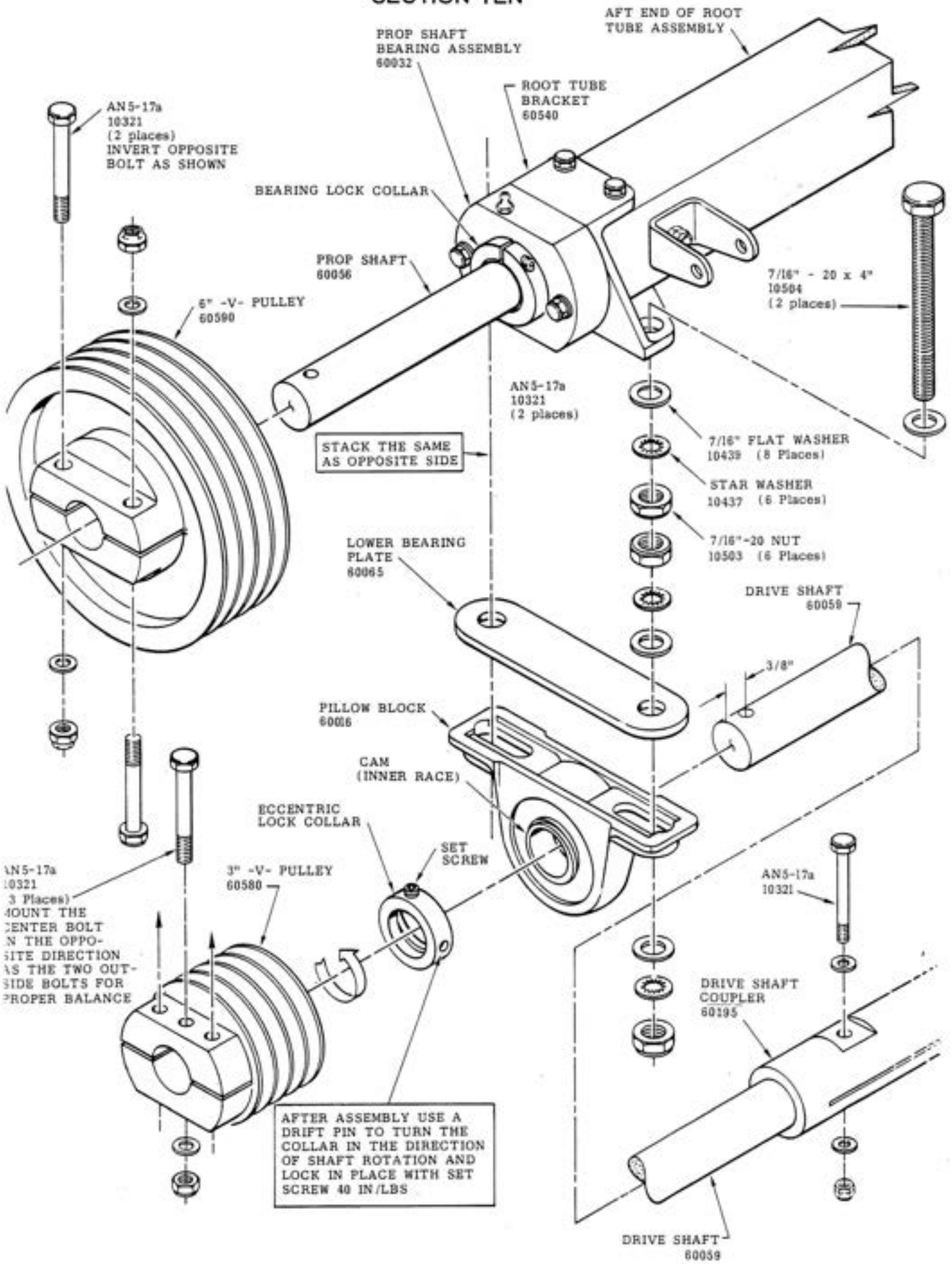
AFT END OF ROOT TUBE ASSEMBLY
PROP SHAFT BEARING ASSEMBLY 60032
ROOT TUBE BRACKET 60540
AN5-17a 10321 (2 places) INVERT OPPOSITE BOLT AS SHOWN
BEARING LOCK COLLAR
PROP SHAFT 60056
7/16" - 20 x 4" 10504 (2 places)
6" -V- PULLEY 60590
AN5-17a 10321 (2 places)
STACK THE SAME AS OPPOSITE SIDE
7/16" FLAT WASHER 10439 (8 Places)
STAR WASHER 10437 (6 Places)
7/16"-20 NUT 10503 (6 Places)
LOWER BEARING PLATE 60065
DRIVE SHAFT 60059
3/8"
PILLOW BLOCK 60066
CAM (INNER RACE)
ECCENTRIC LOCK COLLAR
SET SCREW
AN5-17a 10321 (3 Places) MOUNT THE CENTER BOLT IN THE OPPOSITE DIRECTION AS THE TWO OUTSIDE BOLTS FOR PROPER BALANCE
3" -V- PULLEY 60580
AN5-17a 10321
DRIVE SHAFT COUPLER 60195
AFTER ASSEMBLY USE A DRIFT PIN TO TURN THE COLLAR IN THE DIRECTION OF SHAFT ROTATION AND LOCK IN PLACE WITH SET SCREW 40 IN/LBS
DRIVE SHAFT 60059

TO CHECK THE RUNOUT ON THE PROP, MEASURE FROM A FIXED POINT ON THE TRAILING EDGE SPAR OR THE TAIL BOOM.

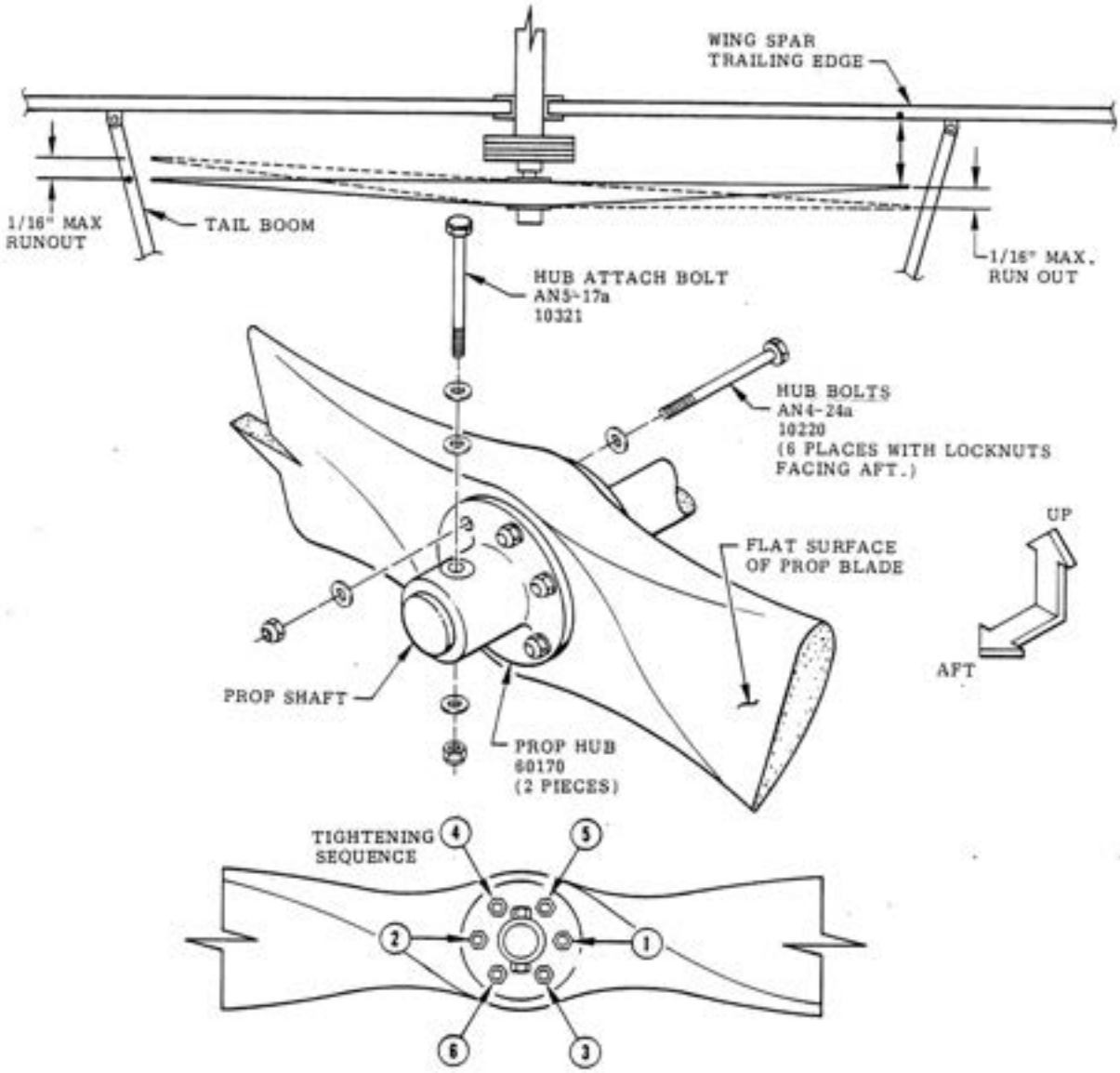

(1) ASSEMBLE THE PROP AND PROP HUB (2 PIECES) AS SHOWN AND MOUNT ON THE PROP SHAFT. BE SURE YOU HAVE THE FLAT SURFACE OF THE PROP BLADE FACING AFT.

(2) TORQUE THE HUB BOLTS, 10220 TO 30-50 IN. LBS. (6 PLACES)
TORQUE THE HUB ATTACH BOLT, 10321, TO 140 - 150 IN. LBS.
USE THE PROPER SEQUENCE, 1 THRU 6 AS SHOWN ABOVE WHEN TIGHTENING THE PROP BOLTS.
IF FOR ANY REASON YOU HAVE TO REMOVE THE HUB FROM THE SHAFT AT A LATER TIME, REPLACE THE LOCKNUT ON THE ATTACH BOLT 10321 WITH A NEW LOCKNUT.

(3) IF THE PROPELLOR HAS EXCESSIVE RUNOUT, TIGHTEN 3 BOLTS (10220 TOWARDS ONE TIP OR THE OTHER TO BRING BOTH TIPS INTO PROPER TRACK. USE A FIXED MARK ON THE WING SPAR OR TAIL BOOM TO MEASURE RUNOUT.

(4) NOTE:
AFTER THE PROP HUB HAS HAD A CHANCE TO "SEAT" ITSELF (24 HRS. OR MORE) RETIGHTEN THE HUB BOLTS 10220 WITH THE SAME PROCEDURE AS ABOVE.

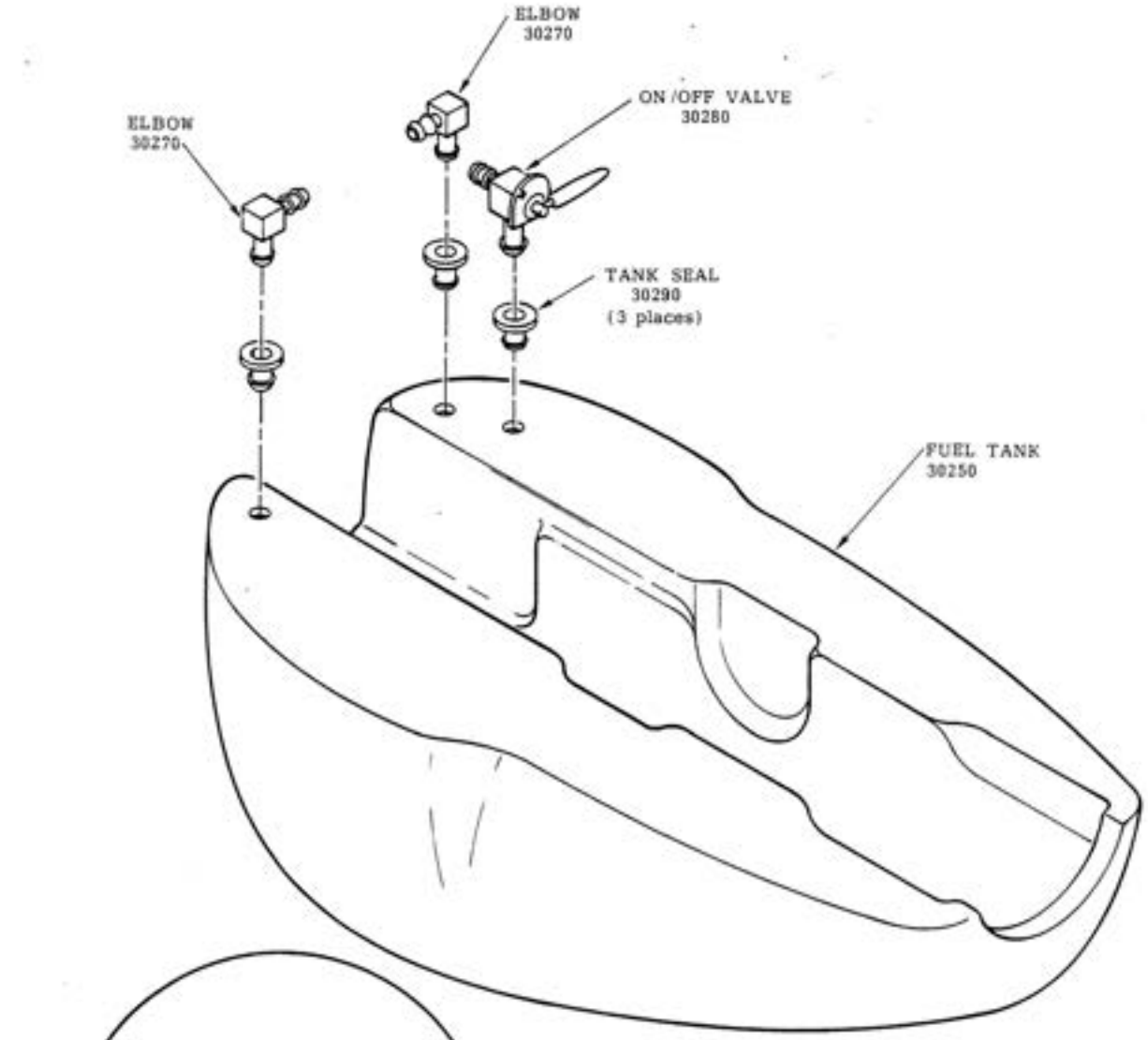

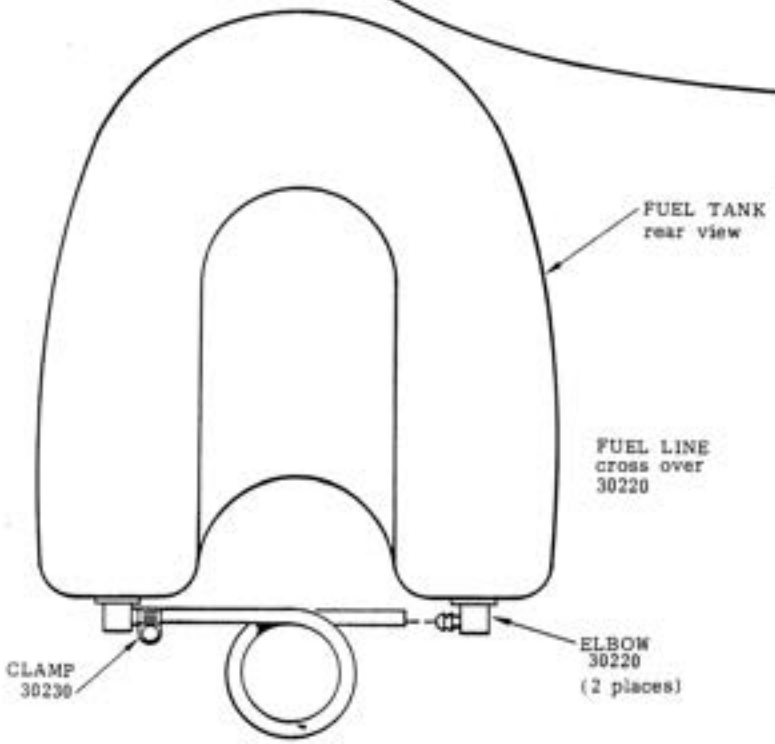

PUT A LOOP IN THE CROSS OVER FUEL LINE APX. AS SHOWN. THIS WILL GIVE YOU A VISUAL REFERANCE IF THERE IS WATER OR SEDIMATE IN THE FUEL.

1. INSERT THE VALVE, ELBOWS AND SEALS IN THE FUEL TANK IN THE POSITIONS SHOWN. USE OIL TO EASE THE INSTALLATION.

2. CLAMP ONE END OF THE CROSS OVER FUEL LINE TO ONE OF THE ELBOWS. AFTER THE FUEL TANK IS ATTACHED TO THE ROOT TUBE CLAMP ON THE OTHER END OF THE CROSS OVER FUEL LINE TO THE OPPOSITE ELBOW

SECTION TEN

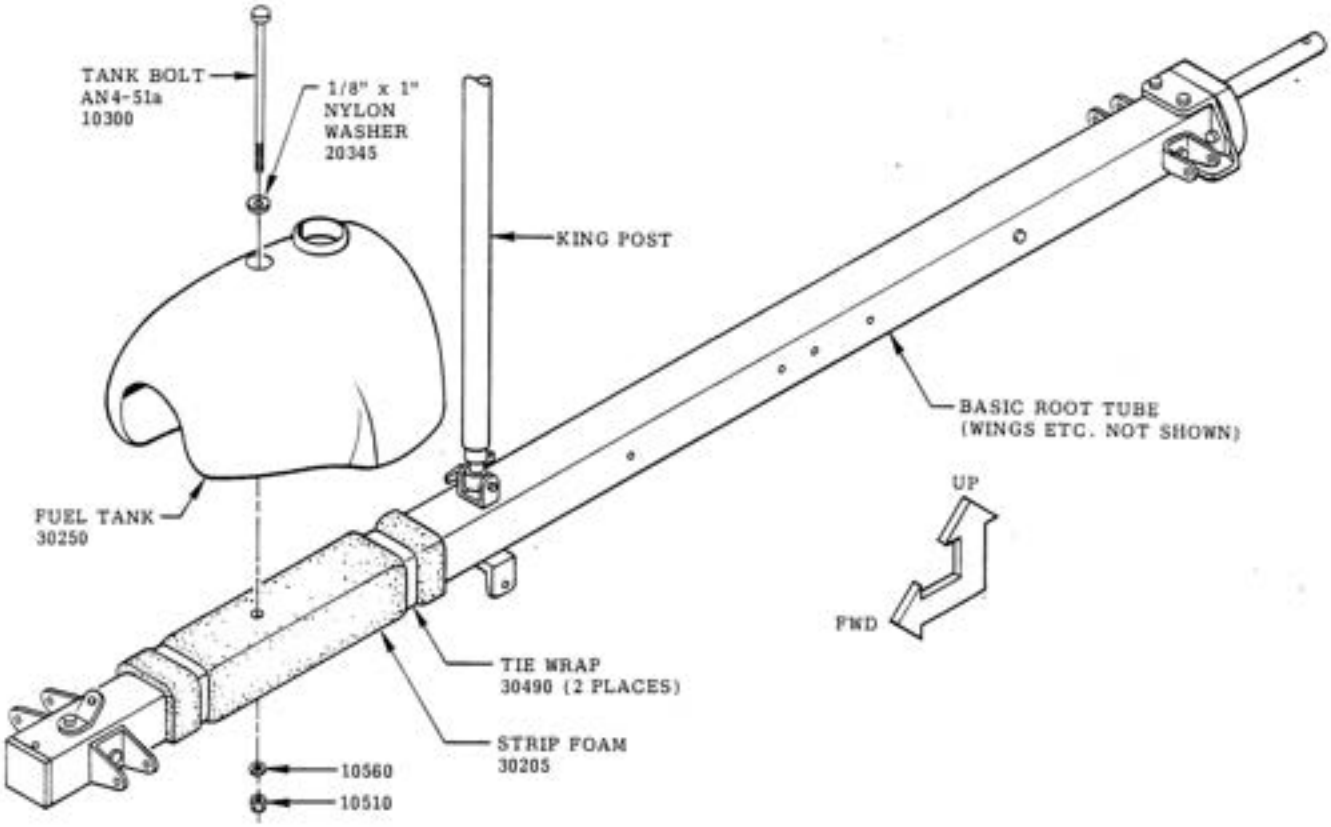

TO VISUALLY SIMPLIFY THE INSTALLATION OF THE GAS TANK. THE WINGS ETC ARE NOT SHOWN IN THE ABOVE ILLUSTRATION.

1. WRAP STRIP FOAM ON THE ROOT TUBE AS SHOWN AND SECURE WITH TWO TIE WRAPS.
2. CUT A HOLE IN THE STRIP FOAM TO ACCEPT THE TANK BOLT.
3. ATTACH TANK AS SHOWN AND CONNECT THE LOOSE END OF THE CROSS OVER FUEL LINE AS INDICATED ON PROCEDING PAGE.
4. ATTACH FUEL LINE WITH FILTER TO THE ON-OFF VALVE AND ROUTE THRU THE TUBE CLAMP AS SHOWN ON PAGE 4. CONNECT OTHER END TO THE FUEL PUMP (REF. PAGE 51)
5. BE SURE TO USE CLAMPS ON ALL FUEL LINE CONNECTIONS.

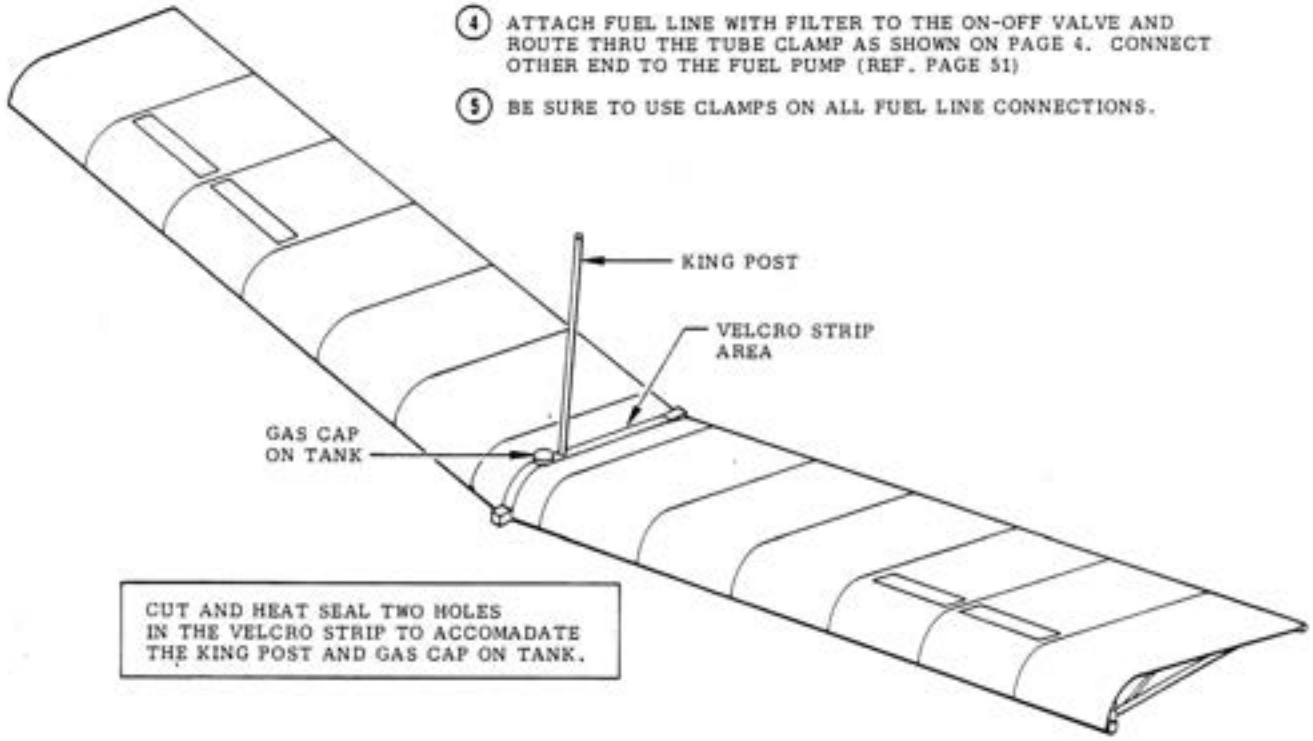

CUT AND HEAT SEAL TWO HOLES IN THE VELCRO STRIP TO ACCOMADATE THE KING POST AND GAS CAP ON TANK.

WING/STABILIZER INCIDENCE

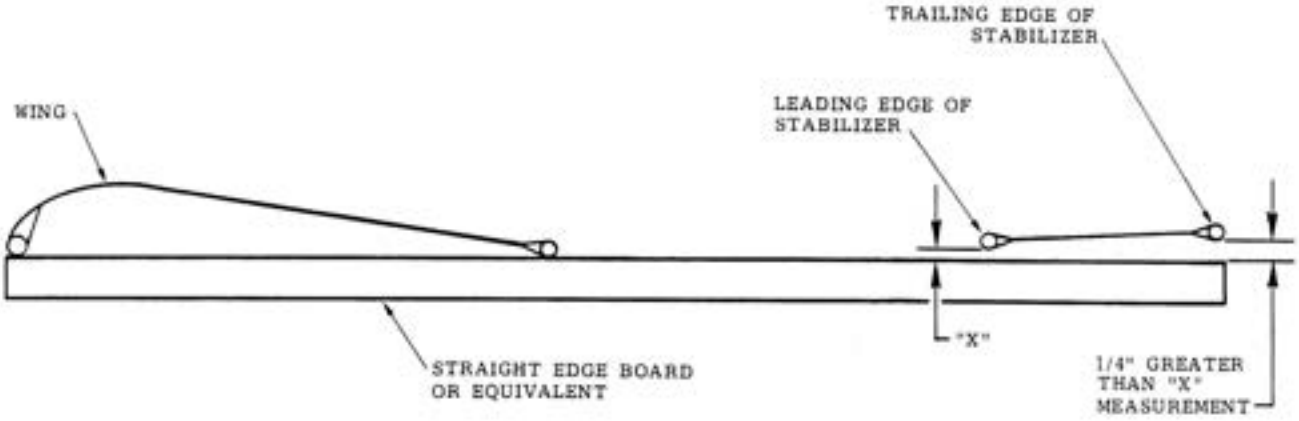

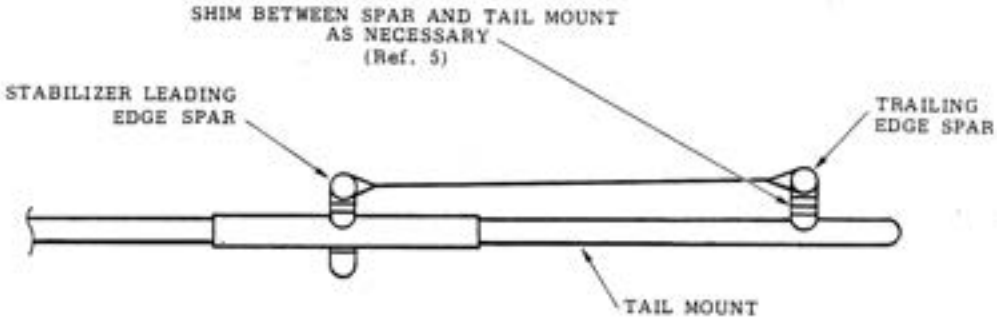

1. TO MEASURE THE INCIDENCE, WEIGHT THE NOSE WHEEL TO THE GROUND SO THAT THE UPPER TAIL WIRES ARE TAUT.
2. MAKE SURE THE KING POST IS ADJUSTED TO REMOVE ALL SLACK FROM WIRES.
3. PLACE A STRAIGHT EDGE ACROSS THE BOTTOM OF THE WING SPARS NEAR THE ROOT OF THE WING. THE STRAIGHT EDGE SHOULD LIGHTLY TOUCH BOTH SPARS AND CONTINUE BACK UNDER BOTH STABILIZER SPARS. (2 PEOPLE ON THIS OPERATION.)
4. STABILIZER TRAILING EDGE SHOULD BE 1/4" HIGHER THAN THE STABILIZER LEADING EDGE.
5. IF YOU DO NOT GET THE PROPER DIFFERENCE, IT WILL BE NECESSARY TO SHIM THE STABILIZER SPARS WITH WASHERS TO ACHIEVE THE PROPER ANGLE.
6. LONGER BOLTS (AN-40s) AND EXTRA 1/4" NYLON WASHERS ARE PROVIDED IN KIT FOR THIS.

NOTE:

DO NOT NEGLECT THIS PROCEDURE. IT HAS AN EFFECT ON FLIGHT PERFORMANCE.

WING WASHOUT

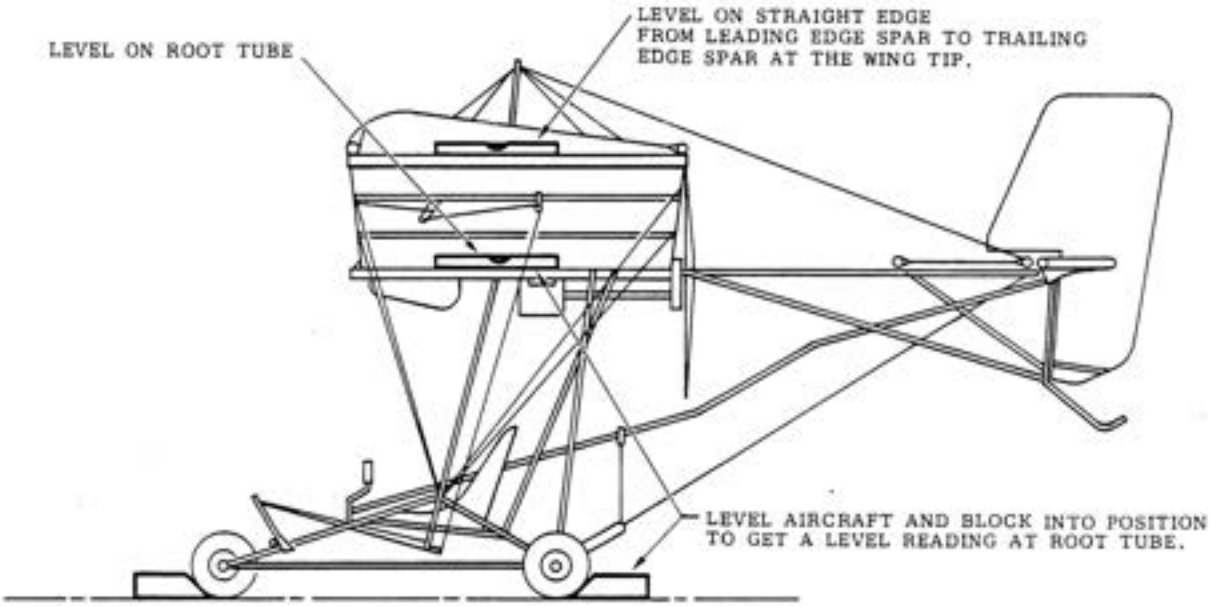

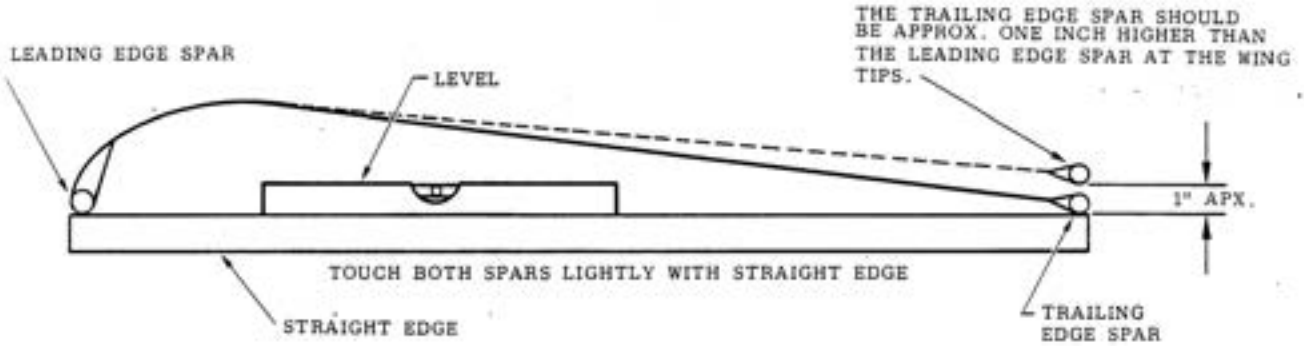

1. LEVEL AND BLOCK THE AIRCRAFT AS SHOWN ABOVE TO GET A LEVEL READING ACROSS THE ROOT TUBE FORWARD AND AFT.
2. USE SAME LEVEL ON A STRAIGHT EDGE TO GET READING AT WING TIPS FORWARD AND AFT. AS SHOWN ABOVE.

   CORRECT WING WASHOUT IS AN IMPORTANT FACTOR IN THE STALLING CHARACTERISTICS AND LOW SPEED HANDLING OF YOUR AIRCRAFT. WASHOUT IS SET AT THE FACTORY THROUGH PRECISE WIRE LENGTHS: HOWEVER, IT SHOULD BE CHECKED BEFORE FLIGHT TO BE CERTAIN THAT THE ANGLES ARE WITHIN FACTORY SPECIFICATIONS.
3. MAKE SURE THE KING POST IS ADJUSTED AND ALL THE SLACK IS OUT OF THE WIRES.
4. CHECK ALL WIRES FOR IMPROPER LOCATION, TWIST ETC.

WASHOUT AT THE TRAILING EDGE APX. 1"

IF PROBLEMS OCCUR FEEL FREE TO CONTACT YOUR DEALER.

UNDERSIDE VIEW OF RIB POCKET

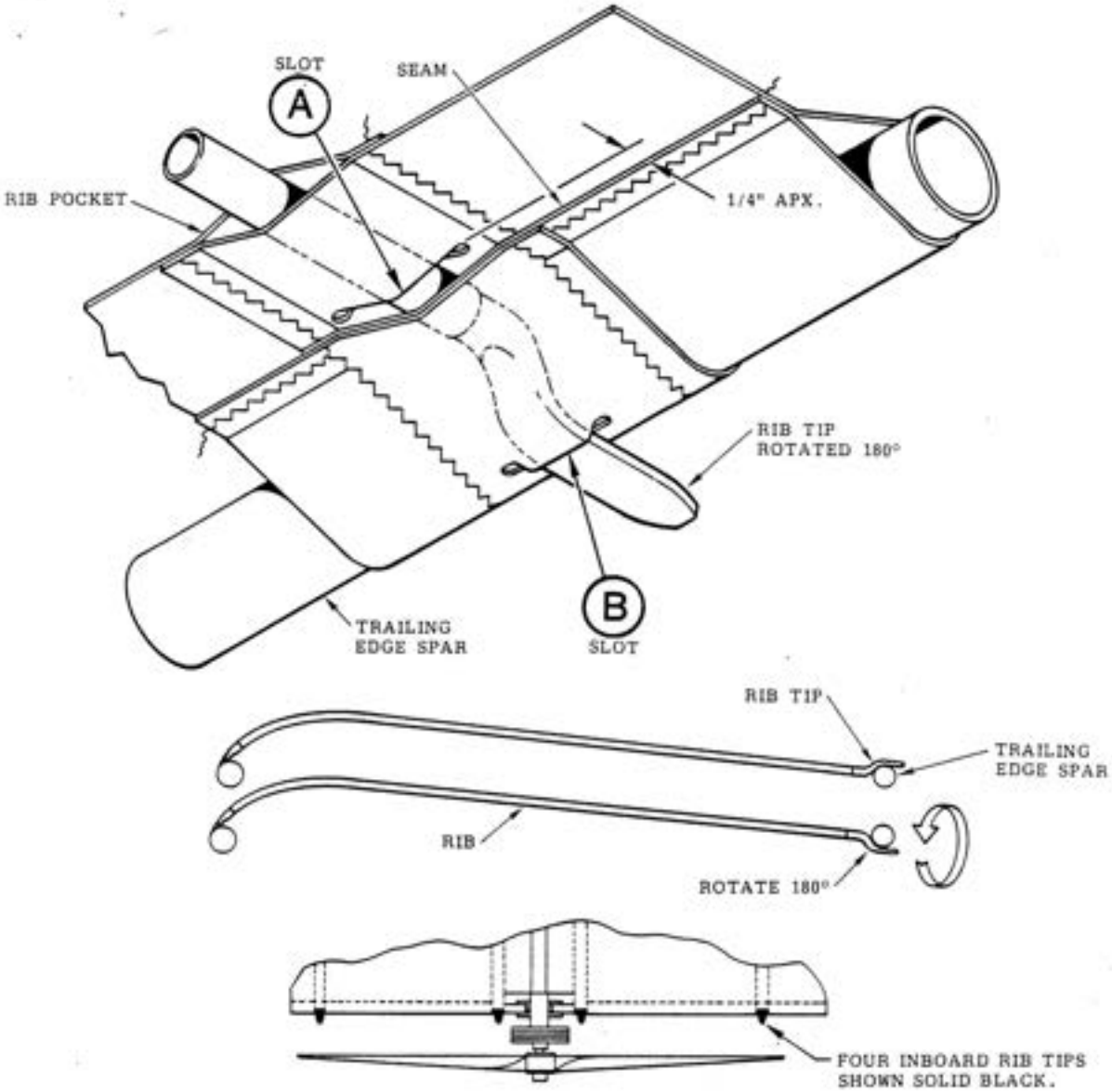

WITH RIB INSERTED IN RIB POCKET ON TOP SIDE OF WING, CUT AND HEAT SEAL TWO SLOTS IN THE RIB POCKET ON THE UNDERSIDE OF WING AS FOLLOWS.

1. CUT "A" THRU ONE LAYER OF CLOTH ONLY, APPROXIMATELY 1/4" FORWARD OF THE SEAM. CUT SLOT "B" 180° OPPOSITE ORIGINAL SLOT ON TOP SIDE OF SPAR. THRU TWO LAYERS OF CLOTH.
2. REMOVE RIB FROM POCKET AND TURN THE RIB TIP 180° AS SHOWN.
3. RE-INSTALL RIB THRU THE TWO NEW SLOTS SO THAT THE RIB TIP NOW RESTS ON THE BOTTOM OF THE TRAILING EDGE SPAR.
4. REPEAT THIS PROCEDURE ON THE 4 INBOARD RIBS.

THIS OPERATION WILL HELP TO KEEP THE 4 INBOARD RIBS FROM VIBRATING OUT OF THE RIB POCKETS AND INTO THE PROPELLAR. ANOTHER METHOD IS TO DRILL A SMALL HOLE IN THE TIP END AND SAFETY WIRE IT TO THE TRAILING EDGE SPAR.

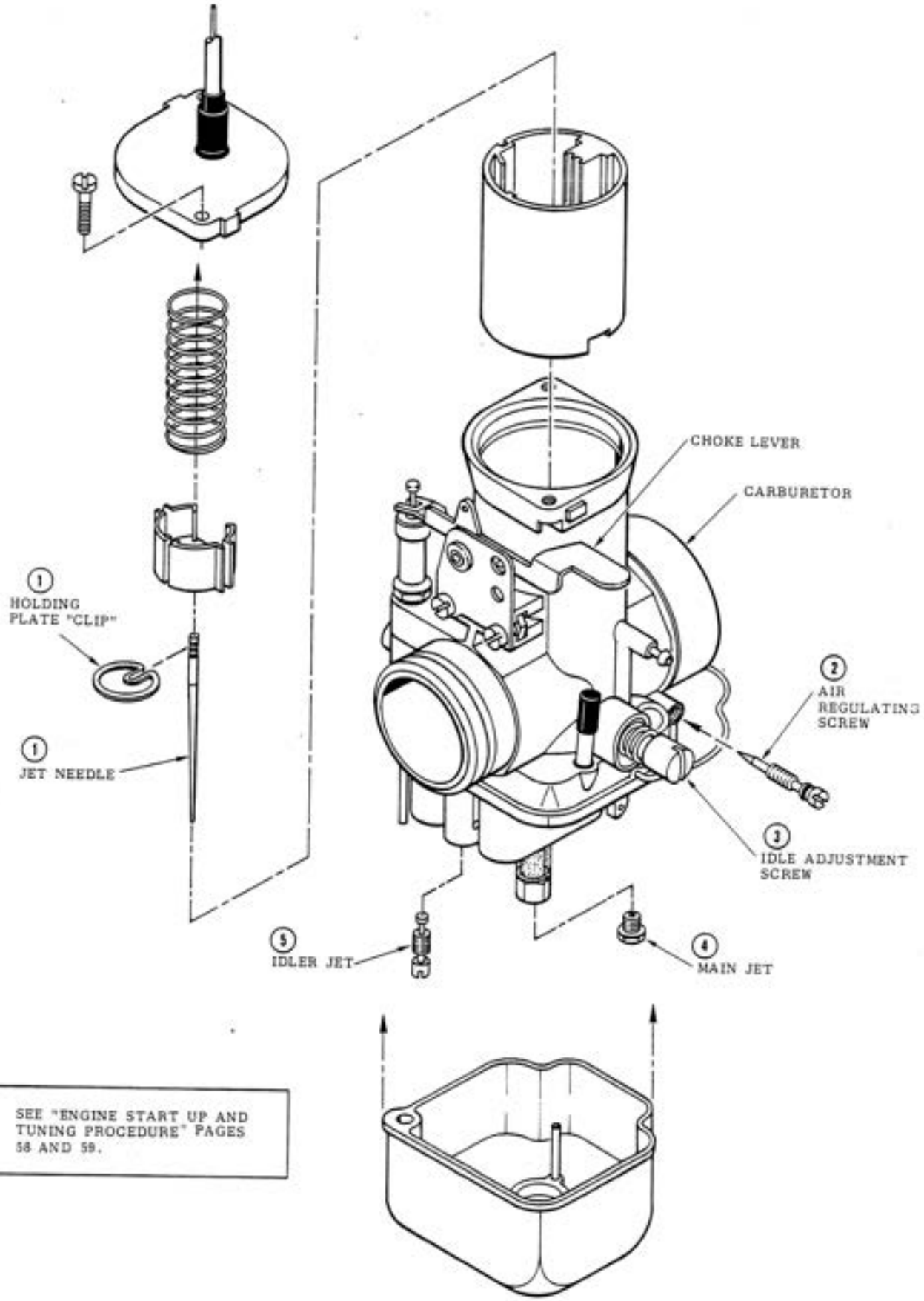

SEE "ENGINE START UP AND TUNING PROCEDURE" PAGES 58 AND 59.

SECTION TEN

ENGINE START UP AND TUNING PROCEDURE

To tune the carburetor you will be concerned with 5 adjustments:

1. Main Jet
2. Idler Jet
3. Idler Adjustment Screw
4. Air Regulating Screw
5. Jet Needle and Clip

The main jet in the carburetor will vary in size depending on altitude and atmospheric conditions in your local area. Contact your dealer regarding normal main jet size for your location.

START UP

Close the throttle and depress the choke lever. Start the engine and as it warms up release the choke.

Let the engine warm up for approximately 5 minutes then run at full throttle for about 15 seconds to "clean out engine".

Back off the throttle and adjust the idle adjustment screw to a fast idle, approximately 1200 R.P.M. not so fast; however, that the plane wants to taxi away.

Now adjust the air regulating screw to get a smooth idle.

If the idle runs rough, it is either too "rich" or too "lean". Too rich a mixture will cause heavy smoking and a too lean mixture will cause the engine to want to die out. To correct this, turn your attention to the idler jet. For a too "rich" mixture (smoking) install a smaller numbered idler jet. If the engine runs "lean" install a larger numbered jet.

Now turn to full throttle and mid-range tuning.

Your concern here will be the "main jet". This jet is similar to the idler jet with regards to running too rich or too lean. Generally, use the largest main jet that the engine will run smoothly on. It is advised that a head temperature gauge be used and with the engine at full throttle or at mid-range (1/2 to 3/4 throttle). The temperature should not exceed 400° F. in a 4-5 minute run up.

If the temperature exceeds 400° F. during this run up procedure change the holding plate "clip" on the jet needle to a lower groove on the jet needle.

If at full throttle the engine "4 cycles" (fires every other time) or emits heavy blue or black smoke or stutters, change the main jet to a smaller size. If the engine R.P.M. increases when the throttle is backed off slightly from full throttle, the main jet is too small. This causes overheating and could lead to piston seizure.

If at full throttle the engine R.P.M. drops when the throttle is backed off slightly, the main jet is correct or slightly large. This is acceptable.

ENGINE START UP AND PROCEDURE CONTINUED

If the engine runs smooth and strong at full throttle, but stutters in the mid-range area, the holding plate "clip" should be raised to allow smooth running and fast acceleration. The normal setting for this clip is in the center groove on the jet needle.

Now recheck the idle adjustment. Back off the throttle and turn the idle adjustment screw in as far as it will go.- (bottom out on spring) now back it out about 1/2 a turn or until you get a slow idle. Turn the air regulating screw in or out until you get a smooth idle.

Feel free to contact your dealer or the factory, if you have need for additional assistance or information.

SECTION TEN

BEARING LUBRICATION

BOTH THE DRIVE SHAFT AND THE PROPELLAR SHAFT MUST BE PERIODICALLY RE-LUBRICATED TO ASSURE LONG LIFE. THE BEARINGS SHOULD BE LUBRICATED EVERY 50 HOURS OF OPERATION OR EVERY 30 HOURS IF OPERATED IN EXTREME DIRT/DUST INVIRONMENT.

1. REMOVE THE PROPELLAR AND BELTS.
2. TURN THE PROPELLAR SHAFT BY HAND AND LISTEN FOR ANY UNUSUAL SOUNDS SUCH AS GRINDING, CLICKING ETC. IF ANY ABNORMAL SOUNDS ARE HEARD THE BEARING MUST BE REPLACED. CONTACT YOU DEALER.
3. IF SHAFT RUNS SMOOTHLY, REPLACE AND ADJUST THE BELTS.
4. WIPE ALL SURFACES CLEAN.
5. START THE ENGINE AND RUN AT IDLE SPEED (DO NOT REV. UP)
6. FEED THE SPECIFIED LUBRICANT INTO THE BEARING SLOWLY UNTIL A SLIGHT BEAD OF LUBRICANT FORMS AROUND THE SEAL..
7. REPLACE THE PROPELLAR AND ALIGN AS PER PAGE 54.
8. USE ONLY A LUBRICANT CONFORMING TO A NLGI GRADE TWO CONSISTANCY. IDEALLY A LITHIUM BASED LUBRICANT.

SECTION TEN

Be sure the throttle cable, gas lines and ignition wires are secured with tie tabs and/or velcro strips to a suitable anchor (down tubes, frame, etc.) to eliminate excessive movement.

Check all gas lines and connections for signs of leakage before flight. Make sure that all pip pins are bottomed out and that all wing nuts and safety bolts have safety rings or pins.

Before engine start-up be certain you read the engine owners manual. Pay particular attention to the break-in procedures and fuel mixtures.

Remember your Quicksilver MX is not an acrobatic aircraft. Abrupt maneuvers and undo stresses put on the plane should always be avoided.

Before your first flight, go through the pre-flight check list found in your owners manual. This is very important and should become a ritual before each flight thereafter.

Our interest in your flying pleasure and experiences is an ongoing thing, so let us hear from you if we can be of any further assistance.