# LIGHT AIRPLANE DESIGN


*by Ladislao Pazmany*

**Transcripcion por Marcelo Marziali**

**e-mail : mamarziali@hotmail.com**

# LIGHT AIRPLANE DESIGN

by

L. Pazmany

(Illustrations by the Author)

Published by L. Pazmany
Printed in the United States of America
San Diego, California

For information, address the publisher,L. Pazmany, P.O. Box 10051, San Diego 10, California.

THIRD EDITION

The author is indebted to the National Aeronautics and Space Administration for their courtesy in per- mitting the reproduction of their reports and to the Controller of Her Britannic Majesty's Stationery Office who authorized the reproduction of some figures from R & M No. 2622. Copyright is not claimed in this material.

# PREFACE

This book describes the Preliminary Design of the Pazmany PL-1 "Laminar" airplane, which now has more than 450 hours of flying time. At a future date other volumes will be published covering: Performance, Stability and Control, Structural Design, Stress Analysis, Construction and Flight Tests.

It is not easy to predict all flying qualities of an airplane using calculations. This applies either to the simplest "home-built" or to a sophisticated ????r???? fighter, mostly when they are of unconventional type, like the delta wing. There are too many variables in the game, especially when stability and control is the subject. The aerodynamicist needs the help of wind tunnel testing and simulators to rectify or ratify his calculations.

The PL-1 is a conventional airplane fcr present standards; nevertheless, modern aerodynamic and structural data were applied in every phase of the design.

At the present more than 4o PL-1 airplanes are in constructicn all over the United States and Canada. A few are in construction in Australia, India, New Zealand, Panama, British Solomon Islands and England.

The combination of the selected laminar airfoil with the untwisted rectangular planform resulted in a very efficient wing with extremely gentle stall and very good aileron control. The airplane has no "vices" and is easy to fly. The acrobatic capabilities cf the PL-1 were demonstrated publicly in several air shows; all kind of acrobatic maneuvers were executed; barrel, snap rolls, immelmans, spins, loopings, stalls, etc. Also, the landing characteristics were evaluated. The corrnnents can be surrnnarized as "An excellent trainer" "a very good acrobatic airplane" "It is impossible to make a bad landing."

This book is dedicated to the great "amateur-builders" family hoping that it will encourage them to be a little more "amateur-designers." Particular thanks are due to Mr. Karl Sanders for assistance in proofreading and helpful criticism and suggestions.


Photo from AIR PROGRESS Magazine by Don Downie

# INTRODUCCTION

The most difficult problem in designing an airplane, When this job is done by an inexperienced person, is to find a guide that shows step by step the sequence in which the different problems have to be approached and solved.

The amateur designer can select between two extreme procedures: 1) Eyeball, 2) Engineering. The procedure described in the following pages is an interrnediate Way, and it must be stated here that this is only one of the many ways.

The necessa knowledge about different subjects, such as Aerodynamics, Stress, Structural Design, Air Regulations, is distributed in many sources of information. To find this knowledge it is necessary to invest a great amount of time searching and reading. Sorting out useful material takes up the most time because 90 per cent of the information is not related With the actual problem.

But it is not only enough to find the information in books and reports. The second problem is "how to put it to use" and for answering this question nothing is better than an example. This is the idea behind this publication--a guide for the amateur airplane designer.

No higher mathematics will be used, only the four basic algebra operations, along with many graphs and diagrams.

Sometimes more than one approach to a problem will be given, with the related comments about its usefulness. Of course, many solutions are influenced by a personal viewpoint.

The reader must keep in mind that there are no "prescriptions" to design airplanes. If some airplanes have large wing fuselage fairings or nicely rounded Hing tips, that does not mean that "all" airplanes must have wing fillets or rounded tips.

A large wing fillet might reduce the interference drag, but its weights and production complications could be a good reason to leave it out and take the penalty in performance. The design of an airplane is not a simple task but a series of compromises.

## 1-PRELIMINARY DESIGN

The first step in the design of an airplane consists of defining the characteristics of the airplane and its use. In aeronautical engineering this is called "Mission Definition," and could be applied as well to an amateur-built airplane.
"Wath do you want to do with the flying machine?" is the first question. The design task will be very much simplified if a straight answer to this question could be spelled out. But when some advancement in the state-of-the-art is desired, it implies characteristics which are not always compatible.

On the other hand, do not try to make a break-through in aerodynamics or structures. Prívate industry and goverment agencies are spending fantastic amounts of money in research, and the results are published in reports. Take advantage of this material which is generally free.

A few rules worthwhile keeping in mind are:

1. Make it big inside and small outside as the compact cars.

2. Make it strong enough to carry the loads.It is worthless to overstreghthen some non-critical parts while the main spar is weak.

3. Reduce weight even before you start your design. Assume optimistic weights for your components; they will go up anyway. You probably heard about the "weight spiral."

4. Do not penalize the design by using oversize or overweight components of "existent" airplanes.

5 Use a minimum choice of basic materials.

6. Use minimum number of parts.

7. Do not give up any reasonable chance to "clean up" your design.

8. Keep a continuous check of your weight and balance all through the design.

9. Build a full-size mock-up of the cockpit in the earliest stage of the design.

10. Do not hesitate to spend some thousands hours in the design of your "bird".It will be well rewarded during the construction, but mostly during flying.

## 1-1 GENERAL CHARACTERISTICS

Specific Use : Sport, Trainer, Acrobatic, Two Places.
Inhererent Attributes : Safety.
Appearance : Functional.

**Fuselage**
Type of Construction : SemimonocoQue.
Basic Structural Material : Aluminum Alloy.
Skin Material : Aluminum Alloy and/or Magnesium.

**Wing**
Type of Construction : Cantilever, Detachable, Carry-through Spar.
Shape : Rectangular.
Location : Low
Airfoil : To be selected.
Aspect Ratio : ~ 7
Area : ~ 100 sq.ft.
High Lift Devices : Flaps.
Wing Loading : ~ 10 lbs/sq.ft.
Spar Material : Aluminum Alloy.
Skin Material : Aluminum Alloy or Magnesium.

**Empennage**
Fin-Rudder Configuration : Conventional.
Stab-Elevator Configuration : Conventional or Slab Tail.

**Power Plant**
Type : Opposed, Air-cooled,-100 HP.
Fuel System : Gravity and electrical booster pump.
Tank Location : Wing tips. (Optional fuselage tank for extended range.)

**Cockpit**
Control Type : Stick.
Instruments : Nominal.
Canopy Type : Sliding, Bubble
Visibility : Normal.

**Landing Gear**
TYpe : Tricycle, Fixed.

**Weight**
Empty : ~ 750 lbs.
Gross : ~ 1300 lbs.

**Desired Performance**
Stalling Speed : N 50 mph.
Cruising Speed : N 115 mph.
Max. Speed : N 135 mph.
Range : N 450 miles.
Service Ceiling : N 15,000 ft.

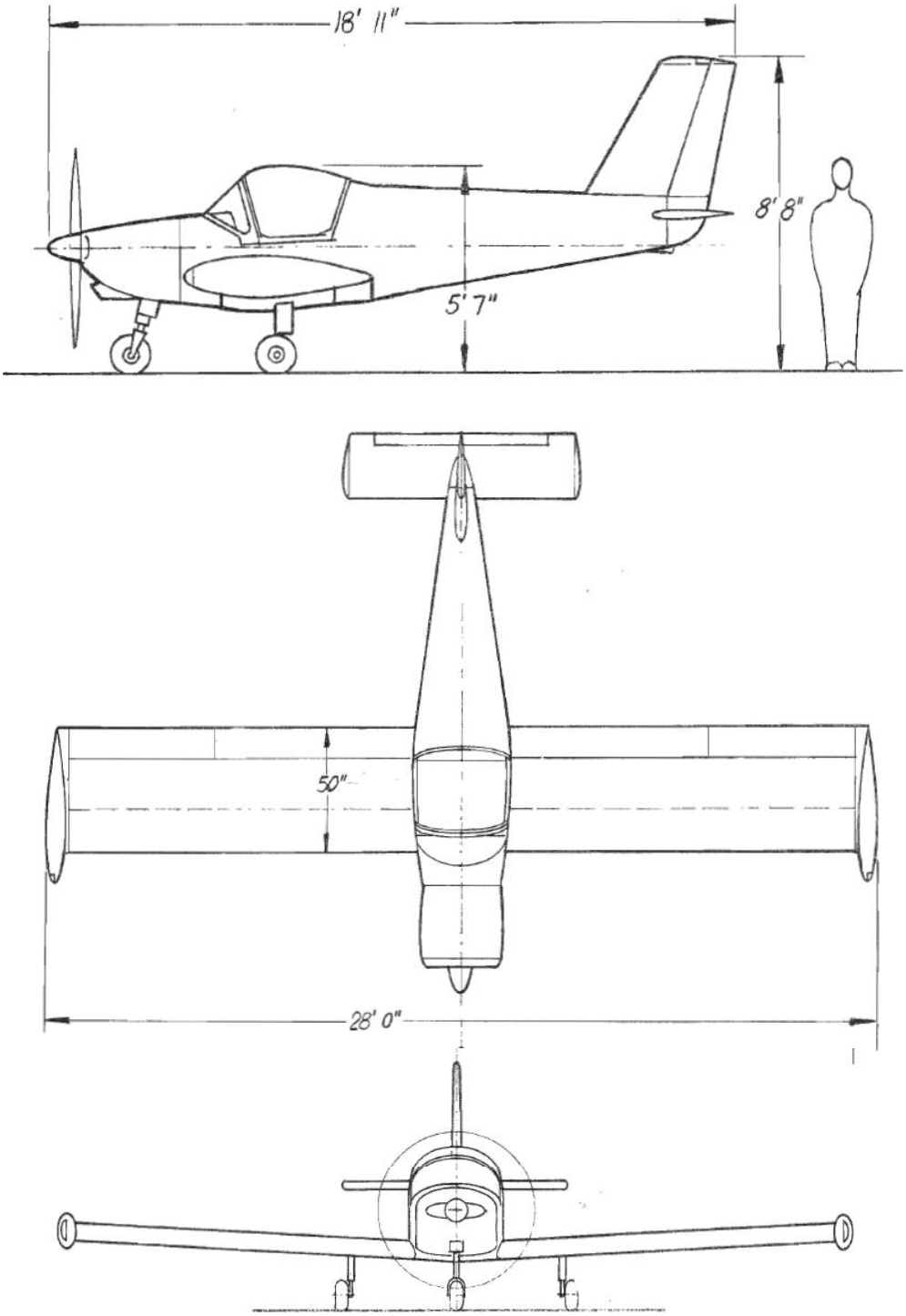


Fig 1 . PAZMANY PL1 "laminar" - General Arrangement

**1-2 WHY AN ACROBATIC AIRPLANE ?**

CAR - Part 3 (Ref. 1) paragraph 3.186 establishes the following:

"Maneuvering load factors (a). The positive limit maneuvering load factor shall not be less than the following values

$$n = 2.1 + \frac{24,000}{W + 10,000}$$

Category normal

except that n need not be greater than 3.8 and shall not be less than 2.5

n = 4.4 Category Utility

n = 6.0 Category Acrobatic

On paragraph 3.20 of the same regulation, Airplane categories are defined:

**(1)Normal - Suffix N** - Airplanes in this category are intended for non-acrobatic nonscheduled passenger, and nonscheduled cargo operation

**(2)Utility - Suffix U** -Airplane in this category are intended for normal acrobatic maneuvers. Thes are

inverted maneuvers.

Limited Acrobatic Maneuvers' is interpreted to include steep turns, spins, stalls (except whip stalls), lazy eights, and chandelles.

**(3) Acrobatic - Suffix A -** Airplanes in this category will have no specific restrictions as to type of maneuver unless the necessity therefor is disclosed by the reg_uired flight test.

Relatively few components are affected by the higher load factor due to the acrobatic maneuvers, while a great part o the structure is dimensioned by minimum practical gauges. Thus, with a small weight penalty, used to "beef-up" some critical such as the wing spar, the airplane can be designed to meet the requirements imposed by the "Acrobatic" category instead of the "Utility."
The additional strength also covers future possibilities of increasing the engine power. In such case the airplane could be reclassified in the uUtilityu category with no change--or very minor changes, depending on the HP increase.
Another consideration which is becoming more and more important these days is **the** effect of wing tip vortices generated by fast flying highly loaded airplanes such as jet transports or bombers.
A CAB investigation report on the desintegration of a widely used air-planes relates that: "A light aircraft at 100 mph penetrating the vortices of a large jet aircraft at 90 degrees and one mile behind recorded an acceleration of plus 2.5 g and minus 3.5 g." Other aircraft at greater speeds have measured structural loads as high as 9 g in the wake of a large aircraft.

When a large jet aircraft climbs at approximately 420 mph, the peak turbulence is 3-1/2 mi. in back and a relatively high degree of turbulence will exist at 7 mi. In relatively still air, the turbulence can persist for several

minutes or long after the aircraft is out of sight. The study indicates that vortices can persist, for as as 30 minutes

Negative load factors higher than the mínimum ultimate design Normal Category personal aircraft can reasonably be expected.

The previous report, only, should be enough to revise CAR Part 3 to meet the problems of this "jet age".

## 1-3 WHAT CONSTITUTES A SAFE AND EASY TO FLY AIRPLANE ?

The flying qualities of an airplane may be defined as the stability and control characteristics that have an important bearing on the safety flight and on the pilots impressions of the ease of flying and maneuvering an airplane.

These words are reproduced from NACA - Industry Conference on Personal Aircraft Research" - (Ref. 2). The reading of this publication is a must for the aircraft designer. *The* amount of experience and recommendations presented is so great that it is not possible to reproduce here. Following are a list of some of the paper included.

"History and Significance of Measured Flying Qualities"

"Flying Qualities Requirements for Personal Airplanes".

"Proportioning the airplane for lateral stability"

"Design of control surfaces"

"A Flight investigation to increase the safety of a light airplane"

"Factors affecting spinning of light airplanes"

Generally it can be said that a rough stability and control analysis is more important than a refined perfomance improvement.

It is often believed that the stability of an aircraft is only a function of the C.G. position. Many designers are satisfied when they balance the airplane at 25% of chord, but the stability is also controlled by other factors as will be outlined in the second part of this book.

It is much safer to spend some time investigating at least some stability and control characteristics than it is to follow the usual method of "cut and try"

Some designers are worried about the strength of a spar, yet they are completely careless about the location, size or travel of the elevator.

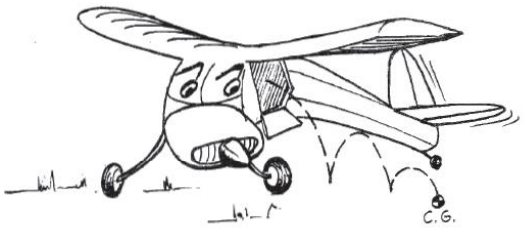

## 1-4 AESTHETIC OR FUNCTIONAL ?

A functional airplane can be aesthetic, and by aesthetic it is meant that a certain harmony exists betveen the different components.

Of course that "certain" harmony depends upon the individual taste, but it is not difficult to recognize that an elliptical wing does not combine with a rectangular elevator; and obviously it would be useless to make a streamlined wheel fairing for an open cockpit airplane whose maximum speed is 60 miles per hour.

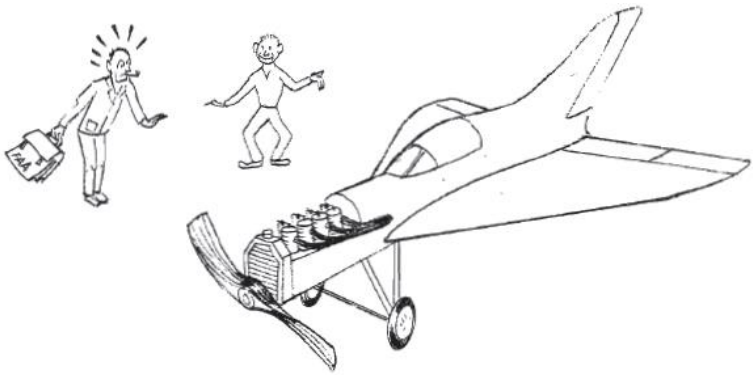

A fundamental idea in the design of an aircraft is to make as small yet as functional as possible. In Figure 2 the side of this airplane an a conventional two-places airplane are superimposed using the same scale.

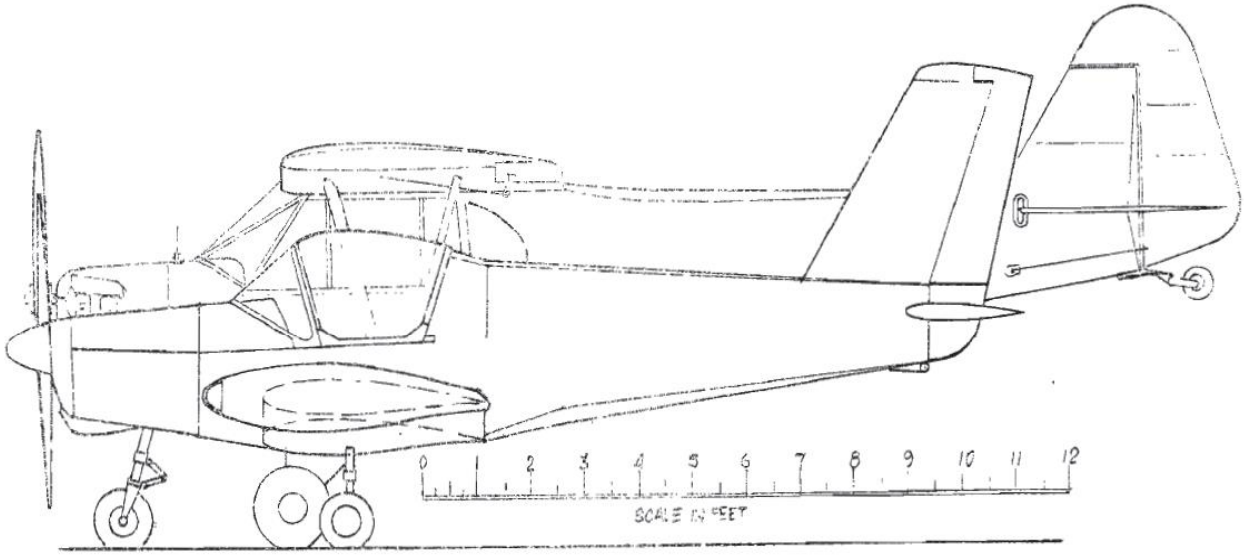


**FIGURE 2**

## 1-5 WHY SE.MI-MONOCOQIJE CONSTRUCTION?

The Semi-monocoque construction is widely used for airplanes of this size and characteristics. The fuselage built around four longerons does not require complicated assembly jigs (see photo), and also, it is an efficient structure to transmit the loads. The stress analysis is simple, each side of the fuselage can be considered a beam, while the box formed by the four sides carries the torsional and shear loads.

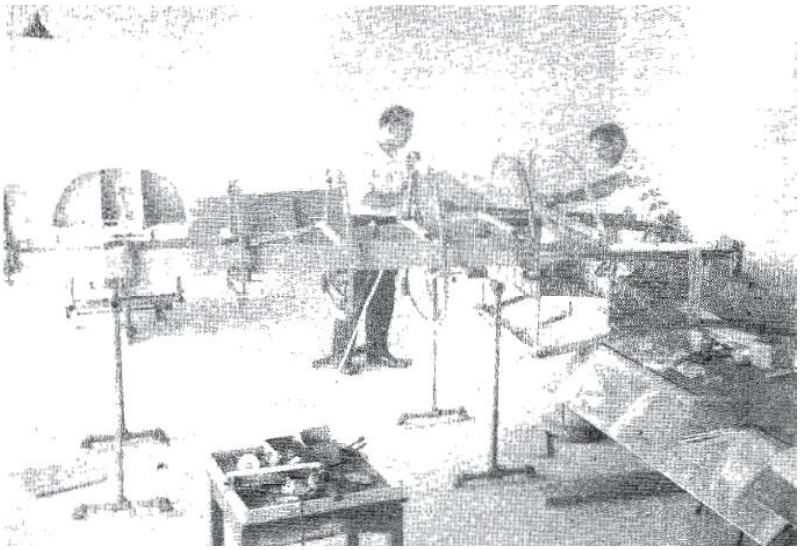

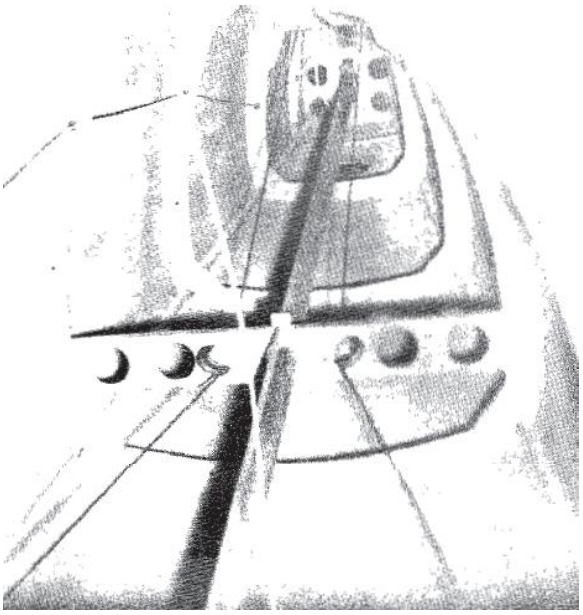

## 1-6 CONSIDERATIONS ABOUT AN ALL-METAL AIRPIANE.

A.- Material

The Aluminum Alloy will be used for all the structural parts. The uniformity in quality is better than plywood or spruce. With a metallic skin, the expensive fabric finishing is eliminated, not only as an initial investment, but also at the periodical overhaul.
In the December 1945 issue of S.A.E. Journal (Transactions), a very interesting article was published. The title is "Wood vs. Metal Construction in Aircraft" by Herb Rawdon, Assistant Chief Engineer of Beech Aircraft Corp. In this article is related a comparison of wood and metal as material for aircraft construction based on the fortunate circumstance that the Beech Company was building an all-metal and a plywood covered airplane for the AAF at the same time.
After many interesting discussions and examples, one of the final considerations are: "The weight of the metal structure is less than wood, even in the smaller airplanes"
At the end of the article there is a comparative table about weight of different materials used in the construction of equivalent Outer Wing Panels for the At-6 Aircraft.

**TABLE 1**

| MATERIAL | WEIGHT | WEIGHT IN % OF AL. |
|---|---|---|
| Magnesium (riveted semi-monocoque | 158.6 | 87.4 |
| Aluminum | 181.5 | 100.0 |
| Stainless Steel | 208.0 | 114.6 |
| M 4610 steel | 207.9 | 114.5 |
| Magnesium (welded monocoque) | 230.0 | 126.7 |
| Plywood | 296.0 | 163.0 |
| Plastic plywood | 293.0 | 161.0 |

B.- Weight Comparison Between a Fabric and Magnesium Covered Wing

From the Volume 1 of the "Weight Handbook" of the S.A.W.E. (Society of Aeronautical Weight Engineers): (Ref, 3)

Page 3-11 : Airplane Cotton Cloth-Mercerized: 0.0273 lbs./sq. ft.

Page 3-05 : Flightex fabric (bare): 0.0281 lbs./sq. ft.

Fabric finish regular 9 coat system: 0.0600 lbs./sq. ft.

This finish includes 4 coats Clear Nitrate *Dope,* 2 coats Pigmented Aluminum *Dope)* and 3 coats Colar Pigmented Dope.

Then : Fabric .....0.0280 lbs./sq. ft.

Finish .....O.0600 lbs./sq. ft.

Tape and Stitching ...O.Ol20 lbs./sq. ft.

**Total** .1000

Obtained from Page 33.03 of the same manual:

Fabric covering (including Tape, Stitching and Dope)

Unitary weight 0.100 lbs./sQ. ft.

This agrees with the previous value.

The estimated "wetted" wing area = lOO sq·ft. x 2

Weight of fabric covering 200 x .100 = 20 lbs.

Assuming that the leading edge of the wing up to the main spar will be covered with .o40 inch magnesium "stressed" skin, while the remaining surface will be covered vlith .020 inch "non-stressed" magnesium skin:

Unitary weight of .040 Mg = .368 lbs./sQ. ft.
Unitary weight of .020 Mg = .184 lbs./sQ. ft.

.040 Mg surface = 35% of 200 sq. ft . = 70 sq. ft.
.020 Mg surface = 65% of 200 sq. ft. = 130 sq. ft.

weight of .040 Mg sheet = .368 X 70 = 25.8 lbs.
Weight of .020 Mg sheet = .184 X 130 = 23.9 lbs.

Additional weight due to protective coating ≈ l lb.

Total magnesium skin weight = 49.7+ l = 50.7 lbs.

Difference between fabric and Mg = 50.7 - 20 = 30.7 lbs.

This difference would be very near to the weight of the internal bracing necessary to carry the torsional and chord loads in a conventional two spar fabric covered wing.

The PL-1 airplane was originally designed with magnesium sheet covering all surfaces. In considering the use of this type material, the following objections arose:

1.- Special care is necessary to adequately protect magnesium against corrosion.

2.- Additional cost of magnesium as compared to aluminum.

3.- The possibility that this design will be released for the amateur builder may also confront him with the difficulty of procuring this material readily.

In view of these considerations, it was decided to use aluminum, resulting in a weight penalty.

At the present time, there are many civil and military aircraft in operation incorporating the use of magnesium components. It appears that if appropriate measures are taken to prevent corrosion, no other problems arise. The best example is a Ryan Q-2C Firebee jet drone which drifted 13 months in the Pacific Ocean from the coast of California to near Hawaii. The Q-2C has several magnesium parts which remained in fairly good condition.

### e□□erod□namic □d□anta□es

□ r□□□□□□□ □□□□ □□□□ □□ □□□ □□□d□□□ □d□□ □□□□□ □ □□□ □□□ □□□□□□□□r□□□□ r□□□□□□□d □□□□ r□d□□□□ □□□ □ r□□□□□□□□□□ □□□d□□□□□ □r□ □□r□ d□□□a□□□□ □□ □□□□□□ □□□ □ □□□ □□□r□□□ □□ □□□ □□a□□□□ □□□□□□□□□□ □□ □□□ □ □□□□ □□ □□□□□□□□□ □□□□□ □a□□□□□□□□ □□ □□ □□ □d□□□□□□□d□□□□□ d□□□□□□□ □□ r□□□□□□□□ □□□□□□□□□d□□ □□□r□□□□□ □□ □ □□□□□r□□□□ □r□□□□ □□□□ □□ □□□ □□r□□r□ □□□□□

### d□Man□□act□rin□ □d□anta□es

□□□ □□□□□r□□□□□ □□□□□ □□□□□ □□□□□□ □□□□a□□□□□ d□□□□□□r□□□□t□ □ □□□ □□□□□□□ □□□□□ □□□□□□□ □r □ □□□□□r□□□□□□□□ □□r□□d □□r□□ □ □□□ □□d □□□ □□ □□□□d□d□□□□□□□□□ □□r□□□□r□ □□□□□d □□□□□□□□□□□□ d□□□a□d □□ r□d□□□ □□□□□□□□□□ □□d □□ □r□□□ □□□□□□□□□□□□□ □□□□□r□□□□□d □□□□d□r □□□ □□□r□ □□□ r□□□□□□ □r□□□□□ □□□□□r □□□□□□□□ □□d□□□□□□□d r□□□□□□□□□ d□□□□□□d□dr□□□d □□□□□d r□□□□□□d□ □ □□□□ □□□r□□d □ □□d□d □□□□r□□□□t□□□ □r□ □□□□□r□□□□□□ □□ □□□□□d□□□r□□□r□ □r□□□ □□d r□□□□□ □r□□ r□□r□□□□□□ □□□ □□□□□r □□□□ □□r□□□□□ r□d□□□□□□□□ □□□□ □ □□d□ □□d□d □□□□□□□□ □□ □ □□□□□ □□r□□□□□ □□□□□

## 1-7 WHY CANTILEVER WING?

□ □□□ □ □□□□ □□□rd□□□□□□□□□ r□□□□ □□□□□□□ □□ □□□□□□□□□ □□ □□□□d □ □□□□□□□□r □ □□□ □ □□□ □□ □□□□□ □□□ □□r□□□□ □□ □ □□r□□□r□□□d□□□□□□□ □□□ □□□ □ □□□□□ □□□□□ □□□□□ □ □□ □□□r□ □□□□□ □□□□□ □□□□□d□r□d □□□□ □□□ □□r□□□□□□□□ □□□□ □□□ □□□r□ □□□□□□□□□□□□□□□□r□□□□□□□□□ □□□□□□□□□□ □ □□□ □□□ □ddd□ □□□□ □□ □□r□d□□□□ □□□□□□□□□□□ d□□ □□ □□□ □dd□□□□□□□□□r□□□□ □□d □□□□r□□r□□□□ dr□□□□□□□□□□ □□□r□ □□□□ □□□□□□□□□ □□□□□d□r□□□□ □ □□□□ □ □□ d□□□□□□□d □□ □r□□□□□□ □□□□□□

**1-8 WHY DETACHABLE WING?**

When the idea of folding wing is applied to a cantilever low wing airplane, the designer will find very serious problems such as heavy machined fittings, universal joints, control connections, and so on. So, as a compromise, "Detachable outer panels" were tried. The width of the center panel was fixed at 92" to comply with the highway regulations. A complete design was made, and final drawings of three different types of spar connection were developed. None of them looked satisfactory. they were too complicated and too heavy. So finally it was deciced to redesign the hole wing, but this time with a different concept "one piece detachable wing".

This solution allows the possibility to tow the airplane to an airport or back home for maintenance or repair work once in a while.

The connection of the wing to the fuselage is made by means of two bolts at the main spar and about two dozen of planetus and bolts along the wing drag angle.

The only control connection will be the elevator push-pull tube since the control column and the flap lever are integral parts of the wing . the seats are built integral with the wing also.

The "one piece" wing and the fuselage with the tail surfaces installed can be accomodated on a trailer and towed on highway.

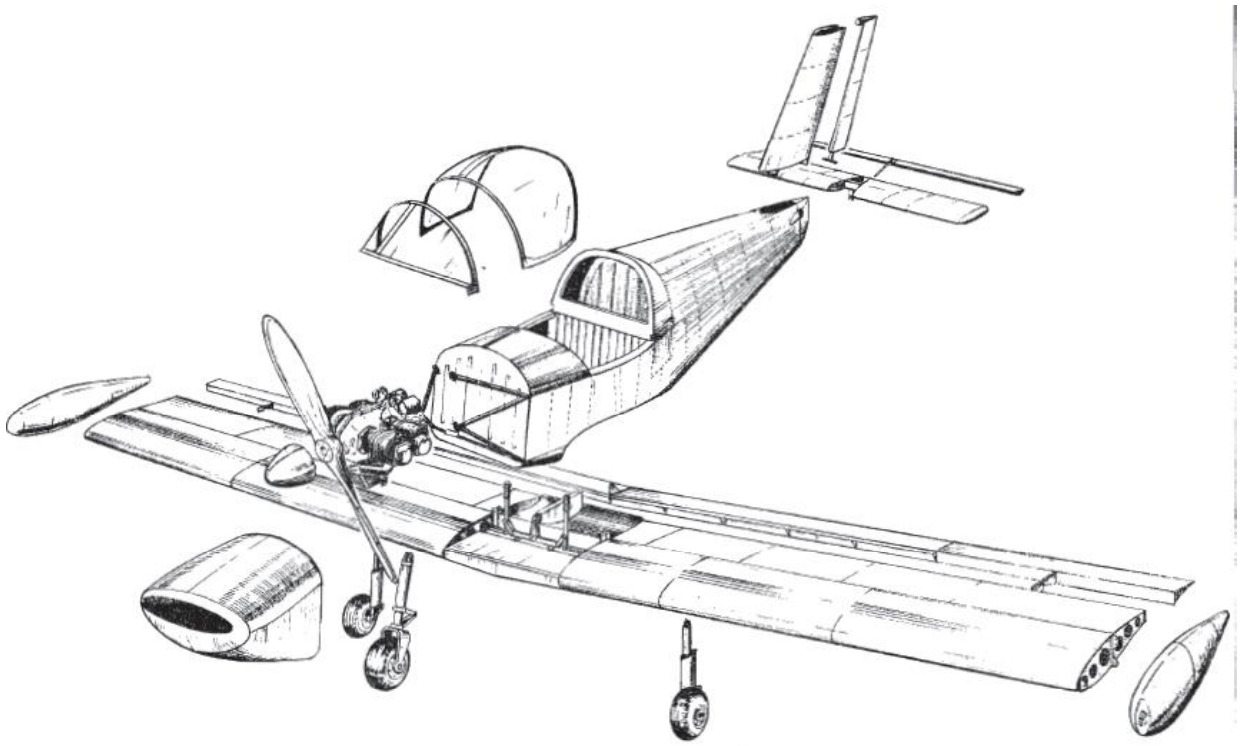

Figure 3 - Pazmany PL-1 "Laminar" - Component Breakdown

**1-9 WHY A RECTANGULAR WING ?**

From theoretical considerations and from pressure distribution tests, it can be demonstrated that the ideal wing form is the elliptical because it has the smallest induced drag. But using the same theory and tests, it was found that a rectangular wing of aspect ratio 6 has only about 5 per cent greater induced drag then that of an elliptical.

Between these two wing plan forms, there is the tapered, which has roughly one per cent more induced drag then the elliptical.

Both elliptical and tapered wings allow a lighter spar construction, but these advantages are of small importance when compared with the better stalling characteristics and simplified construction of a rectangular

In the NACA Report 927 (Ref. 4), "Appreciation and Prediction of Flying Qualities", useful information can be found relating to the stalling characteristics as a function of wing plan form.Also, almost all the problems of the aerodynamic are covered.If the designer does not have enough of a mathe- matical background, the formulas should be left out and the text read thoroughly and still provide many good ideas and basic knowledge

Figure 4 shows the influence of the wing plan form on the stall properties. All wings are untwisted. It is evident that the rectangular planform has the best stall characteristics.
The stall begins at the root of the wing progressing toward the tips, thus the aílerons remain effective while the center part of the wing is already stalled.

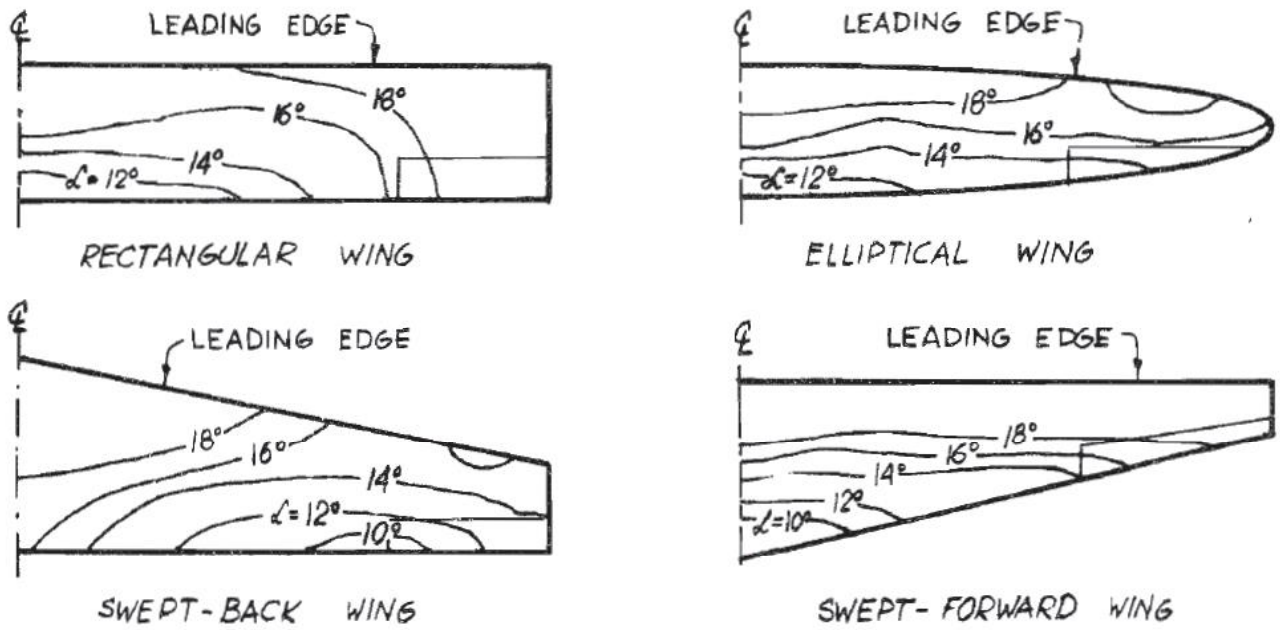


**Figure 4 - STALL PATTERN AS FUNCTION OF ANGLE OF ATTACK**

Photos were made during stall investigations of the PL-1 Laminar. The test conditions were 1400 rpm 4000' altitude, and the stalls were approached very gradually so the angle of attack could be measured against the horizon with more or less accuracy.

The first photo (see next page) shows the wing stalling with the flap retracted. The second photo shows the stall with maximum flap deflection.

In both photos, the tufts indicate that the outboard section of the wing is stalled allowing very good aileron control all through.

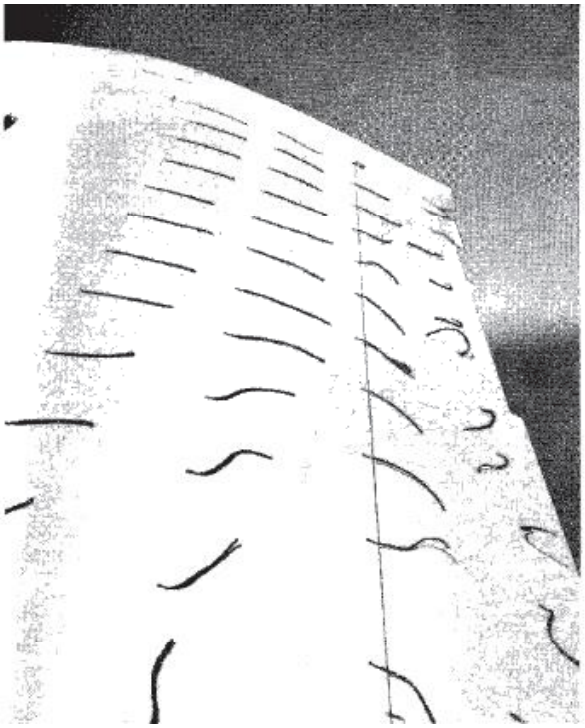

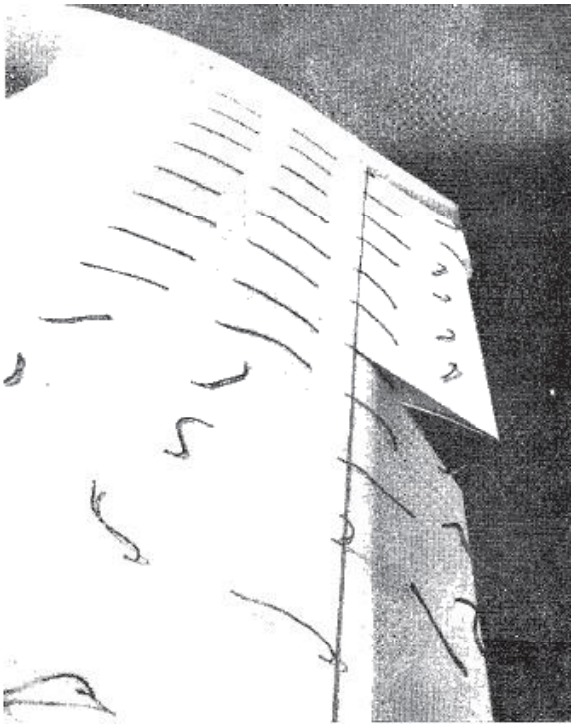

The next photo was made during another test. This time, some tufts were attached to wire masts at 2.5" and 5" away from the wing surface. These tufts are out of the boundary layer and indicate attached flow while the tufts near the trailing edge and directly on the skin are oriented s:panwise in the direction of the :pressure gradient within the boundary layer.

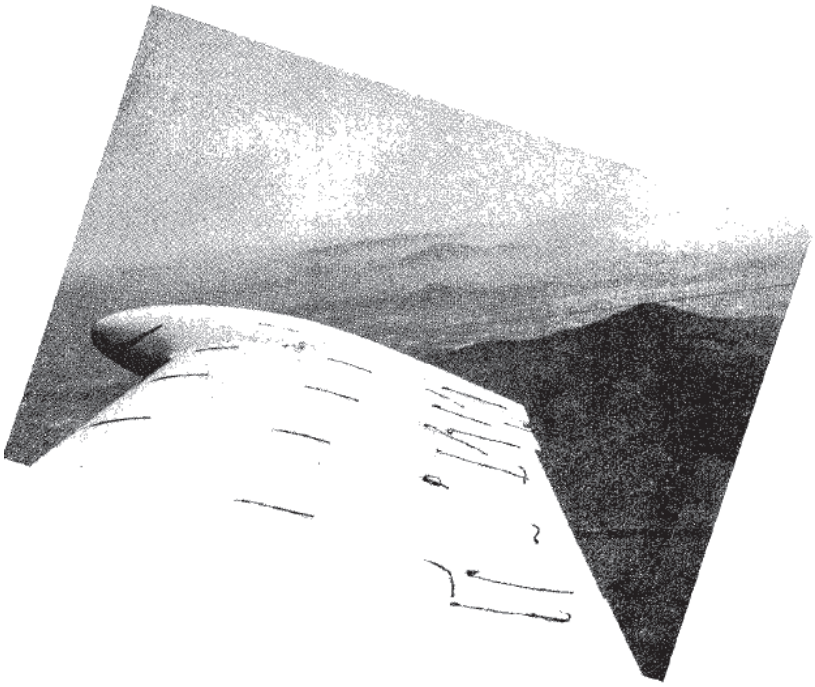

## [illegible]

The most dangerous parts of every flight probably are the take-off, landing, and flying the pattern. Visibility in a turn is greatly desired during these maneuvers. In a high wing aircraft the visibility during these critical moments is reduced mostly toward the inside of the turn. These considerations alone will decide the choice between high wing and low wing, but there are many others that can be enumerated.

Aircraft accident investigations and simple reasoning indicate that the more structure between the occupants and the ground, in case of crash, the higher are the possibilities of survival. A lot of energy can be dissipated in a low wing befare starting with the passengers. In a high wing airplane crash, the energy will be dissipated by successfully collasping the landing gear, the fuselage nose, the occupants and finally the wing.

From aerodynamic viewpoints, the fuselage cross-sectional area of a low wing airplane could be made smaller than of a high wing; the occupants could be seated over the wing. In the PL-1, the seat is directly built-in between the main spar and the rear auxiliary spar. The seat sheet metal is also part of the carry- through torque box. In a high wing airplane, the occupants cannot sit directly on the floor because it will be very tiresome. Therefore, a seat has to be pro- vided to take place of the previously mentioned torque box, but the high wing could not be lowered proportionally because the complete loss of visibility.

The interference drag of a high wing is generally smaller than of a low wing, but a good wing root fillet could reduce this disadvantage.

From structural considerations, the low wing has many advantages. The largest concentrated loads in a small airplane are the occupants; this load could be reacted directly by the low wing. This is not the case for a high wing where these loads should be transmitted from the seats to the fuselage up to the wing. No doubt that this represents a weight penalty.

The door cut-out in the high wing airplane represents a weight penalty because the fuselage bending material has to be concentrated in very shallow beams, either under or over the door cut-out. This is mostly true in semi-monocoque type structures. In welded truss type fuselages, the door cut-out is generally designed into one of the truss modules.

With semi-monocoque fuselages, sliding canopy and low wing arrangement, the fuselage bending material could be designed into two deep beams forming the fuselage sides, resulting in a considerable weight saving.

The main landing gear struts in a low wing airplane can be very short if they are attached to the wing spar. This represents a minimum weight and parasite drag. The wing spar does not need to be strengthened to take the landing gear loads because the air loads are critical. In the PL-1 airplane, the main gear and the nose gear shock absorbers are identica therefor a reduction in dissimilar parts has been achieved. (See photo next page)

The low wing configuration allows a running flap under the fuselage wich provides a great increase in lift and drag when lowered. If we cosider that the flap function is not only to provide high lift but to steepen the flight path, this is of appreciable value.

The flap and aileron control mechanism can ve very simple in the low wing configuration. In the PL-1, the flap mechanism consiste basically of a lever, a push-pull tube and a horn directly attached to the flap rib as shown in next photo. Obviously this simplicity cannot be achieved with a high wing arrengement.

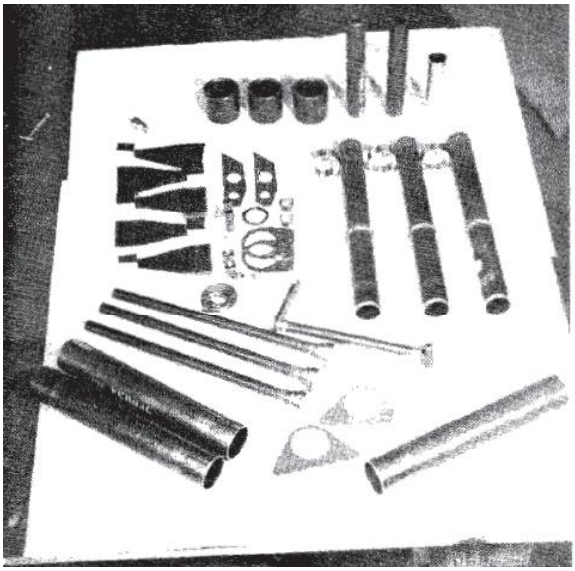

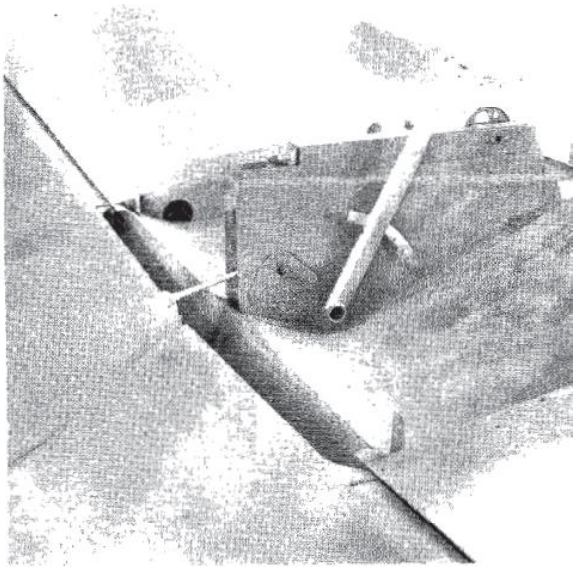

## 1-11 CRASH WORTHINESS

Airplanes aristics are not supposed to crash, but statistics have shown that a few of them do. High speed crashes in rough terrain are not survivable, but many crashes happen in such conditions that the cchances of survival are great.

Every effort should be made to provide adequate protection to the occupants in case of a survivable crash. the wing tip tanks of the PL-1 are already a safety feature since the only fuel in the fuselage will be contailed in the fuel lines.

The fuselage, safety shoulder  harness and the associated structure should be designed to take the ultimate accelerations specified by CAR 3.386, reproduced below

**TABLE 2**

| Direction of load | Category | |
|---|---|---|
| | Normal & Utility | Acrobatic |
| Upward | 3.0 g | 4.5 g |
| Forward | 9.0 g | 9.0 g |
| Sideward | 1.5 g | 1.5 g |

As a matter of comparison, the U.S.Navy 40 g s (ultimate) load factor for their airplanes. Airplane crash investigations have shown that even in very mild accidents, the occupants are subjected to accelerations well over 9 g s. On the other hand, investigations on the human tolerance to decelerations have shown that an adequately restrained body could tolerate up to 40 gs without injury.

Another consideration is that there should be no heavy components or structure behind the occupants. A battery installed in the tail cone of the [illegible] becomes a missile in a crash, and pusher engines should be directly forbidden by regulation.

CAR 3.386 establishes that penetrating or relatively solid objects should be avoided in cockpit. To this can be added that the fuselage structure should be designed such a way that it will bend or break outward, away from the occupants in case of an accident. The cockpit upper longerons in the PL-1 are curved outward so that under a compression load they will bend out. The instrument panel should be collapsible to avoid head injuries and the heavy instruments should be mounted on shear and as low as possible .

In other words, the two most important considerations in crash worthiness are:

1.- If the cabin of the airplane did not collapse as a result of an accident, the occupants should survive.

2.- Nearly 80 per cent of the aircraft accident fatalities are due to head injuries (figure 5).

The next more dangerous detail in the cockpit is the control wheel. Again, statistics have shown that in many mild accidents where the cockpit remained survivable, the control wheels are slammed forward by the force of the crash, and if no shoulder harness is provided, the torso will be free to rotate and the head will hit the control wheel.

In other cases, the control wheel is pushed backward when the firewall collapses, producing chest injuries just as in typical car accidents.

The PL-1 airplane has stick controls which, firstly, are short and very difficult to hit even with bent chest. Secondly, the elevator push-pull tube inertia, in case of a crash, will push the control sticks away from the occupants.

Fig 5

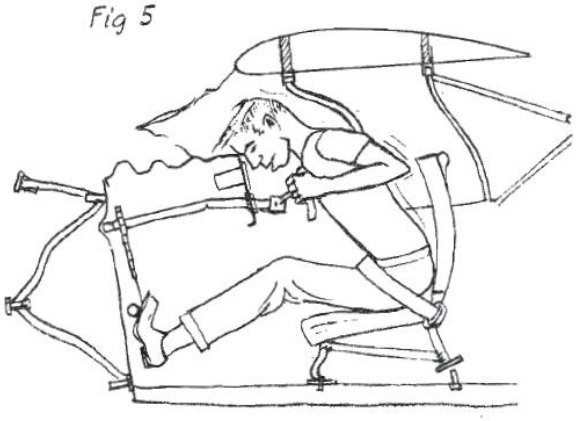

Fig 6

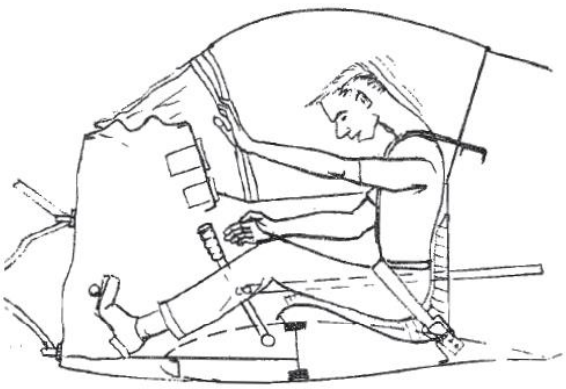

Anotner very common practice is the use of foam rubber seat pillows wich have no energy absorption capacity. The sequence of what generally happens in a crash is as follows :

1.- The airplane hits the ground and the structure starts collapsing. The occupant starts compressing the foam rubber cushion.

2.- After the initial impact, the airplane structure rebounds but the passenger is still comming down ivith the initial speed because the foam rubber cannot provide any breaking reaction.

The cushion finally is completely and now the passenger hits the seat structure, still with tne initial velocity; but the seat, due to the rebound, is already going up resulting in a "head on" collision. This type of load on a human body generally produces vertebral injuries.

Tne solution is a crushable material such as foamed polystyrine or expanded polyvinyl chloride (commercially, ensolite). This last material can be cut, trmmed, cemented and heat formed.

There is a great amount of information about airplane crash worthiness. Institutions such as the Safety Foundation, Inc.--2809 Sky Harbor Boulevard, Phoenix, Arizona--are devoted to this subject and will provide extensive data upon request.

## 1-12 AIRFOIL SELECTION

a.- Structural Considerations.

The weight of a beam which has to carry a certain bending moment is inversely proportional to the square the dept of the beam. Therefore the thickest airfoil will house the the deepest beam, and this in turn will result in the lightest construcction.

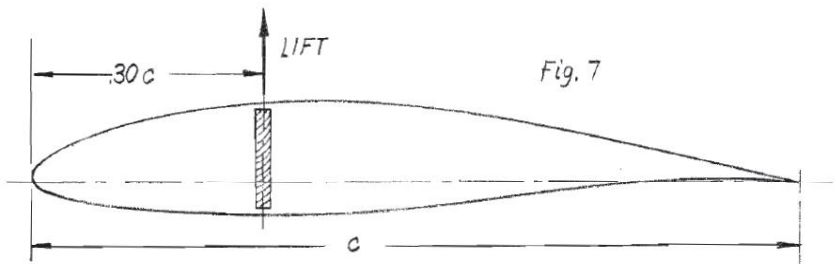

Fig. 7

The lift force in an airfoil is approximately located at 30 per cent of the chord. If the maximum thickness is also at 30 per cent, obviously this will be the ideal location for the main spar.

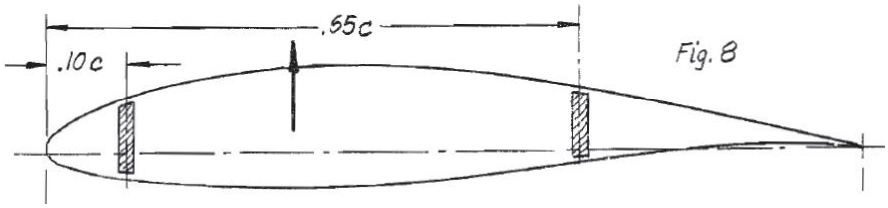

Fig. 8

In a two-spar wing, these considerations are not valid. The front spar is generally located at 10 per cent C, and the rear spar at 65 per cent C; both are points at shallower parts of the airfoil resulting a heavier structure.

b) Aerodynamic Considerations

**TABLE 3**

Airplanes Using "Laminar" Airfoils

| Airplane | Country | Places | H.P. | Airfoil |
|---|---|---|---|---|
| Wassmer Super IV | France | 4 | 180 | 63.618 |
| Picchio F15 | Italy | 4 | 180 | 640 Series |
| Aeromere Falco | Italy | 2 | 150 | 640 Series |
| Aviamilano Nibbio F14 | Italy | 4 | 180 | 640 series |
| Euklund | Finland | 1 | 65 | 633-618 |
| Heinonen | Finland | 1 | 65 | 643A418 root |
| | | | | 631A412 tip |
| Piper Cherokee | USA | 4 | 150 | 652-415 |

**TABLE 4**

Gliders using "Laminar" Airfoils

| Glider | Country | Weight (lbs) | Airfoil |
|---|---|---|---|
| Super Javelot (HA 22) | France | 750 | 630 series |
| Standard (SF 26) | W. Germany | 683 | 632-615 |
| Rhonsegler (Ka 6CR) | W. Germany | 661 | 63-618 |
| D34d | W. Germany | - | 643-618 |
| Eon 463 | England | 600 | 643-618/642-615 |
| Standard (R-25) | Hungary | 661 | 643-618 |
| Mg 23 | Austria | 794 | 63-015 |
| Strale (CVT-4) | Italy | 661 | 642-515/642-512 |
| Delfin 62 | Yugoslavia | 701 | 633-618 M |
| Edelweiss (C-30) | France | 838 | 700 series |
| Standard Austria | Austria | 712 | 652-415 |
| Foka (S2D-24) | Poland | 688 | 633-618 |
| Sagitta | Netherland | 705 | 633-618 |
| He 201 | W. Germany | 750 | 632-615 |
| Vasama (PIK-16) | Finland | 617 | 632-615 |
| Zefir 2 | Poland | 893 | 652-515 |
| Assegai (BJ2) | South Africa | 840 | 653-418 |
| Movete (Br 901 S) | France | 948 | 63 series |
| Skylark 4 | England | 830 | 633-620/6415 |
| HKS 3 | W. Germany | 838 | 65215/1116 |
| Favorit (Lom 61) | E. Germany | 683 | 652-615.5 |
| A-15 | Russia | 838 | 643-618/643-616 |
| HP-10 | USA | 825 | 65-618 Mod |
| Sisu-1 | USA | 711 | 653-418 |
| Meteor | Yugoslavia | 1.113 | 632-616.5 |
| EC-40 | Italy | 1.058 | 65-620/0009 |
| Blanik (L13) | Czechoslovakia | 1.012 | 632-A615/632-A612 |
| Capstan (T-49) | England | 1.250 | 633-620/6412 |
| Choucas (Br 906) | France | 1.014 | 63-820/63-013 |
| R-6 | USA | 1.226 | 632-615 |

Looking at Tables 3 and 4, evidently the newest "laminar type" airfoils were used in high performance airplanes and gliders all over the world. Unfortunately some designers seem to be reluctant to investigate the advantages of modern airfoils and recent designs are still using the prehistoric Clark Y or the obsolete 23012.

The following lines are reproduced from NACA TN 1945 (Ref.7) page 14:

"In the smooth surface condition, the two NACA 230 series sections are seen to possess extremely undesirable stalling characteristics at nearly all the Reynolds Numbers"

and other:

"In the rough surface condition, nearly all of the plain airfoils have good stalling characteristics at most Reynolds Numbers. The NACA 230 series sections and, at the higher Reynolds Numbers, the NACA 0012 sections are notable exceptions for even in the rough condition the stalling characteristics of these airfoils are rather undesirable".

The meaning of these words can be seen in Fig. 9 where Section Lift Coefficient curves for four different airfoils are plotted.

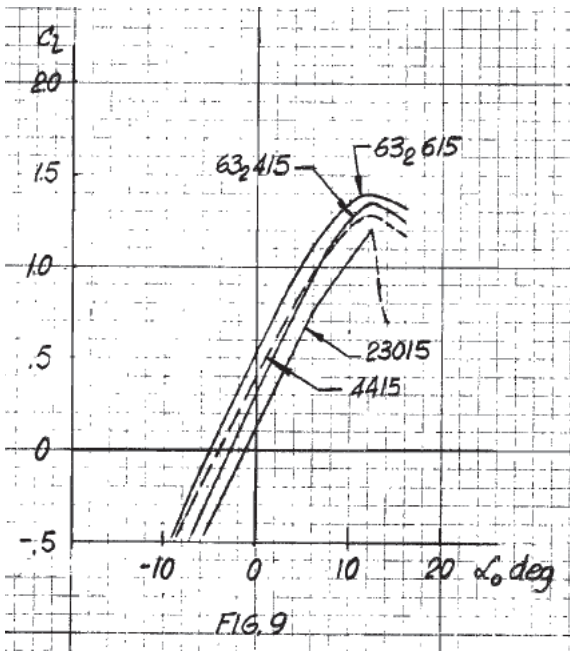

FIG. 9

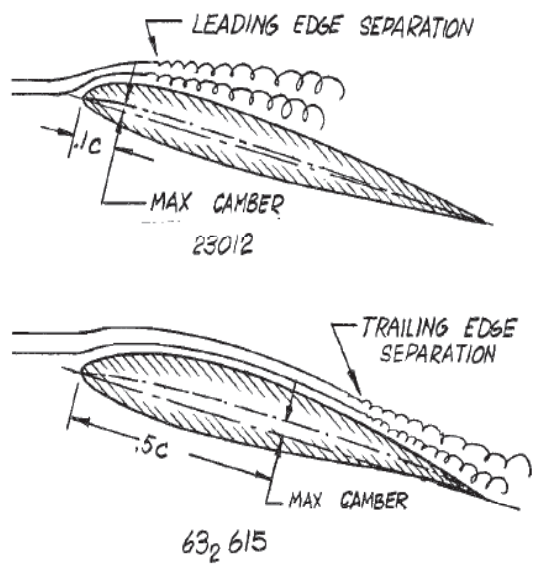

FIG 10. FLOW SEPARATION

Looking at the 23015 curve it can be seen that it reaches a CLmax = 1.2 and then drops sharply. This sudden loss of lift indicates a leading edge separation produced by far forward location of the maximum camber.

The 4415, 632415 and the 632-615 airfoils show a gradual stall related to a more rearward location of the maximum camber as shown in Fig. 10.

In NACA "Industry Conference on Personal Aircraft Research"(Ref. 2) there is a paper titled "Development of Airfoils and High-Lift Devices" by L. H. Loftin Jr. from which the following paragraphs are reproduced:

"In any case, however, the characteristics of low drag airfoils are no worse than those of conventional airfoils and, if sufficient care is taken with the surface condition, definitive advantages are associated with their use."

NACA $63_2$-615

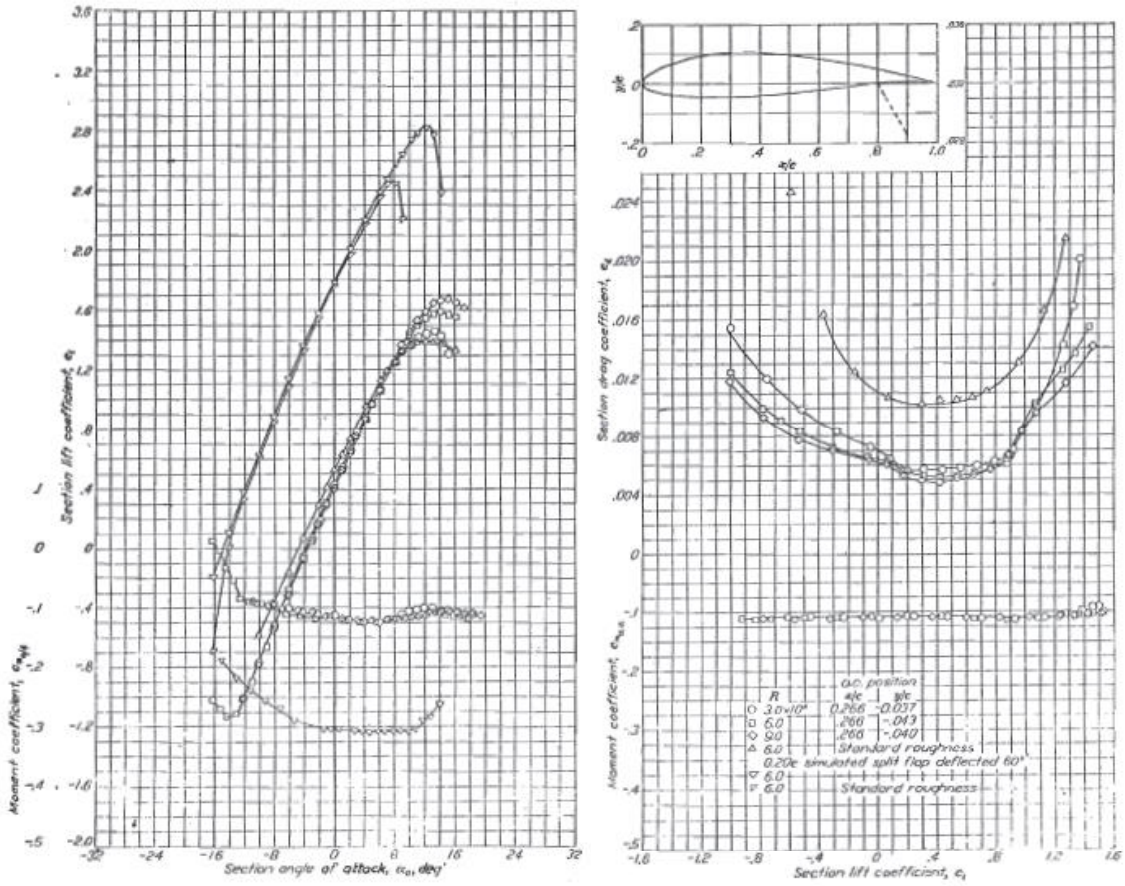


**Aerodynamic characteristics of thc NACA 632-615 airíoil section, 24-inch chord.**

On page 22 the aerodynamic characteristics of NACA 632-615 airfoil are reproduced frorn NACA Report 824. the curves in the right hand upper graph are the Sectin Drag Coefficients (Cd). The uppermost curve with "Δ" symbols represents the Cd at RN = 6.000.000 and "standard roughness". The lowest value is at Cl .30 and the curve rises gradually at both sides of this point. The curves below "O" "▫" and "◊" symbols correspond to smooth airfoils.

These "smooth airfoil" curves are not representative of conventional light airplane wing surfaces, and therefore should not be used. On page 22 of NACA TR824, there is a chapter analyzing the "effect of surface irregularities on drag", wich is very worthwile reading. Some interesting thoughts for the amateur designer are reproduced next:

"It is important to maintain smooth surfaces evein when extensive laminar flow cannot be expected, but the gains that may expected from maintaining smooth surfaces are greater for NACA 6- or 7- series airfoils wen extensive laminar flows are possible".

"It is known, at one extreme, that the surfaces do not have to be polished or optically smooth. Such polishing or waxing has shown no improvement in tests in the Langley two-dimensional low-turbulence tunnels when applied to satisfactorily sanded surfaces."

"Transition spreads from an individual disturbance with an included angle of about 15°. A few scattered specks, specialy near the leading edge, will cause the the flow to be largely turbulent. Specks sufficiently large to cause premature transition on full-size wings can be felt by hand."

And on page 24, "All recent airfoil data obtained in the Langley two-dimensional low-turbulence pressure tunnel include results with roughened leading edge. This standard roughness is considerabily more severe than that caused by the usual manufacturing irregularities or deterioration in service, but is considerably less severe than that likely to be encountered in service as a result of accumulation of ice or mud or damage in military combat."

In NACA TR824, the aerodynamic characteristics for many other airfoils can be found. For instance, on page 261, airfoil 664-221, the Cd curve for "standard roughness" rises rapidly at both sides of the Design Lift Coefficient, Cli, and for "smooth" airfoils, the rise is almost vertical; in fact, the Cd curves forms a bucket between Cl = -.3 and Cl = +.6. This is called "Laminar Low Drag Bucket".

The characteristics of the NACA 6- and 7- series airfoils are coded in the airfoil numbering system Assuming that the amateur is already familiar NACA 4 and and 5 digit systems, a brief explanation of the meaning of the 6- and 7- series digit will be made:

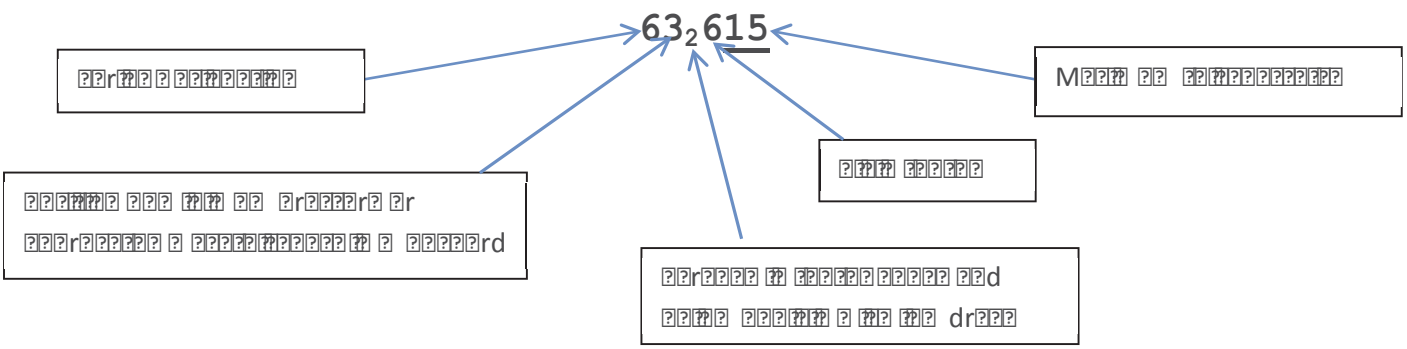


The first digit (6) is the series designation. The second digit (3) denotes he chordwise position of mínimum pressure in tenths of the chord behind the leading edge for the basic symmetrical section at zero lift. Figure 12 is reproduced from page 76 of TR824.The pressure distribution at Cl=0 reaches a peak at 30% behind the trailing edge for the $63_2$-015 airfoil.

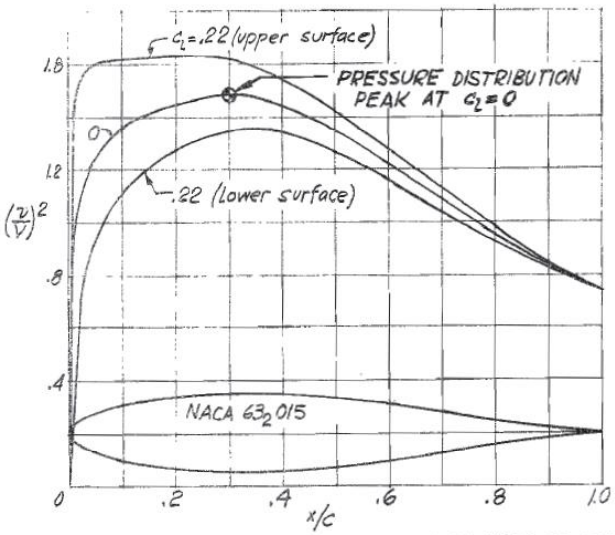


FIG. 12 - PRESSURE DISTRIBUTION ON NACA $63_2$015

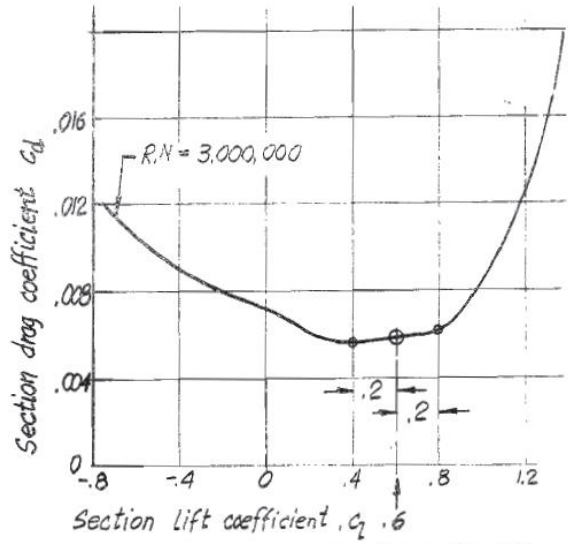


FIG. 13 - DRAG BUCKET FOR NACA $63_2$615

The third digit and the fourth digit define the shape and location of the Laminar Low Drag Bucket illustrated in Figure 13.

The fourth digit (6) is the design lift coefficient, and the third digit (2) represents the low drag range at both sides of the desing lift coefficient.

Tne determination of the Design Lift Coefficient (Cl) is described next. As most of the time the airplane is flying at cruise speed, this will be the "Design" condition to determine Cl :

Then:

$$C_l = \frac{391}{V^2} \times \frac{W}{S} = \frac{391}{110^2} \times \frac{1250}{115}$$

$$= .347$$

$$C_l \cong .35$$

Where:

V = Speed in mph

W = Airplane Average Weight

$\cong$ 1250 lbs.

S = Estimated Wing Surface

= 115 sq. ft.

In Figure 14, the Section Drag Coefficients (Cd) four different airfoils are shown.

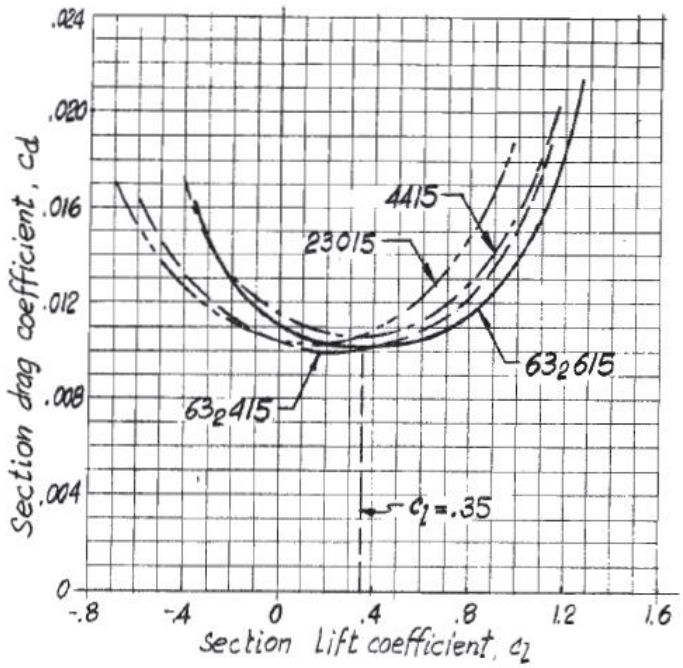

FIG. 14_ AIRFOIL DRAG COMPARISON

For the Cl = .35, the minimum Cd value is found on the $63_2415$ airfoil curve. The number "4" in the airfoil designation indicates that the airfoil has a minimum cd when Cl = .40.

The $63_2615$ airfoil has almost the same Cd at Cl = .35, while the 23015 and the 4415 have higher values.

From the previous consideration, the $63_2415$ will be the right choice, but in order to have a better ceiling, the $63_2615$ was selected. When the airplane is flying at high altitude, the angle of attack is higher, this in turn means greater drag (Cd). At higher Cl the $63_2615$ has less drag than the $63_2415$.

Another reason in the selection is that, when the Section Lift Coefficient (Cl) curves are compared (see Figure 9), the $63_2615$ has a Clmax = 1.39 while the $63_2415$ has a Clmax = 1.32, therefore, landing speed without flap is slightly reduced.
The main disadvantage using the $63_2615$ instead of $63_2415$ is the greater moment coefficient Cmac, which for the $63_2615$ is -.110 and for the $63_2415$ is -.070, resulting in a proportionally larger trim drag. A greater negative elevator deflection for trim will be necessary to compensate for the larger nose down moment.
In the previous pages, the term "Reynolds Number" (abbreviated R.N.), was mentioned several times. Any good Aerodynamics text book will have a definition of the of R.N. For practical porposes, The following equation can be used:

$$R.N. = v * c * 6,380$$

Where:

v = Speed in fps  c = Wing mean aerodynamic chord

If we desire to calculate the R.N. of an airplane flying a 110 mph with a wing chord of 50 inches, we should proceed as follows:

Speed in fps = Speed in mph * 1.466

$$v = 110 \text{ mph} * 1.466 = 161 \text{ fps}$$

Chord in feet = Chord in inches * 1/12

$$C = 50 * 1/12 = 4.17 \text{ ft.}$$

And substituting in the equation for R.N.:

$$R.N. = 161 * 4.17 * 6{,}380 = 4{,}280{,}000$$

In pages we have seen that most of the data presented by TR824 are for R.N. 3,000,000, 6,000,000 and 9,000,000. It is evident that the Section Lift Coefficient (Cl) reaches higher values at the highest R.N., on the other hand, the Section Drag Coefficient (cd) is always smaller at smaller at highest R.N.. If our airplene has a R.N.= 4,280,000 at a certain flying condition, it seems optimistic to use the values for R.N. = 6,000,000 (standard roughness).On the other hand, if the wing surface results in a very good quality, we may expect better values than the "standard roughness". Therefore, the "standard roughness", R.N. = 6,000,000 will be a good compromise for all practical purposes.

In Table 3 is listed the "Heinonen" airplane wich uses $64_3$A418 airfoil at the tip. Also in Table 4 the "Blanik L-13" glider uses a $63_2$A615 airfoil at the root and $63_2$A612 at the tip.

The meaning letter "A" in the code is that the basic airfoil has been modified to eliminate the trailing edge cuso as shown in Figure 15.

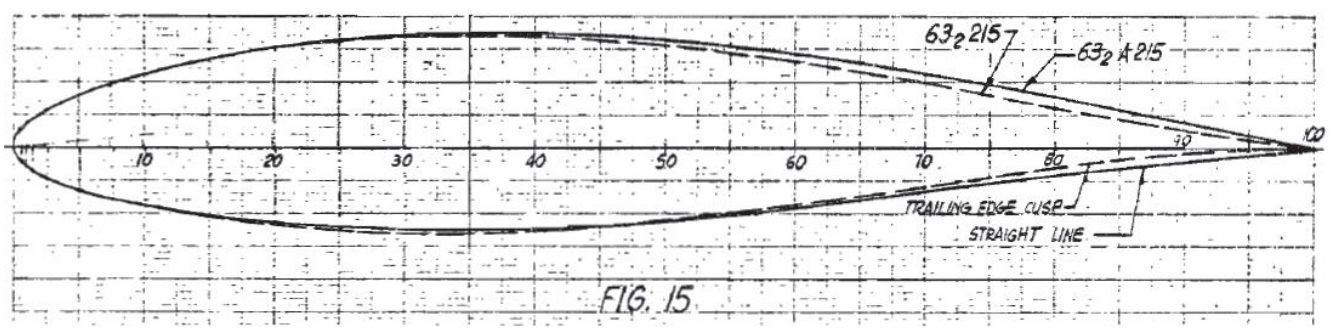

FIG. 15

The modified straight trailing edge airfoils are simpler to build and provide a deeper rib at the trailing edge which in turn will result in stiffer flaps or ailerons. The aerodynamic characteristics are practically the same as the original airfoils with the exception of the Moment Coefficient (Cmac) which is slightly more negative. The amateur buider could develope his own "A" modified airfoils using information contained in TR824 and TR903 (Ref. 8).

As an example of this method, the ordinates for the $63_2$A215 airfoil are calculated in Table 5.

# TABLE 5

| ① | ② | ③ | ④ | ⑤ | ⑥ | ⑦ | ⑧ | ⑨ | ⑩ | ⑪ | ⑫ | ⑬ | ⑭ |
|---|---|---|---|---|---|---|---|---|---|---|---|---|---|
| | $63_2$ A015 BASIC THICKNESS | FROM TR 903 Page 210 MEAN LINE a=0.8 $C_{l_i}$ = 1.0 | | MEAN LINE a=0.8 $C_{l_i}$ = .2 | | $x_u = x - y_t \cdot \sin\theta$ $x_L = x + y_t \cdot \sin\theta$ | | | | $y_u = y_c + y_t \cdot \cos\theta$ $y_L = y_c - y_t \cdot \cos\theta$ | | | |
| x | $y_t$ | $y_c$ | $\tan\theta = dy_c/dx$ | $y_c'$ | $\tan\theta' = dy_c'/dx$ | $\sin\theta$ | $\cos\theta$ | $y_t \cdot \sin\theta$ | $y_t \cdot \cos\theta$ | $x_u$ | $y_u$ | $x_L$ | $y_L$ |
| 0. | 0 | 0 | — | 0 | — | — | — | 0 | 0 | 0 | 0 | 0 | 0 |
| .5 | 1.203 | .281 | .47539 | .056 | .0951 | .09469 | .99551 | .1138 | 1.195 | .3862 | 1.251 | .6138 | -1.139 |
| .75 | 1.448 | .396 | .44004 | .079 | .0880 | .08773 | .99614 | .1271 | 1.1440 | .6229 | 1.519 | .8771 | -1.361 |
| 1.25 | 1.844 | .603 | .39531 | .120 | .0791 | .07875 | .99689 | .1453 | 1.838 | 1.1047 | 1.958 | 1.3953 | -1.718 |
| 2.5 | 2.579 | 1.055 | .33404 | .211 | .0668 | .06656 | .99778 | .1716 | 2.560 | 2.3284 | 2.771 | 2.6716 | -2.349 |
| 5.0 | 3.618 | 1.803 | .27149 | .361 | .0543 | .05408 | .99854 | .1955 | 3.610 | 4.8045 | 3.971 | 5.1955 | -3.249 |
| 7.5 | 4.382 | 2.432 | .23376 | .486 | .04676 | .04681 | .99890 | .2060 | 4.380 | 7.2940 | 4.866 | 7.7060 | -3.894 |
| 10 | 4.997 | 2.981 | .20618 | .596 | .04124 | .04129 | .99915 | .2067 | 4.997 | 9.7933 | 5.593 | 10.2067 | -4.401 |
| 15 | 5.942 | 3.903 | .16546 | .781 | .03309 | .03315 | .99945 | .1971 | 5.942 | 14.8029 | 6.723 | 15.1971 | -5.161 |
| 20 | 6.619 | 4.651 | .13452 | .930 | .02690 | .02676 | .99964 | .1771 | 6.619 | 19.8230 | 7.549 | 20.1770 | -5.689 |
| 25 | 7.091 | 5.257 | .10873 | 1.051 | .02175 | .02181 | .99976 | .1546 | 7.091 | 24.8454 | 8.142 | 25.1546 | -6.040 |
| 30 | 7.384 | 5.742 | .08595 | 1.148 | .01719 | .01716 | .99985 | .1268 | 7.384 | 29.8732 | 8.532 | 30.1268 | -6.236 |
| 35 | 7.496 | 6.120 | .06498 | 1.224 | .01299 | .01309 | .99991 | .0982 | 7.496 | 34.9018 | 8.720 | 35.0982 | -6.272 |
| 40 | 7.435 | 6.394 | .04507 | 1.279 | .00901 | .00901 | .99996 | .0669 | 7.435 | 39.9331 | 8.714 | 40.0669 | -6.156 |
| 45 | 7.215 | 6.571 | .02559 | 1.314 | .00512 | .00512 | .99999 | .0369 | 7.215 | 44.9631 | 8.529 | 45.0369 | -5.901 |
| 50 | 6.858 | 6.651 | .00607 | 1.330 | .00121 | .00121 | .99999 | .0083 | 6.858 | 49.9917 | 8.188 | 50.0083 | -5.528 |
| 55 | 6.387 | 6.631 | -.01404 | 1.326 | -.00281 | -.00281 | .99999 | -.0179 | 6.387 | 55.0179 | 7.713 | 54.9821 | -5.061 |
| 60 | 5.820 | 6.508 | -.03537 | 1.302 | -.00707 | -.00707 | .99999 | -.0373 | 5.820 | 60.0373 | 7.122 | 59.9627 | -4.518 |
| 65 | 5.173 | 6.274 | -.05887 | 1.255 | -.01177 | -.01177 | .99993 | -.0608 | 5.173 | 65.0608 | 6.428 | 64.9392 | -3.918 |
| 70 | 4.468 | 5.913 | -.08610 | 1.183 | -.01722 | -.01722 | .99985 | -.0768 | 4.468 | 70.0768 | 5.651 | 69.9232 | -3.285 |
| 75 | 3.731 | 5.401 | -.12058 | 1.080 | -.02411 | -.02410 | .99971 | -.0899 | 3.731 | 75.0899 | 4.811 | 74.9101 | -2.651 |
| 80 | 2.991 | 4.673 | -.18036 | .935 | -.03607 | -.03605 | .99935 | -.1077 | 2.991 | 80.1077 | 3.926 | 79.8923 | -2.056 |
| 85 | 2.252 | 3.607 | -.23430 | .721 | -.04686 | -.04680 | .99890 | -.1054 | 2.252 | 85.1054 | 2.973 | 84.8946 | -1.531 |
| 90 | 1.512 | 2.452 | -.24521 | .490 | -.04904 | -.04898 | .99879 | -.0740 | 1.512 | 90.0740 | 2.002 | 89.9260 | -1.022 |
| 95 | .772 | 1.226 | -.24521 | .245 | -.04904 | -.04898 | .99879 | -.0378 | .772 | 95.0378 | 1.017 | 94.9622 | -.527 |
| 100 | .032 | 0 | -.24521 | 0 | -.04904 | -.04898 | .99879 | -.0157 | .032 | 100.0000 | .032 | 100.000 | -.032 |

EXPLANATION OF THE DIFFERENT STEPS IN TABLE 5

Column

1 y 2 - Ordinates for 632A015 Basic Thickness from page 206 of TR903

3 - Ordinates for mean line a=0.8, Cli=1.0 from page of TR903

4 - Slopes for Mean Line a=0.8, Cli=1.2 from page 210 of TR903

5 and 6 - As the desired airfoil $63_2$A215 has a Cli=.2 the values of columns 3 and 4 are multiplied by .2 to obtain column 5 and 6 respectively.

7 and 8 - Knowing "tan O", the values of "sin O" and "cos O" are found in a trigonometric table.

⑨ - $y_t \sin\theta$ = =②x⑦

⑩ - $y_t \cos\theta$ = =②x⑧

⑪ - $x_u = x - y_t \sin\theta$ = =①-⑨

⑫ - $y_u = y_c' + y_t \cos\theta$ =⑤+⑩

⑬ - $x_l = x + y_t \sin\theta$ = =①+⑨

⑭ - $y_l = y_c' - y_t \cos\theta$ ==⑤-⑩

## 1-13 WING AREA DETERMINATION

The wing area is a function of the landing speed. In Table 6, the landing speeds or stalling speeds of several well known airplanes are listed. Unfortunately, some manufacturers list their landing speed as stalling speed. In "Airplane Performance Stability and Control" by Perkins & Hage, (Ref. 10), Page 199, the landing speed is estimated 15 per cent higher than the stalling speed.

TABLE 6 - Landing Speeds (VL)

| Airplane | Vl (MPH) | Airplane | Vl (MPH) |
|---|---|---|---|
| Piper PA-11 | 37 | Piper Colt | 54 |
| Aeronca Champion | 38 | Smith Miniplane | 55 |
| Cessna 140 | 41 | Cessna 182 | 56 |
| Mooney Mite | 43 | Stits Skycoupe | 57 |
| Globe Swift | 43 | Nesmith Cougar | 59 |
| Luscombe Silvaire | 45 | Beech Bonanza | 60 |
| Fournier Ercoupe | 48 | Meyers 200 | 62 |
| Cessna 150 | 50 | Witman Tailwind | 65 |
| Navion | 53 | Heuberger Sizzler | 68 |

$$V_L = 1.15\ Vs$$

Thedesiredstall speed for the Laminar is 50 mph, therefore, the landing speed will be:

$$VL = 1.15 * 50 = 57.5 \text{ mph}$$

This value seems fairly conservative compared with the values listed in Table 6.

The lift equation at sea level is:

$$L = W = \frac{S_W \times V^2 \times C_L}{390}$$

And solving for speed "V"

$$V = \sqrt{\frac{W \times 390}{S_W \times C_L}}$$

Where:

$S_W$ = Wing area in square feet

V = Speed in mph

$C_L$ = Wing lift coefficient

Looking at the last equation, we could do several things to reduce the landing speed.

First - Reduce Weight (W), which is alwais desirable, rather difficult.

Second - Increase Wing Area (Sw). This is possible, but it will be add weight and drag.

Third - Increase Lift Coefficient (Cl). This is probably the most appropiate term to work on. Airfoil Selection and high lift devices are the ways to do it.

In the General Characteristics, Page 3, we listed "Flaps" in the High Lift Devices. Assuming that partial span flaps will be used, their effect on the on the Clmax will be calculated next.

A very good source of information on every kind of flaps is the BritishAeronautical Research Cmmcil Report and Memorandun No. 2622, The Aerodynamic Characteristics of Flaps", by A.D. Young (Ref. 9). In page 10 of this report we founf an equation to calculate the list increment due to plain flaps.

$$\Delta C_L = \frac{F(A)}{F(6)} \cdot \lambda_1 \cdot \lambda_2$$

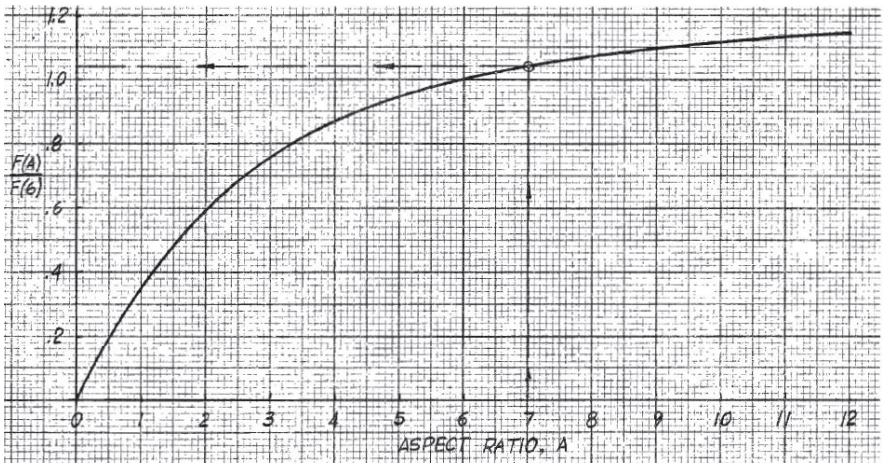


[illegible]

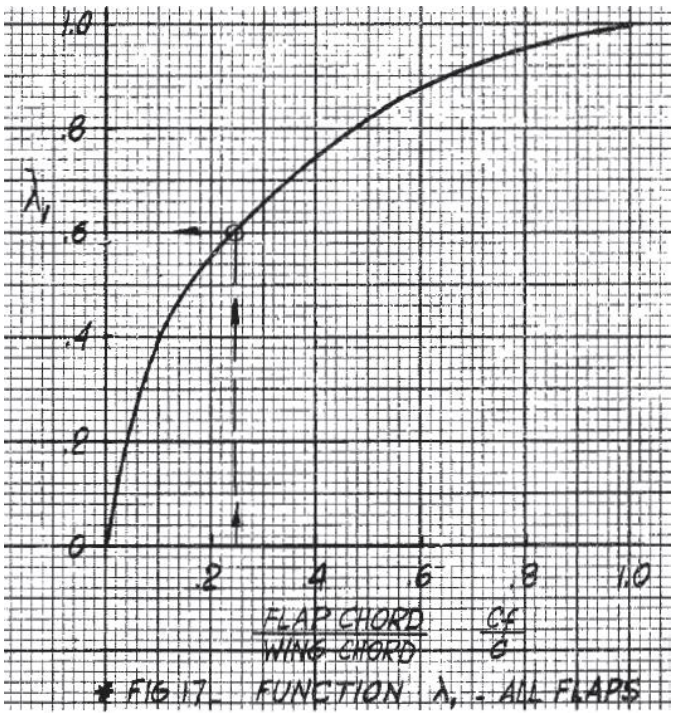


$$\frac{c_f}{c} = \frac{\text{flap chord}}{\text{wing chord}} = .25 \quad \text{Figure 17} \rightarrow$$

$$\rightarrow \lambda_1 = .6$$

Note: Figures 16, 17, 18 and 19 are reproduced from R & M No. 2622 with the permission of the Controller of Her Britanic Majesty Stationery Office.

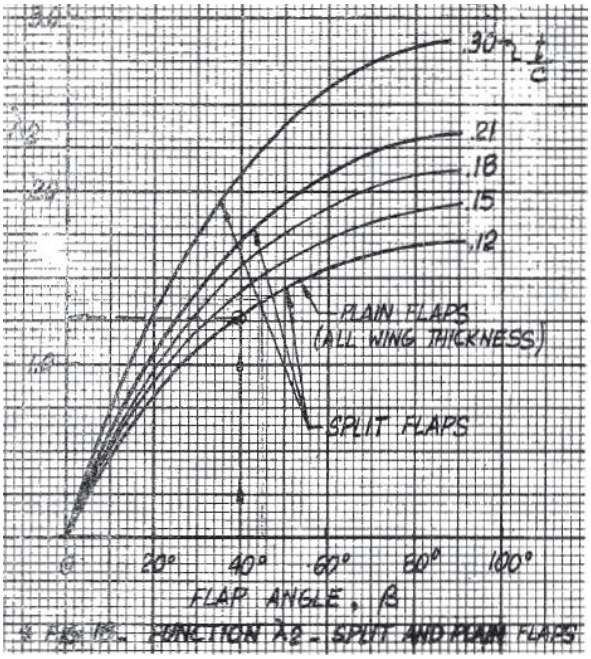


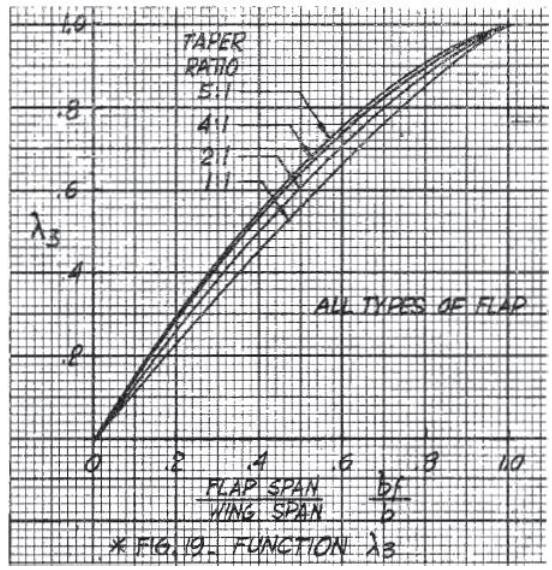


$\beta \cong 40°$ (flap angle) ⟶ Figure 18 $\lambda_2 = 1.27$

Replacing in the equation:

$$\Delta C_L = 1.04 \times .6 \times 1.27 = .792 \cong .79$$

The flap does not affect the whole wing; therefore, the lift increment just calculated must be reduced accordingly to the flap span. On page 11 of the same British report we found:

$$\Delta C_L' = C_L \times \lambda_3$$

$$\frac{b_f}{b} = \frac{\text{flap span}}{\text{wing span}} \cong .6 \longrightarrow \text{Figure 19} \rightarrow \lambda_3 = .67$$

$$\therefore \Delta C_L' = .79 \times .67 = .53$$

During the flare-out, the tail is producing a down load which should be subtracted from the wing lift, but the wing in proximity of the ground will develope a higher Clmax. These two opposite effects are approximately of similar magnitude; therefore, we assume that they cancel each other.

The R.N. for stalling speed is calculated next.

$$R.N. = 6380 \times c \times V_S$$
$$= 6380 \times 4.17 \times 73.2 =$$
$$= 1{,}950{,}000$$

c = mean aerodynamic chord

= 50" = 4.17 ft.

$V_S$ = 50 mph

= 50 x 1.466 = 73.2 fps

From Figure 11 on page 22, the Clmax for the plain $63_2615$ airfoil at R.N. = 6,000,000 and standard roughness is

Plain Airfoil Clmax = 1.38

For the calculated R.N., this value wil be reduced.

Also on Figure 11, we can read for the $63_2615$ plain airfoil (smmoth):

| R.N. | Clmax |
|---|---|
| 9,000,000 | 1.66 |
| 6,000,000 | 1.58 |
| 3,000,000 | 1.46 |

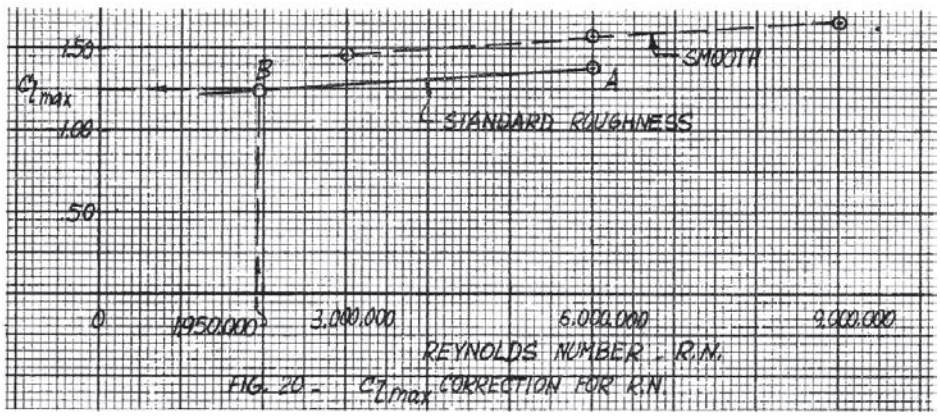

FIG. 20 - $C_{L_{max}}$ CORRECTION FOR R.N.

In Figure 20, the three values of Clmax for the smooth airfoil are plotted. Point A is the singlevalue for the rough airfoil (Clmax=1.38). Assuming that the decrease of Clmax with reduction in R.N. is straight, a line is traced at point "A" parellel to the "smooth line", and by extrapolation point "B" is found at a R.N. = 1,950,000. At this point the Clmax will be 1.25.

To the corrected value of Clmax for the plain airfoil, we can now add the flap contribution calculated before.

$$\text{Flapped wing } C_{L_{max}} = \text{Plain Wing } C_{L_{max}} + \Delta C_L{}'_{(flap)}$$

Clmax = 1.25 + .53 = 1.78

Now we have all ingredients to calculate the wing area. The lift equation on page 28 can be solved for wing area:

$$S_W = \frac{390 \times W}{V^2 \times C_{L_{max_f}}} = \frac{390 \times 1300}{50^2 \times 1.78} = 114 \text{ sq. ft.}$$

A word of caution: The previous calculations are based mostly on wind tunnel data which are greatly affected by scale effects, tunnel turbulence and model finish. No adequate theories have been developed to correlate and explain the

scatter in experimental data. Therefore, the calculated values could be off by a margin of plus or minus 10%, depending on the experience of the aerodynamicist.

**1-14 ASPECT RATIO DETERMINATION**

Aspect Ratio and Induced Drag are intimately related subjects. The significnce of Aspect Ratio is well known, but the concept of Induced Drag might be rather obscure.

Induced Drag means "Drag Induced by the Lift," contrary to Parasite Drag, wich could be produced by non-lifting bodies such as landing gear.

A wing has both classes of drag, "Parasite" any time when moving, and "induced" when lifting.

A car moving on a concrete road will have "Parasite" Drag, generated by wind against the body. The engine has to produce a certain power to move the car at a certain speed. The same car riding on loose sand will sink continuously and will require a greater power to move at the same speed. This increase in power is due to Induced Drag. In an airplane, the wing is continuously supporting the weight on sinking air, and in fact has to climb out of the sinking air in order to maintain altitude. If the same car were with wider tires, it would ride much easier over the sand.

The wider tires do not sink so much. Another way to get out of trouble with standard tires is to go faster . The same thing happens with the airplane; a high Aspect Ratio wing; or flying faster will reduce the Induced Drag. Now that we are all convinced that a high Aspect Ratio is beneficial, the question is how much?

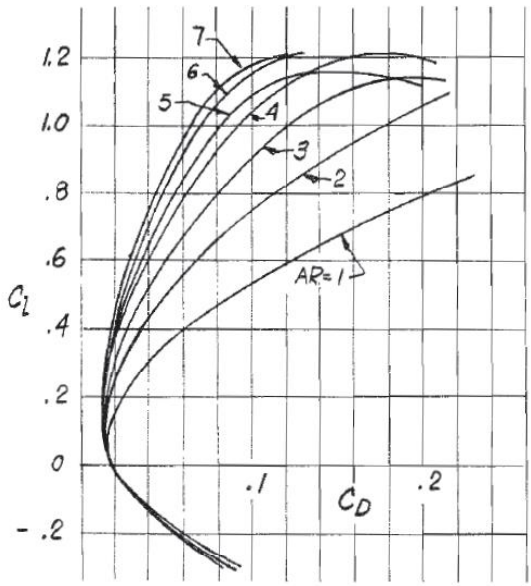


Figure 21 - Effect of the Aspect Ratio on Wing Polar

In Figure 21, the polar diagrams for a series of wings with different aspect ratios are shown. It can be seen that there is not too much difference between AR=7 and AR=6 curves, but certainly there is a great difference between AR=2 and AR=1.

For light conventional airplanes a good compromise aspect ratio is about 7. A smaller aspect ratio will result in excessive Induced Drag, penalizing mostly the climb and ceiling. On the other hand, aspect ratios over 7 result in excessively reduced wing chords. When we calculated the Stalling Speed, the Reynolds Number effect on Clmax was analyzed and we remember that the smaller the R.N., more reduction in Clmax. Remember that R.N. is a direct function of the wing chord. From structural view point, the advantages of a small aspect ratio are double; first, because a larger chord will provide a proportionally larger depth for the wing spars, second, a shorter wing represents smaller bending moments, which in turn requires lighter spars.
We calculated the wing area as 115 sq. ft.

The equation for A.R. is:

$$AR = \frac{b^2}{S_W}$$

Solving for b (wing span):

$$b = \sqrt{AR \times S_W}$$

And substituting values:

$$b = \sqrt{7 \times 115} = \sqrt{805} = 28.3 \text{ ft.}$$

A round number will be easier to remember, so let us make the span 28 ft.
The average wing chord is calculated next:

$$c = \frac{S_W}{b} = \frac{115 \text{ ft.}^2}{28 \text{ ft.}} = 4.12 \text{ ft.} = 49.3''$$

Since we have no taper, c is constant along the span.

Again, a round number will be more convenient, so we make the chord c = 50".

Based on these rounded figures, we recalculate the wing area.

$$S_W = b \times c = 28 \text{ ft.} \times \frac{50 \text{ in.}}{12} = 28 \times 4.17 = 116 \text{ sq. ft.}$$

And the final aspect ratio will be:

$$AR = \frac{b^2}{S_W} = \frac{28^2}{116} = 6.76$$

In the Laminar airplane it was decided to use wing tip fuel tanks, mostly based on safety reasons. By making the tank of elliptical shape (see Figure 22), the height is increaced. A relation of 2 to 1 was selected for the mayor and minos axis, resulting in a maximum height of 14.8". The fuel tank is aerodynamically equivalent to an end plate.

End-plates increase the wing aspect ratio and this increase can be calculated with the following equation from "Fluid-Dynamic Drag" by S.F. Hoerner, (Ref. 11) Page 7-10, equation 18.

$$\Delta A_i \cong A \times 1.9 \times \frac{h}{b}$$

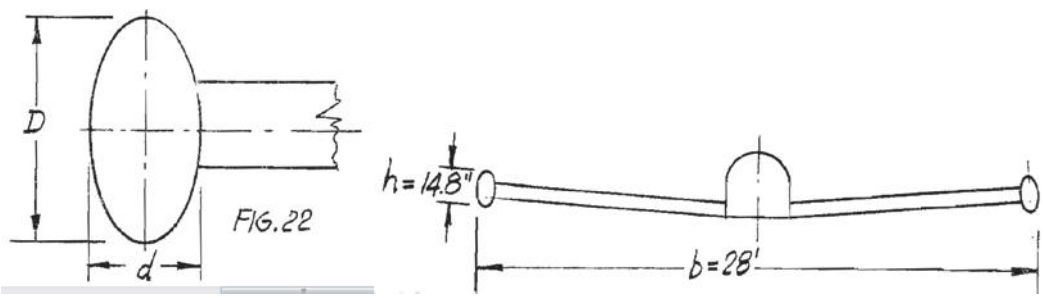


Fig. 23

The corrected aspect ratio will be:

$$A_i = A + \Delta A_i = 6.76 + .57 = 7.33$$

Other equations given by Hoerner are based on the area of the end plate:

$$\Delta A_i = A \times 1.1 \times \frac{S_{2E}}{S_W}$$

Where $S_{2E}$ = Area of 2 end plates

$S_W$ = Wing area

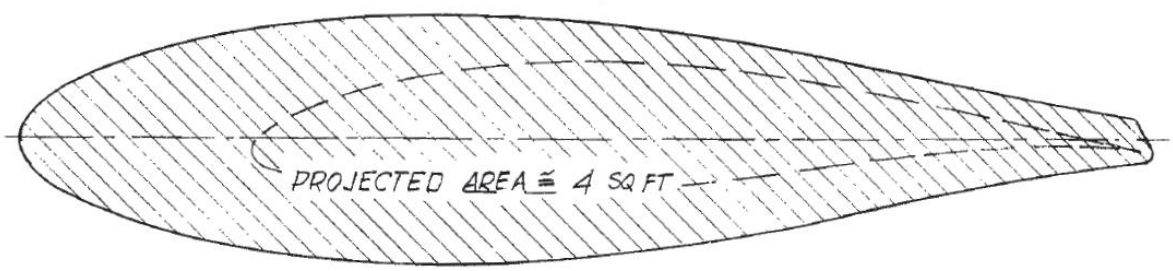


FIG. 24

$S_{2E}$= 4 * 2 = 8 sq.ft.

$$\Delta A_i = 6.76 \times 1.1 \times \frac{8}{116} = .51$$

The corrected aspect ratio will be:

$$A_i = A + \Delta A_i = 6.76 + .51 = 7.27$$

The two equations are in good agreement, we can use:

ARi=7.30 for future calculations

1-15 WHY FLAPS ?

From a constructional view point, it is easier, in this project, to make the wing with flaps than without them. The aileron and flap ribs will be ????? the same, otherwise a special form block would be necessary for continuous ribs. Following the same thinking, both aileron and flaps are piano-hinged at the bottom skin.

The proposed flap will be plain type, wich is the simplest, but not the most effective. The increase of Clmax provided by this type of flap is relatively small (ΔClmax=.53), but still will provide a landing speed reduction calculated as 10 mph.

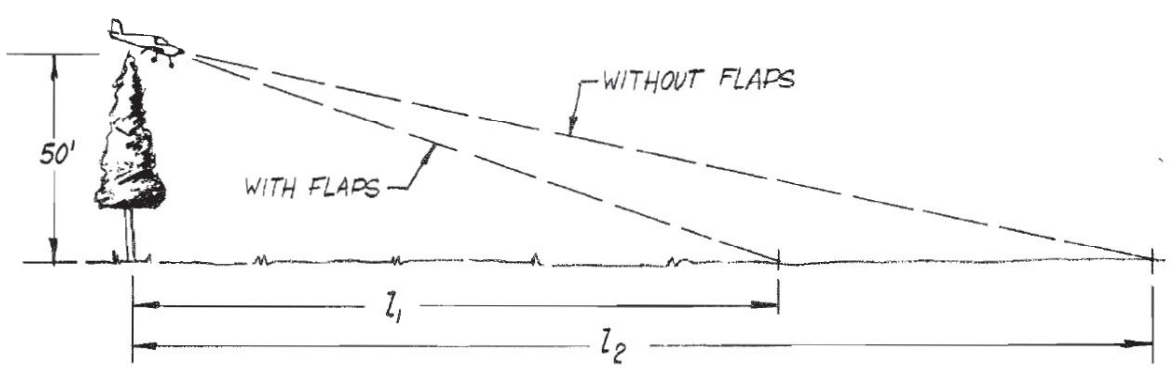


FIG 25 - GLIDE PATHS

The second advantage of wing flaps is the increase of drag, resulting in a steeper glidepath, as shown in Figure 25. Thr landing distance over an obstacle of 50' can be calculated with a simplified equation givenby agard Report No. 81 (Some Factors Affecting the Field Lenght of STOL Airplanes - Ref. 19).

$$S_L = 160 \sqrt{\frac{W/S}{c_{l_{max}}}} + \frac{510\ W/S}{a \cdot c_{l_{max}}} \quad \text{(ft)}$$

Where:

$W/S = \frac{1300}{116} = 11.2$ lbs/sq. ft.

$C_{L_{max}} = 1.25$ (Plain Wing)

$1.78$ (Flapped Wing)

$a = -7$ ft/sec$^2$ (Ground Run deceleration)

Then for the airplane without flaps:

$$S_L = 160 \sqrt{\frac{11.2}{1.25}} + \frac{510 \times 11.2}{7 \times 1.25} = 480 + 656 = 1136 \text{ ft.}$$

And for the airplane with flaps:

$$S_L' = 160 \sqrt{\frac{11.2}{1.78}} + \frac{510 \times 11.2}{7 \times 1.78} = 402 + 498 = 900 \text{ ft.}$$

**1-6 WING AERODYNAMIC CHARACTERISTICS**

The section aerodynamie characteristics of the $63_2615$ airfoil were given in Figure 11. These curves represent an Infinite Aspect Ratio wing and cannot be used directly to determine the actual wing characteristics. Corrections based on Aspect Ratio should be made. For preliminary design, only the lift curve with flap down and flap up are necessary.

In Figure 26 the section lift curves for the $63_2615$ (R.N.=6,000,000 -- Standard Roughness) are reproduced. The slope of the lift curve can be determined from this plot. Within the straight portion of the curve, select a convenient angle of attaek increment ($\Delta\alpha_0$=10°). Read-out the corresponding increment in the lift coefficient; in this case, $\Delta Cl$=1.05. The slope for the section (Infinite Aspect Ratio) will be:

$$a_o = \frac{\Delta c_l}{\Delta \alpha_o} = \frac{1.05}{10} = .105$$

The lift curve slope for a Finite Aspect Ratio can be calculated with the following equation from NACA TR665,"Calculation of the Aerodynamic Characteristics of Tapered Wings with Partial Span Flaps" (Ref. 14).

$$a = f \frac{a_o}{1 + \left(\frac{57.3\ a_o}{\pi A}\right)}$$

The slope lift curve factor "f" is plotted in Figure 27 also from NACA TR665.

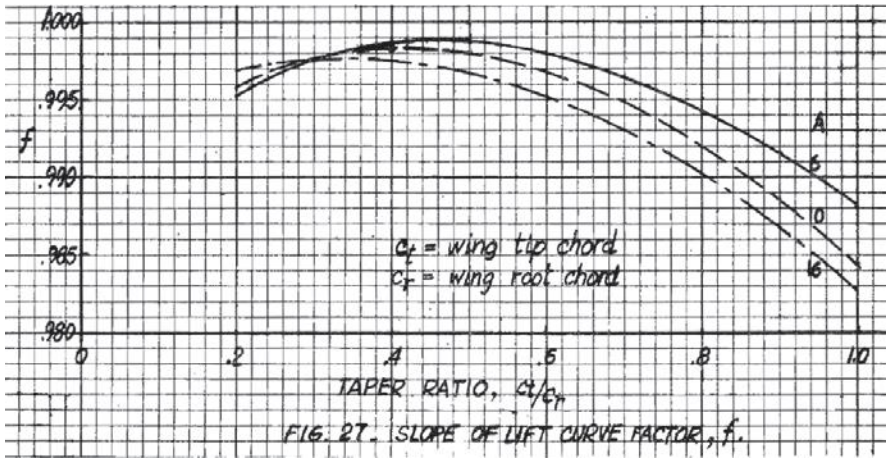


FIG. 27. SLOPE OF LIFT CURVE FACTOR, f.

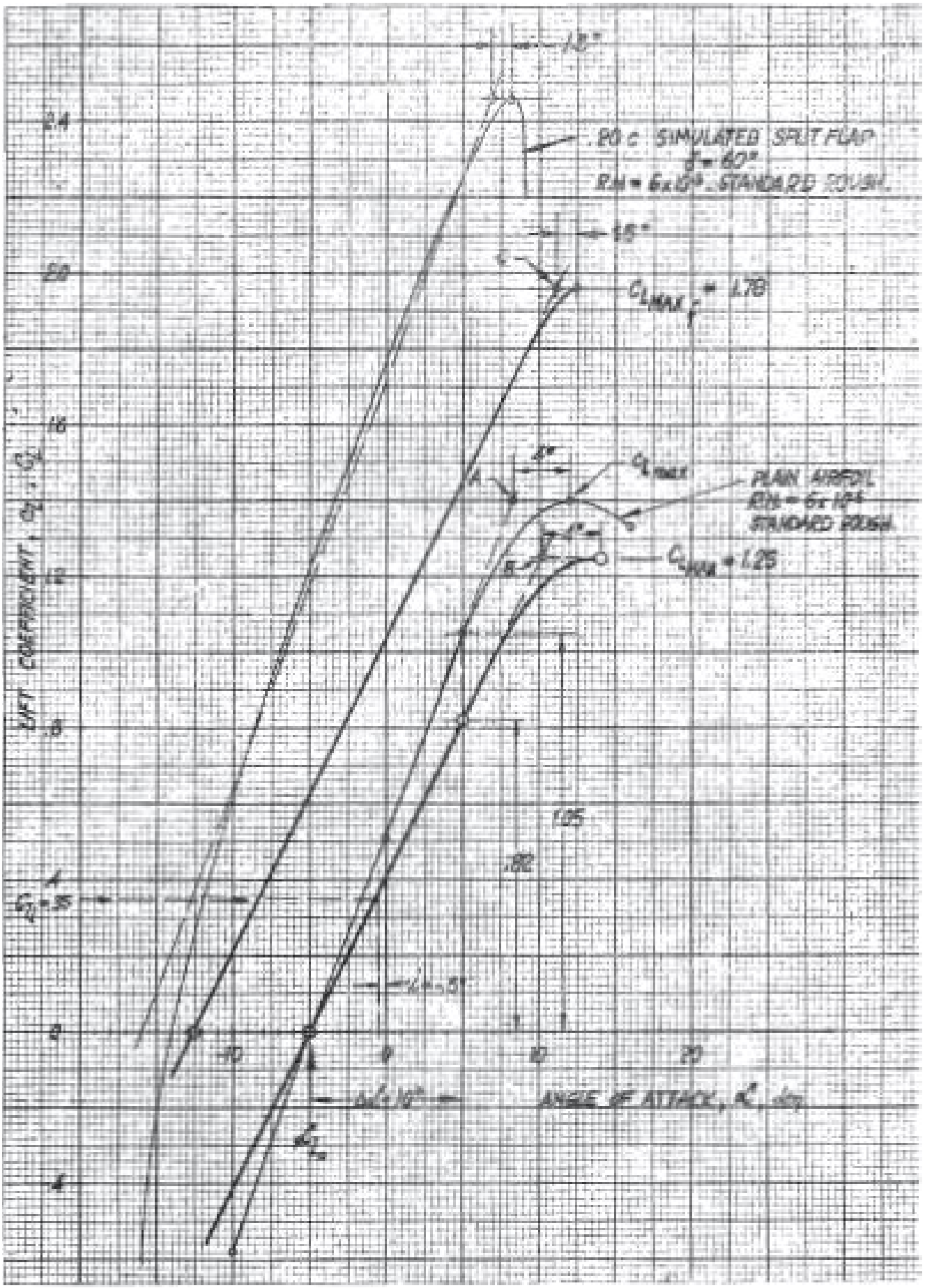


FIGURE 26 - Aerodynamich characteristic of wing

For the Laminar PL-1 rectangular wing : (from Figure 27).

$$\left.\begin{array}{l} c_t/c_r = 1 \\ A = 7.3 \end{array}\right\} \quad f = .988$$

Then:

$$a = .988 \frac{.105}{1 + \left(\frac{57.3 \times 1.05}{3.14 \times 7.3}\right)} = .082$$

And from the lift curve slope equation, solving for $\Delta Cl$

$$\Delta c_l = a \times \Delta\alpha$$

And if we select again $\Delta\alpha = 10°$ :

$$\Delta Cl = .082 * 10 = .82$$

These values areplotted on Figure 26. Note that the angle for zero lift ($aC_{10} = -5°$) does not change with aspect ratio. Then, the straight portion of the lift curve could be traced. The curved upper part of the curve could be approximated with the following method.

Project the straight portion of the section lift curve upo to the level of Clmax = 1.40, (Point "A"). Measure the distance in degrees between Point "A" and Clmax, which is 4° for this airfoil.

On page 31, we found that the CLmax for the plain wing was 1.25. Therefore, trace a line at this level. Project the straight nortion of the lift curve up to intersect the Clmax line; obtain point "B". Measure 4° from point "B" to locate the point for Clmax. Using the same curve as used for the section lift curve, complete the wing lift curve.

Somewhat similar procedure can be used to trace the flapped wing lift curve. Some simplifying assumptions could be made: (1) The flapped airfoil lift curve is parallel to the unflapped airfoil lift curve. This is substantiated in Figure 26, where the curve for the $63_2615$ with a split flap deflected 60° is shown. The dashed line was traced parallel to the plain airfoil slope.

The zero lift angle for the flapped airfoil a10f should be calculated first.

In Figure 28, a series of curves are plotted, wich gives the displacement of the zero lift angle ($\Delta a_{10}$) as a function of flap chord and angle for plain flap.

$$\left.\begin{array}{l} \text{For } c_f/c = .25 \\ \text{and } \delta_f = 40° \end{array}\right\} \xrightarrow{\text{Fig. 28}} \Delta\alpha_{1_0} = -12.5°$$

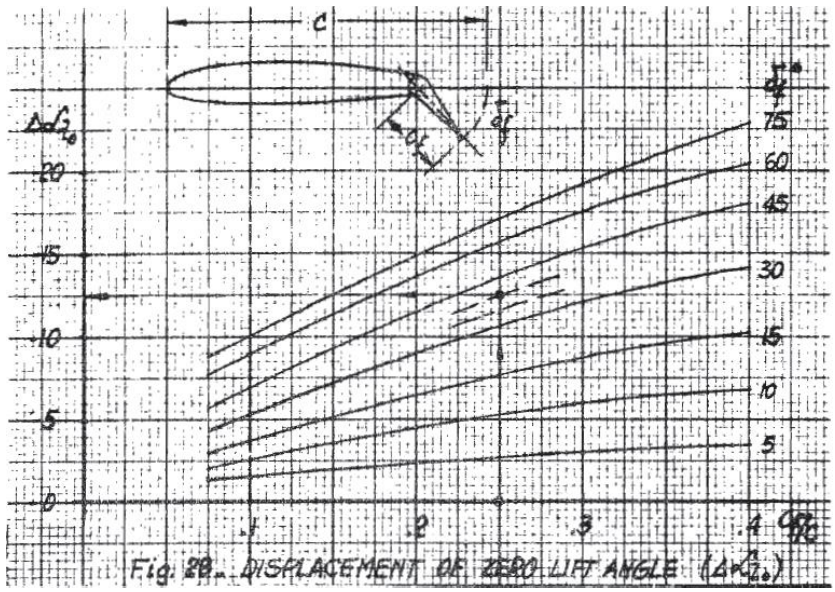

Fig. 28 - DISPLACEMENT OF ZERO LIFT ANGLE ($\Delta\alpha_{l_0}$)

The calculated Δal0 is for a wing with full span flap. For a partial span flap, the displacement will be proportional. Therefore

$$\Delta\alpha'_{l_0} = \frac{b_f}{b} \times \Delta\alpha_{l_0} = .6 \times -12.5 = -7.5^\circ$$

Finally, the zero lift angle for the partially flapped wing will be:

$$\alpha_{l_{0_f}} = \alpha_{l_{0_f}} + \Delta\alpha_{l_{0_f}} = -5^\circ - 7.5^\circ = -12.5^\circ$$

This point is plotted in Figure 26 and a straight line parallel to the plain wing lift curve is traced.

The maximum lift coefficient for the flapped wing was found on page 31.

Clmax = 1.78

A line is traced at this level and poi.nt "C" is located. The shift of the Clmax point for the $63_2615$ with split flap is 1.5°. This value could be used to locate the CLmax point for the partially flapped wing.

On page 24, the Design Lift Coefficient was calculated:

Clcruise = .35

The corresponding angle of attack from Figure 26 is:

a = -.5° and is also the wing inciderce (i) with respect to the fuselage horizontal reference line. A slightly smaller incidence was used in the PL-1, corresponding to a Vc = 120 mph.

///

The angle of attack for landing should be calculated next. It can be seen in Figure 26 that the angle of attack for Clmax with plaps up (a=14°) is greater than the one with flaps-down (af=12.5°). Therefore, the landing gear position and tail clearance should be based in the flap-up attitude. The "Ground Effect" on the lift curve slope shoul be calculated first.

A wing flying at heights less than one semi-span above the ground will have less induced drag than at higher altitudes. The air is compressed between the wing and the ground; and the airplane virtually "floats". This effect is equivalent to an increase in Aspect Ratio, which in turn represents a change in the lift curve slope as we have seen before.

Figure 29 is reproduced from NACA WR L-95 Report (Ref. 15).

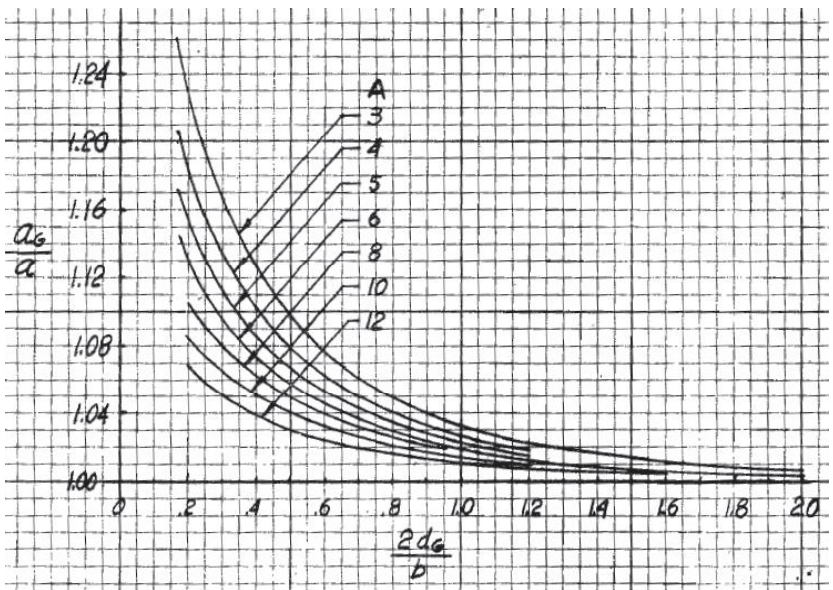


FIG. 29. GROUND EFFECT ON LIFT-CURVE SLOPE

Where:

aG is the lift curve slope in ground effect

a is the lift curve slope at altitude

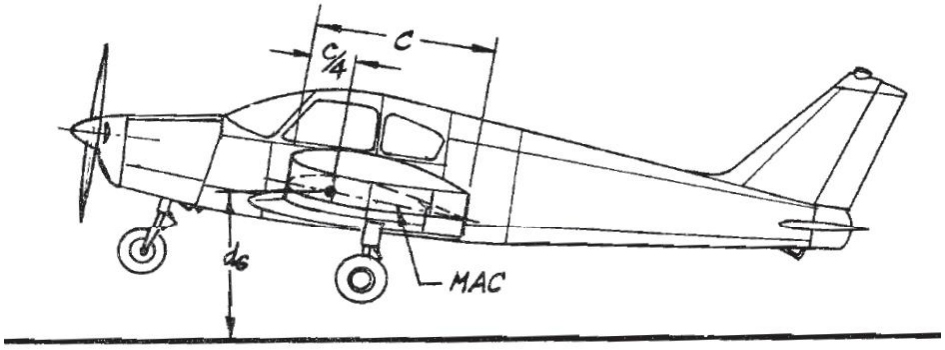


FIG. 30. GROUND DISTANCE $d_G$

Just before touch-down, the distance from the ground to the quarter chord point on the mean aerodynamic chord (MAC) may be assumed to be dg = 35".

Then:

$$\frac{2\ dG}{b} = \frac{2 \times 35''}{336''} = .21 \xrightarrow{\text{Figure 29}} \frac{a_g}{a} = 1.10$$

The change in angle of attack could be approximated by the following equation:

$$\Delta\alpha = \frac{C_L}{a} \left( \frac{1}{\frac{a_g}{a}} - 1 \right)$$

$$\Delta\alpha = \frac{1.25}{.082} \left( \frac{1}{1.10} - 1 \right) =$$

$$= 15.2\ (.91-1) = 15.2 \times -.09$$

$$= -1.36^\circ \cong -1.4^\circ$$

Where: $C_L = 1.25$

$a = .082$

$\frac{a_g}{a} = 1.10$

[illegible] [illegible] [illegible] [illegible] [illegible] [illegible] [illegible] [illegible] [illegible] [illegible] [illegible] [illegible] [illegible] [illegible] [illegible] [illegible] [illegible]

$$\alpha_g = \alpha + \Delta\alpha = 14.0^\circ - 1.4^\circ = 12.6^\circ$$

## 1-17 EMPENNAGE DIMENSIONING

The tail surfaces of an airplane have to meet two basic requirements: stability and control. The design of tail surfaces, the determination of their size, position, angle of incidence is not an easy problem. The effects of factors such as slipstream, downwash, interference, C.G. position, Reynolds Number, and many others, complicate not only the problem, but also obscure the basic concepts for the amateur designer. Even today, with the great amount of research data, the analytical approach for the tail surface design should be complimented with Wind Tunnel testing mostly when the design is unconventional.

The amateur designer willing to tackle the design of a Delta or Tail-less airplane will be foolish to risk his life without at least taking some college courses in Stability and Control, run some wind tunnel testing and have the data analyzed by experts.

For conventional configurations, the problem is well defined, but still complex. The reading of some textbooks such as Airplane Performance Stability and Control by Perkins & Hage is strongly recommended. For this preliminary design phase, *we* do not need to dip into differential equations, it will be enough to use the old Egyptian method of "follow the leader".

Let's have some statistics. But first, with the aid of Figure 31, some terminology will be defined.

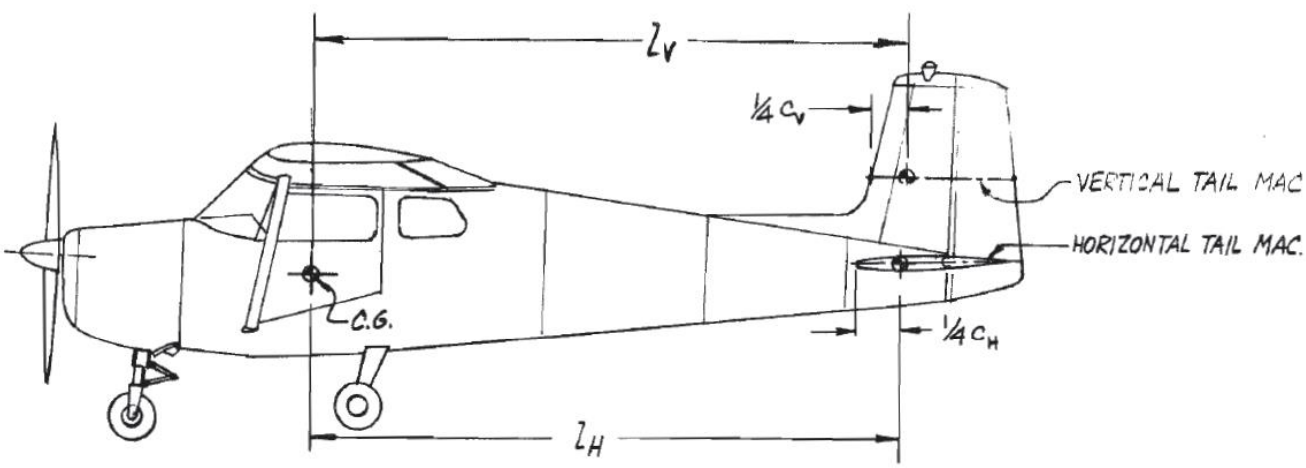


FIG. 31 - TAIL LENGHTS

If *we* multiply the Area of the Horizontal Tail in ft.$^2$ by the distance between the C.G. and the quarter chord point of the tail ($l_H$) in ft., we obtain "ft.$^3$". And cubic feet are used to measure volumes. Therefore, the product ($S_H$ x $l_H$) is called Horizontal Tail Volume just for convenience.

Same with the Vertical Tail:

$$S_V * l_V = \text{Vertical Tail Volume (ft.}^3\text{)}$$

The old question of "how much tail area" now should be changed to "how much tail volume". This is more convenient because it also considers the tail length. Comparisons based on tail area only, are misleading because 10 sq. ft. at the end of a short fuselage will not have the same effect than 10 sq. ft. at the end of a one. But on the other hand, a 10 ft.$^2$ tail at 10 ft. from the C.G. will have nearly the same effect as 5 ft.2 at 20 ft. from the C.G. Both have the same "tail volume".

$$10 \text{ ft.}^2 * 10 \text{ ft.} = 100 \text{ ft.}^3$$

$$5 \text{ ft.}^2 * 20 \text{ ft.} = 100 \text{ ft.}^3$$

The bigger the f!Tail Volume" the greater will be the airplane stability, which is equivalent to allowable C.G. movement. An airplane with very small C.G. movement will need a relatively small tail volume. A conventional two place airplane, with the occupants seating over the C.G., and the fuel also near the C.G. will require less tail volume than a transport airplane, where a passenger could be seated far away from the C.G.

It is always convenient to use non-dimensional coefficients for comparative purposes. Therefore, if we divide the "Tail Volume" by another volume such as Wing Area (ft.$^2$)* Wing Chord (ft.)= ft.$^3$, we obtain a dimensionless expression called Volume Coefficient.

$$\frac{S_H \times l_H}{S_W \times c} = \bar{V}_H \quad \text{(Horizontal Tail Volume Coefficient)}$$

And for the vertical tail we could divide by the product of (Wing Area * Wing Span) and obtain another non-dimensional expression:

$$\frac{S_V \times l_V}{S_W \times b} = \bar{V}_V \quad \text{(Vertical Tail Volume Coefficient)}$$

In this manner, both tail surfaces are related to the wing area, but the horizontal tail is also related to the wing chord which has a great importance on the airplane longitudinal stability and control, while the vertical tail is related to the wing span which has a great significance on directional stability and control.

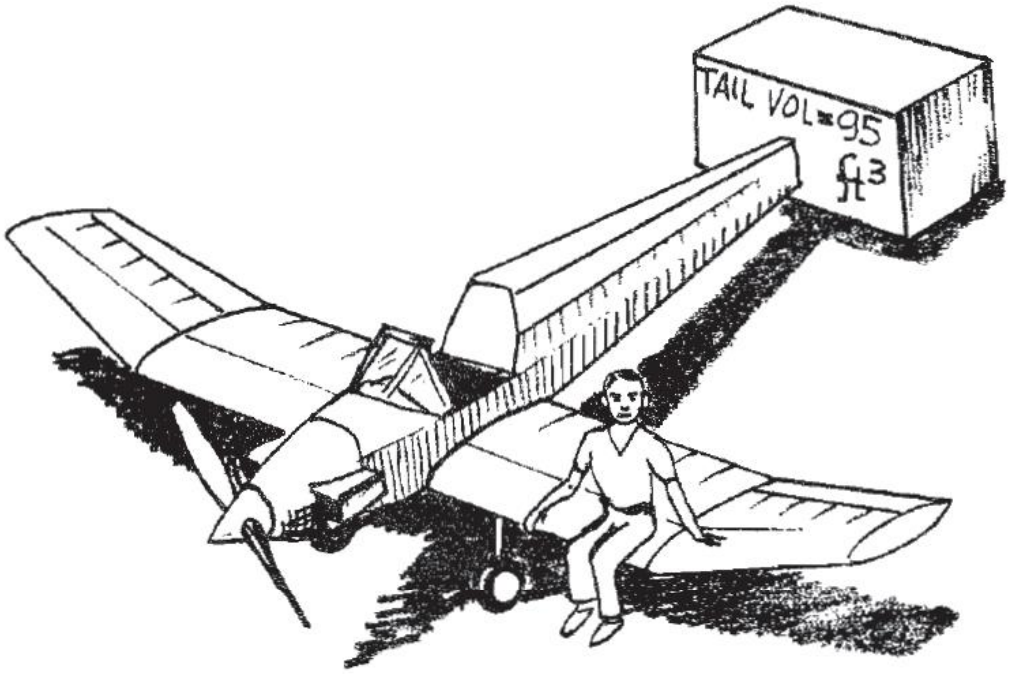

In Table 7 are calculated Horizontal Tail Volume Coefficients for some well-known airplanes. The Piper J3 has the lower value ($V_H$ = -340) wile the Navion has a higher ($V_H$ = .692). These extreme represents a great spread.

**TABLE 7**

**HORIZONTAL TAIL STATISTICS**

| Airplane | Sw(ft2) | c(ft) | SH(ft2) | SH/SW(%) | lH(ft) | lH/c | VH |
|---|---|---|---|---|---|---|---|
| Piper j3 | 178.5 | 5.33 | 24.5 | 13.7 | 13.2 | 2.47 | .340 |
| Piper Cherokee | 160.0 | 5.08 | 23.0 | 14.4 | 13.1 | 2.57 | .371 |
| Cessna 140 | 159.6 | 4.90 | 23.3 | 14.6 | 12.5 | 2.55 | .374 |
| Cessna 150 | 160.0 | 4.95 | 23.7 | 14.8 | 13.0 | 2.63 | .390 |
| Shin 2150-A | 144.0 | 4.80 | 20.8 | 14.5 | 12.7 | 2.64 | .392 |
| Thorp T-18 | 86.0 | 4.17 | 14.2 | 16.5 | 10.4 | 2.50 | .412 |
| Luscombe Silvaire | 140.0 | 4.17 | 21.2 | 15.5 | 11.8 | 2.84 | .442 |
| Nesmith Cougar | 82.5 | 4.00 | 14.0 | 17.0 | 11.3 | 2.83 | .480 |
| Emeraude CP 301 | 118.0 | 4.33 | 24.0 | 20.3 | 12.1 | 2.79 | .568 |
| Cessna 170 | 175.0 | 4.92 | 34.0 | 19.5 | 14.6 | 2.97 | .580 |
| Navion | 184.0 | 5.22 | 42.8 | 23.3 | 15.5 | 2.96 | .692 |

$S_W$ = Wing Area

$\bar{c}$ = Wing M.A.C.

$S_H$ = Tail Area

$l_H$ = Tail Length

$\bar{V}_H$ = Tail Volume Coefficient

Assuming that the C.G. is located at 25% M.A.C., the following generalized criteria for VH selection could be used:

**TABLE 8**

**TAIL VOLUMES**

| Typical Applications | Tail Volume $V_H$ | Stability Margin | Elevator Area (% of $S_H$) | Control Effectiveness |
|---|---|---|---|---|
| Split Flaps | .300 | Small | 30 | Very poor |
| Small Clmax | | | 50 | Poor |
| Small Cmac | | | * 100 | Fair |
| Plain Flaps | .450 | Average | 30 | Poor |
| Moderate Clmax | | | 50 | Fair |
| Moderate Cmac | | | * 100 | Good |
| Slotted Flaps | .700 | Large | 30 | Fair |
| High Clmax | | | 50 | Good |
| High Cmac | | | * 100 | Very Good |

* The 100% Elevator Area represents the "All Movable Tail".

Stability Margin (S.M.) is the distance between the actual C.G. and the Neutral Point which definition is that C.G. location for which there would be no stability. Consequently, a Large Stability Margin will cause the airplane to return quickly to a trim speed after some aerodynamic disturbance such as a gust, even stick free (see Figure 33a).

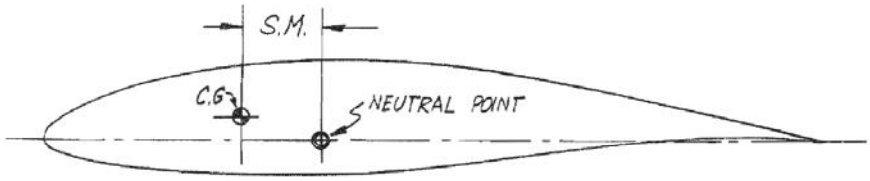


FIGURE 32 - STABILITY MARGIN

With small Stability Margin, the opposite is true and perhaps the airplane will not return to trim speed with the stick free (Figure 33b).

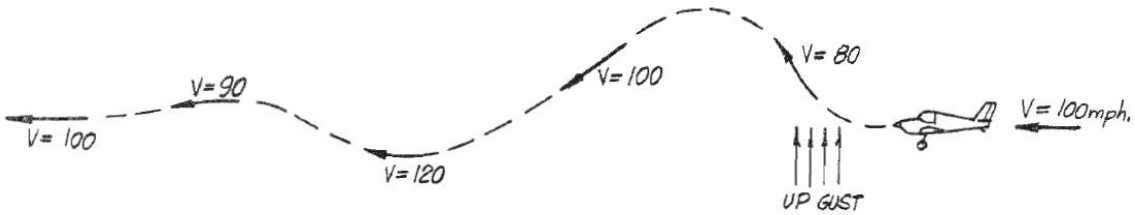


FIG. 33 a

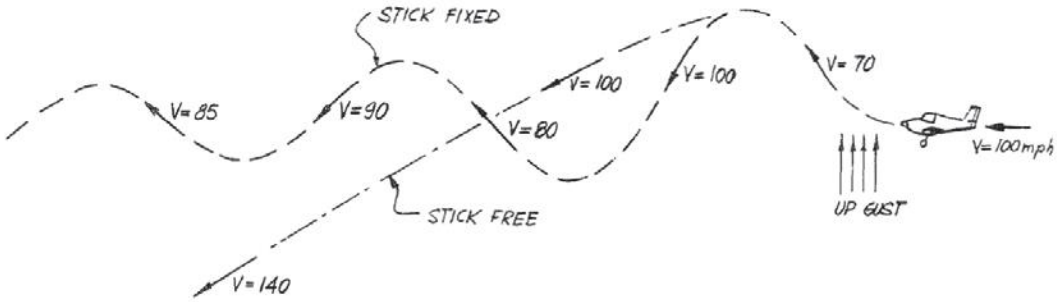


FIG. 33 b

For the Laminar PL-1 we assume VH = .430 and the tail length lH/c = 2.75.

Solving the tail volume equation for SH:

$$S_H = \bar{V}_H \times \frac{S_W}{l_{H/c}} = .430 \times \frac{116}{2.75} = 18.2 \text{ sq. ft.} \cong 18.0 \text{ sq. ft.}$$

From "Airplane Design" by K. D. Wood (Fourth Edition, Ref. 12) on Page 7:1 - Table 7:1, The AR for the horizontal tail varies between 3.5 to 4.5. The lower value seems to be adequate for this airplane; the high values will be resul in heavier construction.

$$b_H = \sqrt{S_H \times AR} = \sqrt{18.0 \times 3.5} = \sqrt{63} = 7.94 \text{ ft.}$$

And as a round number will be easier to remember, we fix the tail span in 8 ft. The tail chord will be:

$$c_H = \frac{S_H}{b_H} = \frac{18.0}{8} = 2.25 \text{ ft.} = 27''$$

The next question is: "How much elevator?". It all depends what we want to do with the airplene. TABLE 8 provides a generalidea of the control effectiveness related to elevator area. For an acrobatic airplane, a large elevator is desired. For aspin-proof airplane, a small elevator or restricted travel elevator will be used so the airplane could not even be stalled. These considerations are of general nature and a more accurate determination of the elevator area requires a careful and lengthy calculation described in detail in a future volume. But we can anticipate here that after investigating eight different tail combinations for the PL-1, it was found that an all-movable tail mounted on the top of the [illegible] provides the best control and stability with the mínimum area.
The concept of "Tail Volume" is mostly related to Stability, while the elevator (Je)and area are related to Trim and Control Obviusly, the larger movable surface will provide the greatest control or trim force. The maximum is reached when the whole tail moves, resulting in an "all-movable" tail. Tne elevator angle also has a limit. In general, no more than 25° should be used; any deflection beyond this value wi1l not add appreciable value to the tail force. It is a good pactice to dimension the elevator assuming demax =±20°.
One last vord on this subject: The elevator deflection has nothing to do with the airplane stability. Deflecting the elevator will change the trim speed but not the stability.

**TABLE 9**

**VERTICAL TAIL STTISTICS**

| Airplane | SW(ft2) | b(ft) | SV(ft2) | Sv/Sw(%) | lv(ft) | Vv |
|---|---|---|---|---|---|---|
| Piper J3 | 178.5 | 35.2 | 10.2 | 5.7 | 13.4 | .022 |
| Shin 2150-A | 144.0 | 30.0 | 9.5 | 6.1 | 11.0 | .024 |
| Bebe Jodel D-9 | 97.3 | 22.9 | 4.9 | 5.0 | 11.4 | .025 |
| Luscombe Silvaire | 140.0 | 35.0 | 10.6 | 7.6 | 11.9 | .026 |
| Cessna 140 | 159.6 | 33.3 | 11.5 | 7.2 | 12.8 | .028 |
| Cessna 150 | 160.0 | 33.3 | 11.7 | 7.3 | 13.1 | .029 |
| Piper Cherokee | 160.0 | 30.0 | 10.8 | 6.7 | 12.9 | .029 |
| Money Mark 20 | 167.0 | 35.0 | 12.9 | 7.7 | 13.2 | .029 |
| Bellanca 260 | 161.5 | 34.2 | 16.4 | 10.2 | 12.6 | .037 |
| Beechcraft D-50 | 277.0 | 45.3 | 27.0 | 9.7 | 18.0 | .039 |
| Ryan Navion | 184.0 | 33.4 | 14.6 | 7.9 | 16.9 | .040 |
| Taylorcraft Model 20 | 178.5 | 34.7 | 18.7 | 10.5 | 13.8 | .042 |
| Beechcraft T-34 | 177.6 | 32.8 | 16.9 | 9.5 | 14.5 | .042 |
| Midget Mustang | 69.3 | 18.6 | 6.7 | 9.6 | 8.2 | .042 |
| Cessna T-37 A | 184.0 | 33.8 | 18.7 | 10.2 | 14.5 | .043 |
| Cessna TL-19D | 174.0 | 36.0 | 18.4 | 10.6 | 15.4 | .045 |
| | | | | | | |

$S_W$ = Wing Area
b = Wing Span

$S_V$ = Vertical Tail Area
$l_V$ = Vertical Tail Arm

$\bar{V}_V$ = Vertical Tail Volume Coefficient

The sequence described for the horizontal tail also could be applied for the vertical tail. An average value from Table 9 is selected: Assume Vv = .033. The equation for Vertical Tail Volume can be solved for tail area Sv:

$$S_V = \bar{V}_V \times \frac{S_W \times b}{l_V} = .033 \times \frac{116 \times 28}{10.6} = 10.2 \text{ sq. ft.}$$

The Vertical Tail arm (lv) was selected on several cut-and.try layouts. The idea was to complete all the known values such as horizontal tail area ans position, ground clearance, aesthetics, structural arrangement, control mechanisms, etc., and also to obtain a clean vertical tail for spin recovery as ilustrated in Figure 34 and discussed in detail in a future volume. The horizontal tails blanks the vertical tail within the cross-hatched zone. To avoid this loss in effectiveness, the simplest resource is to move the vertical ahead of the horizontal. Also sweeping forward the vertical will help, like in the Mooney airplanes, but aesthetics and "jet-age" styling push in the opposite direction Again it is a matter of compromises. Another solution is the "T" tail, (horizontal on top of the vertical). For spin recovery this is ideal but from structural and control mechanism viewpoints, this is heavy an complicated.

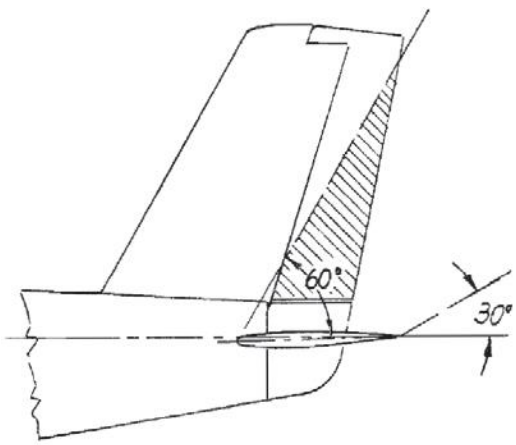


FIGURE 34

The amount of Rudder area was based in Directional Control calculations and resulted in 30% cf the total vertical tail area. But flight tests results indicated that this was not enough. A modification of the PL-1 incorporates a larger rudder area giving very satisfactory results.

During the early stage of design of the PL-1 airplane, the possibility of using a Vee-tail was considered. The Vee-Tail has some advantages and disadvantages compared with a conventional tail.

From NACA Report 823 (Ref. 13), "Experimental verification of a simplified Vee-tail theory an analysis of available data on complete models with Vee-tails", we reporduce some of the conclusions:

"The Vee-tail could have the following advantages over the conventional tail assembly:

(1) Less drag interference because the Vee-tail has fewer fuselage tail junctures.

(2) Less tendency toward rudder lock

(3) Higher locations of tail surfaces, which tends to reduce elevator deflection required for take-off and landing, to keep the tail out of spray in flying-boat take-

off and to reduce possibilities of tail buffeting from the wing and canopy wakes in high-speed flight.
(4) Fewer tail surfaces to manufacture."

On the other hand, the analysis indicate the following disadvantages that a Vee-tail might have when compared with conventional tails:
(1) Possible interaction of elevator and rudder control forces.
(2) Possible interaction of elevator and rudder trimming when tabs are at fairly large deflections.
(3) More complicated operating mechanism.
(4) Greater loads on tail and fuselage, which would tend to increase the weight."

The relative merits of the Vee-tail and conventional tails for spin recovery have not been established, but it appears that the Vee-tail should be at least as good as the conventional tail assembly in this respect, except possibly in cases in which simultaneous full deflection of both rudder and elevator is required for recovery from the spin".

On page 12 of the same report appears the following equation:

$$Sh + Sv = Svee$$

Where:

Sh = Surface of conventional horizontal tail

Svee = Surface of Vee-tail

Sv = Surface of conventional vertical tail

This means that the surface of a Vee-Tail is equal to the sum of the certical and horizontal surfaces of a conventional tail, and not smaller as apparently it seems to be.

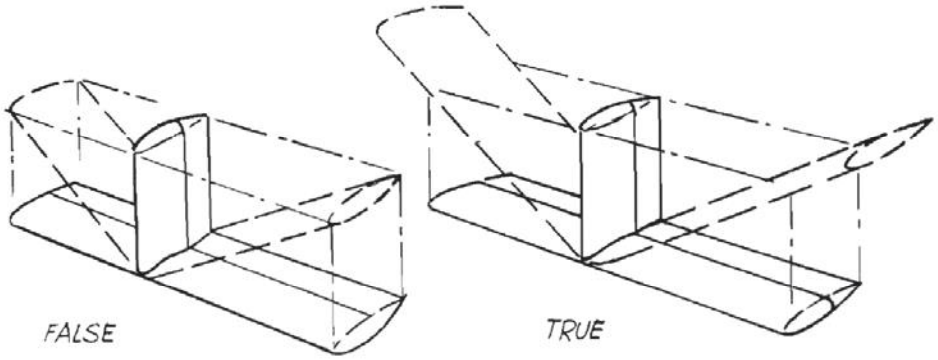


*FIG. 35 - COMPARATIVE SIZE OF CONVENTIONAL AND "V" TAILS*

If there is no reduction in the total surface, the stractural weight is roughly the s ame, but the controls are more complicated and a "mixer" mechanism is necessary in addition to the standard controls. All these considerations were enough to decide on a conventional tail.

Some modern high-perfomance gliders are using Vee-tails mostly because this arrangement provides the greatly need ground clearance.

## 1-18 POWER PLANT SELECTION.

For the American Amateur designer the choice is well defined: an air-cooled, four cylinder opposed engine. Figure 36 is a three-view of the Continental C90-12F, but the same drawing can be used for the C-75, C-85, and the O-200-A.

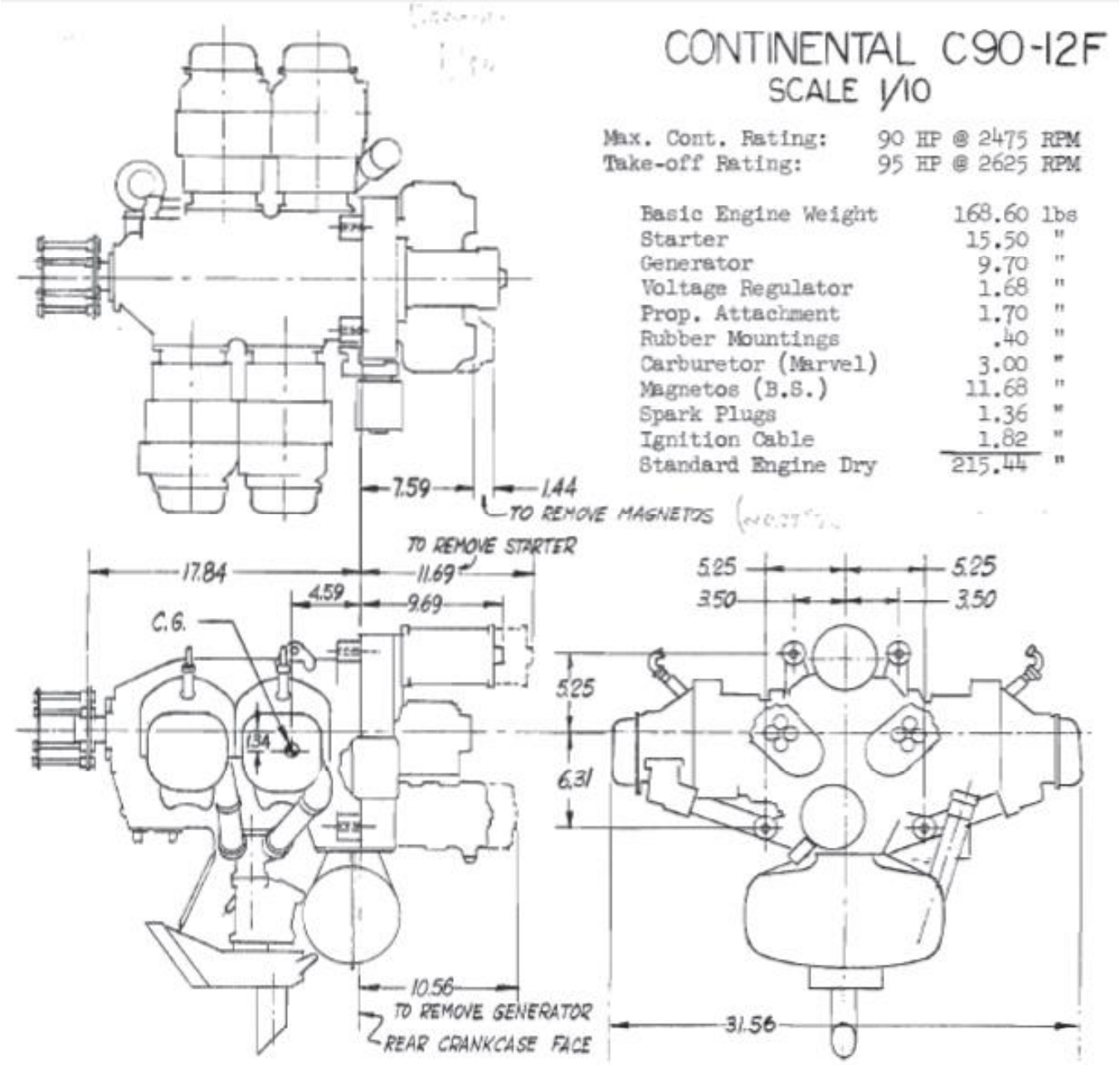


FIGURE 36

The O-290-GA engine made by Lycoming for use in Air Corps Model C-21 and C-22 generator units which supplied power for starting jet aircraft is basically the same as the O-290-D2B aircraft engine shown in Figure 37. The O-290-G could be purchased for $100 to $160 making it an extremely attactive power plant for the home builder.

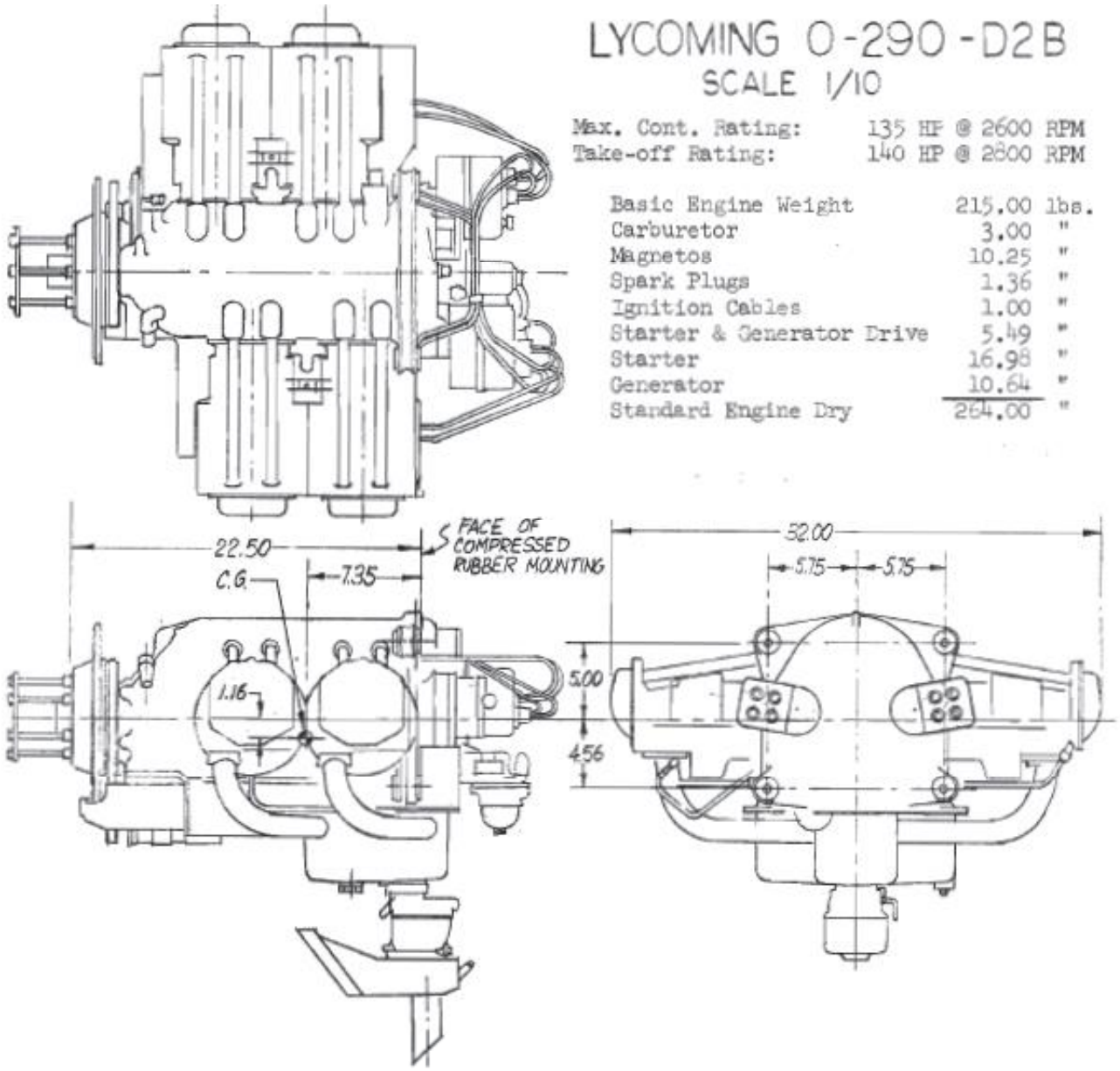


The PL-1 was designed for the Continental 0-200-A engine which has 100 hp maximum continuous rating. The prototype airplane N4081K was equipped with a C90-12F requiring only four spacers to make up the difference in the engine mounting. (See Photo). The C90-12F uses the rubber cones, while the 0-200-A has the Lord Mountings; otherwise both engines are physically the same. A redesign for the Lycoming 0-290-D2B or the converted 0-290-G is in the works. This power plant requires a different engine mounting and a modified cowling.

The wing tips tanks have 12.5 gallon capacity each. At the recomended cruising for the C90-l2F, which is 2350 RPM and 24.5 in Hg of manifold pressure, the approximate fuel is 5·9 gal/hr. The endurance is then:

$$\frac{25 \text{ gallons}}{5.9} = 4.25 \text{ hours}$$

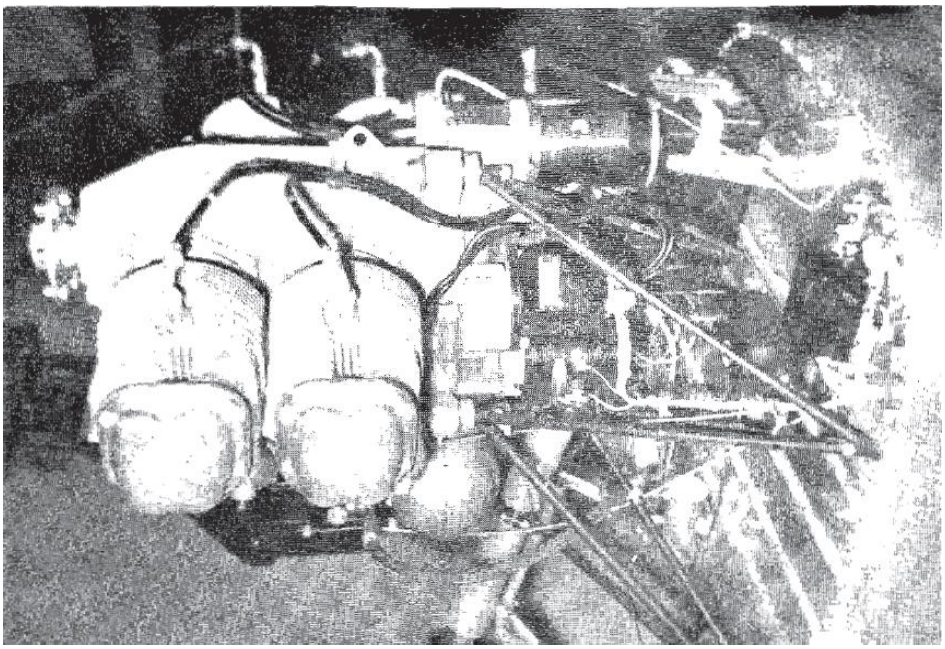

## 1-19 COCKPIT DESIGN

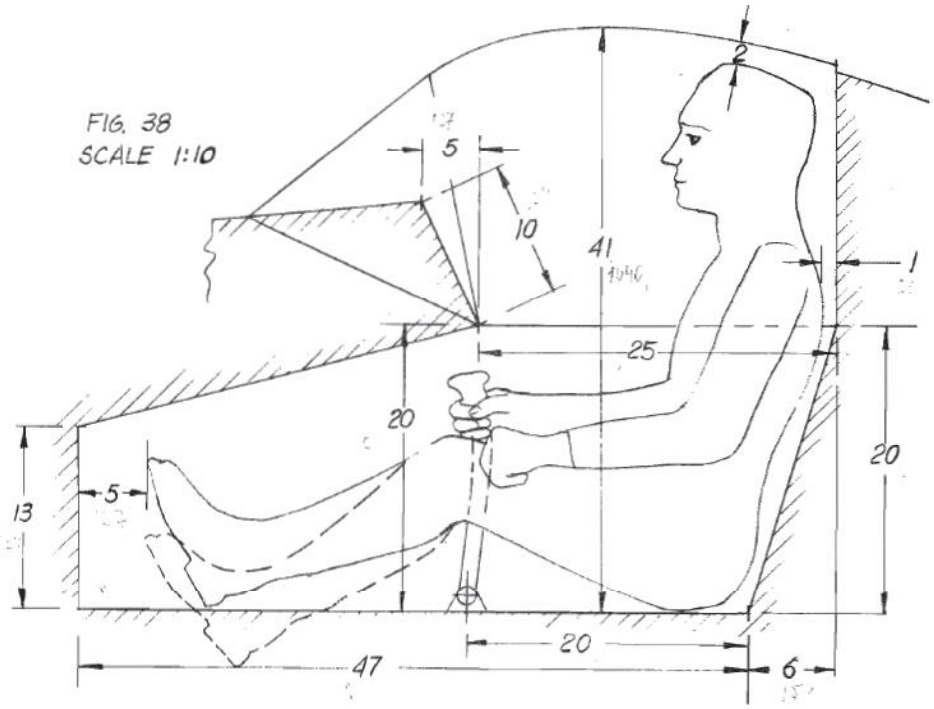

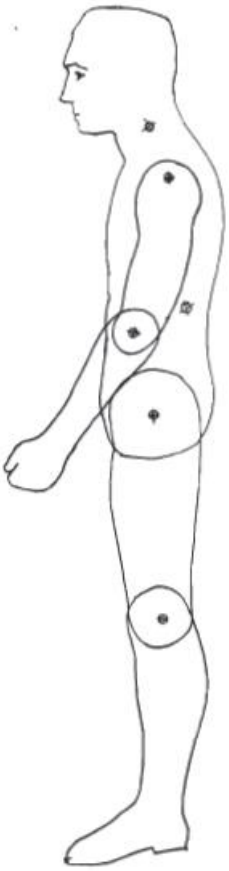

Figure 39
Standard Man

The first step in the cockpit design is to outline on aluminum or celluloid sheets the silhouette of a standard size person in a suitable scale. Fcr preliminary design work, the 1/10 scale is considered adequate. In Figure 38, the mínimum dimensions for a cockpit are shown. It is advisable to provide a difference of level between the seat bottom and the floor to avoid leg tiring, as shown by dotted line.

The components of a standard size man are shown in Figure 39. These components can be traced directly on aluminum or celluloid sheets, then contour sawed and assembled using small screws at the indicated articulation points.

The cockpit is the best place to to start the layout, and "design the airplene around the occupants." The cockpit mínimum width is 40" for "side by side" configuration and 22" for single place or tandem configuration.

In Figure 40, the recommended control movements and locations are shown. The stick at neutral position is the reference point. This point is located at 20" forward of the seat back (Fig.38).

The dual stick control is simple and ligth. Some details of the PL-1 cockpit are shown next photos. The first one shows the flap control lever at the "flap-up" position, the elevator trim-tab wheel, and position indicator, the dual control sticks, and the seat pan which is also torque box for the wing.

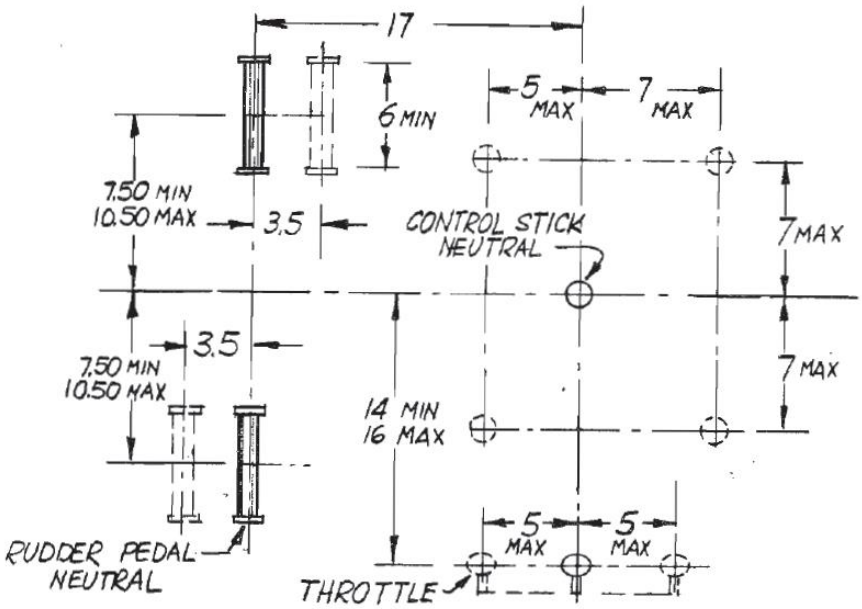


Figure 40
Control Movements - Plan View

When the wing is removed from the fuselage, the bolt at the forward end of the elevator push-pull tube and the universal coupling on the trim-tab torque tube, (visible at the open rear end of the box), are disconnected. These two are the only control connections which have to be disconnected.
The second photo shows the instrumental panel, the windshield and the forward end of the bubble canopy slides.

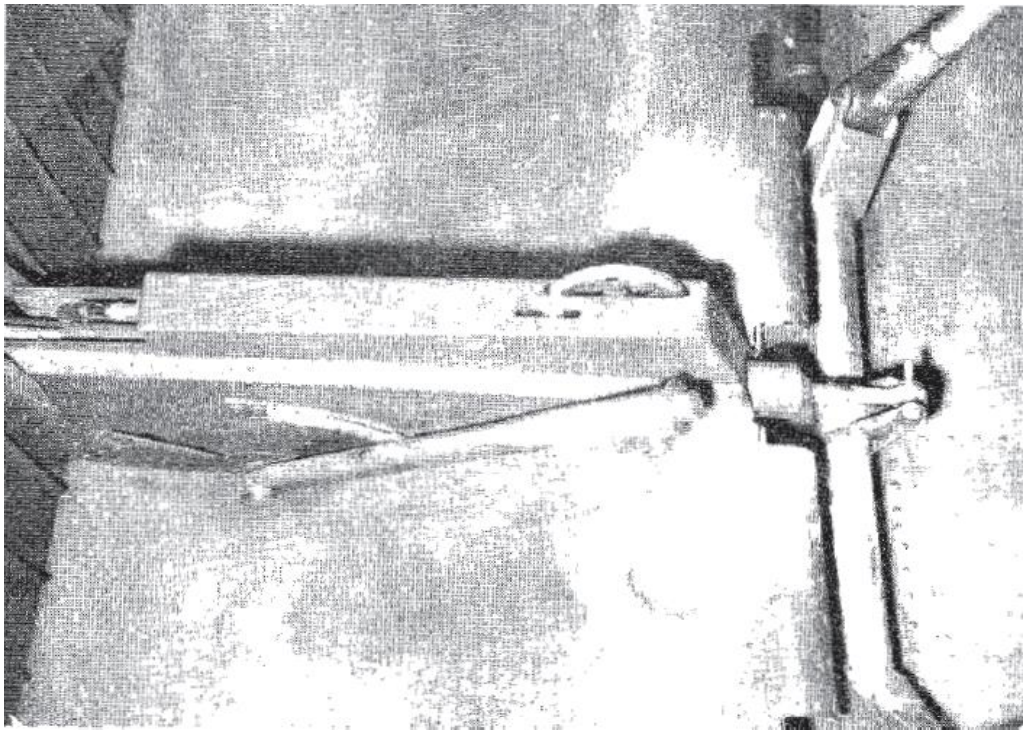

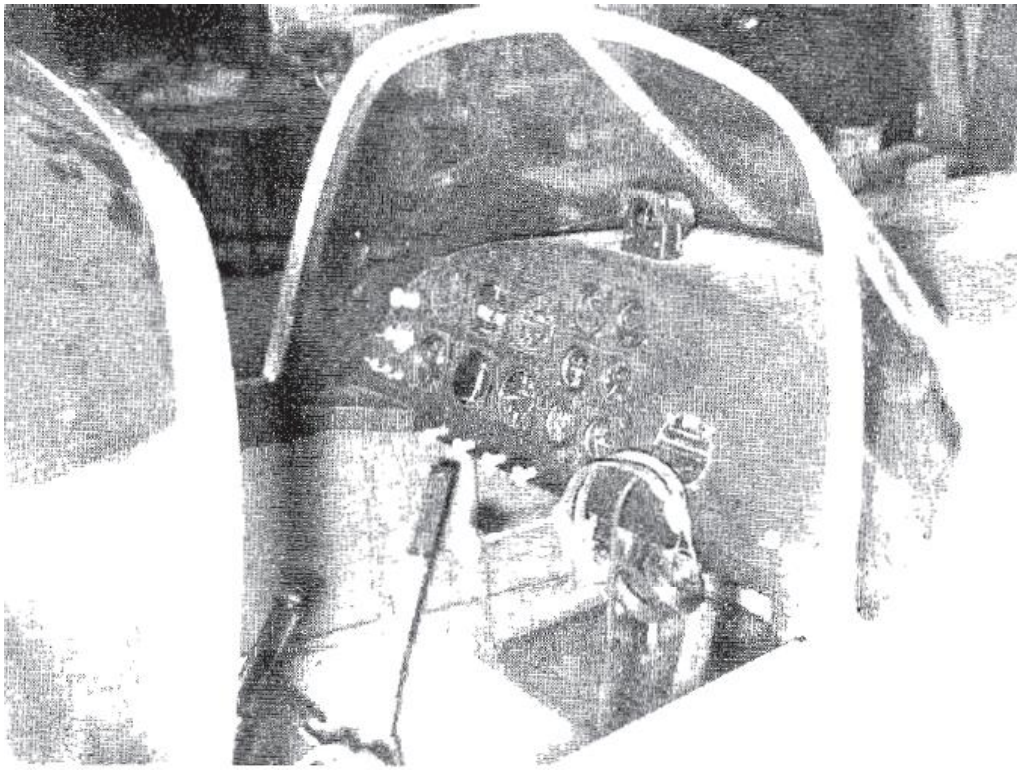

## 1-20 LANDING GEAR DESIGN

The choice of a tricicle landing gear is justified by the following reasons:

1- A leveled position is more comfortable when entering or leaving the cockpit.
2- There is an improved forward vision from the cabin during ground runs.
3- The tricicle landing gear eliminates the ground loop, it gives better ground stability and permits full braking which in turn reduce the landing distance.
4- The small wing incidence permits a faster ecceleration, thus a reduction in take-off distance.
5- With a leveled taxiing position the chance of damaging the tail with stones blown up by the propeller are reduced.

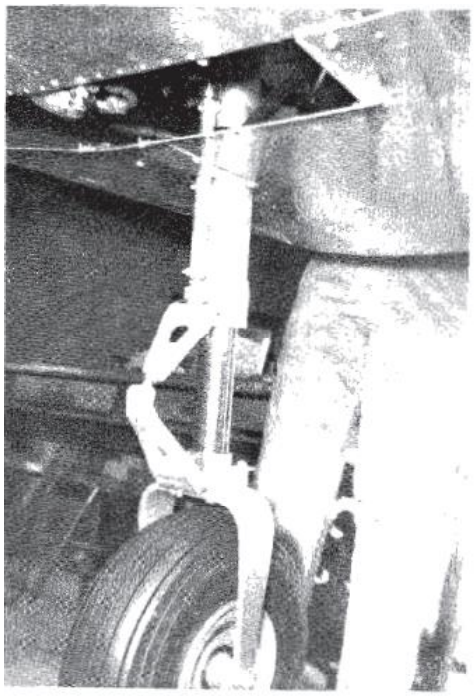

NOSE GEAR

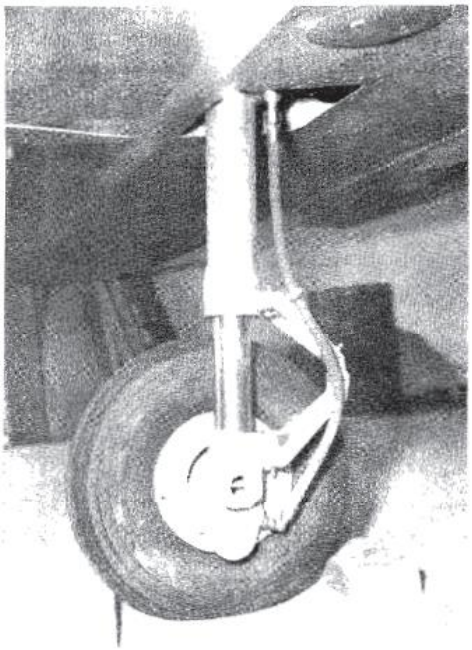

MAIN GEAR

The ground clearance requirements specific in CAR 3.422 (Ref. 1) are reproduced next:

"(1) Seven inches (for airplanes equipped with nose wheel type landing gears) or 9 inches (for airplanes equipped with tail wheel type landing gears) with the landing gear statically deflected and the airplane in the level, normal take-off, or taxiing attitude, whichever is most critical".
"(2) In addition to subparagraph (1) of this paragraph, there shall be positive clearance between the propeller and the ground when, with the airplane in the level take-off attitude, the critical tire is completely delated and the corresponding landing gear strut is completelly bottomed." (see Figure 41)

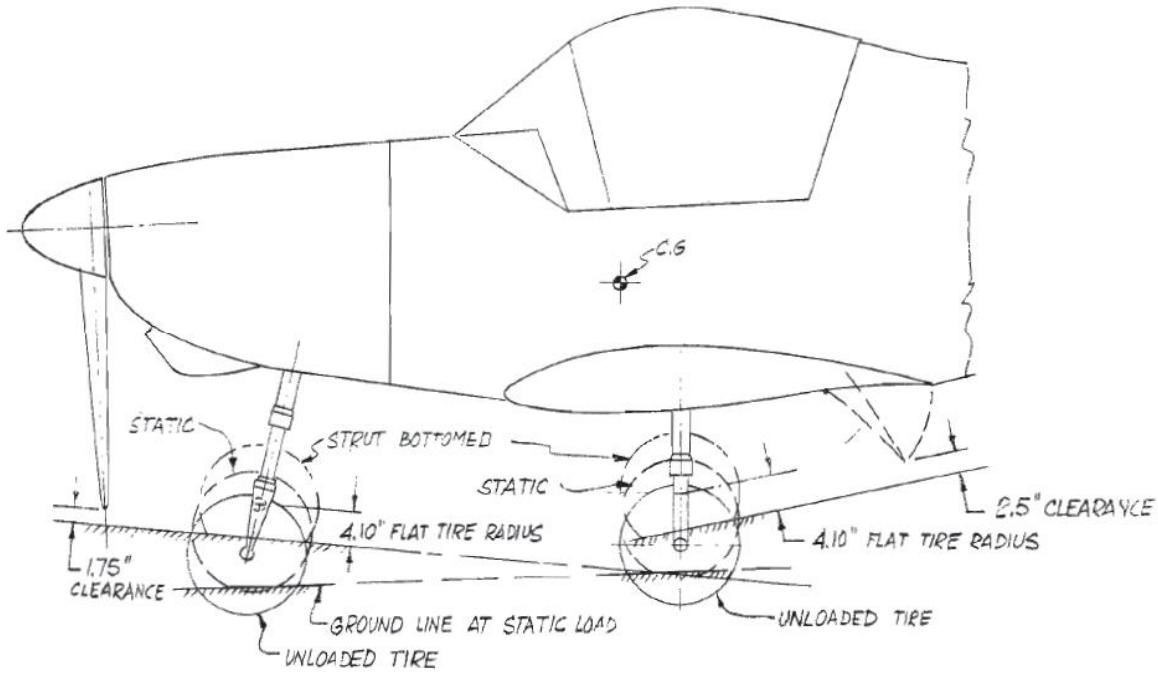


**FIGURE 41 - LANDING GEAR CLEARANCES - PL-1 LAMINAR**

Some General Considerations on Landing Gear Design

A- Tail Wneel Type (Figure 42)

The C.G. for the Design Gross Weight should fall inside the cross-hatched area enclosed between 15° and 25° from the vertical. The wheel motion due to shock absorber deflection should fall inside the cross-hatched area enclosed between the vertical and 5°.

The tail wheel knuckle spindle axis should be inclined forward 5o from the normal to the ground line in the taxiing position. The spindle axis should intercept the ground line ahead of the wheel contact point at a distance equal at least 1/10 of the wheel diameter. The tail wheel shock absorber deflection must be within the cross-hatched area between the normal to the ground and 45° from the normal, preferably at 30° from the normal.

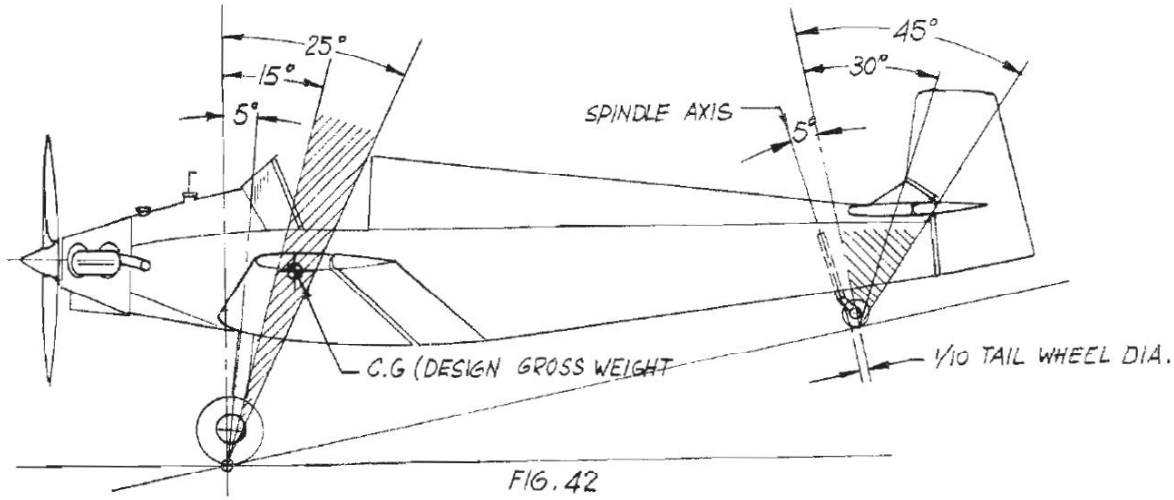


FIG. 42

The C.G. should be located as shown in the front view (Figure 43).

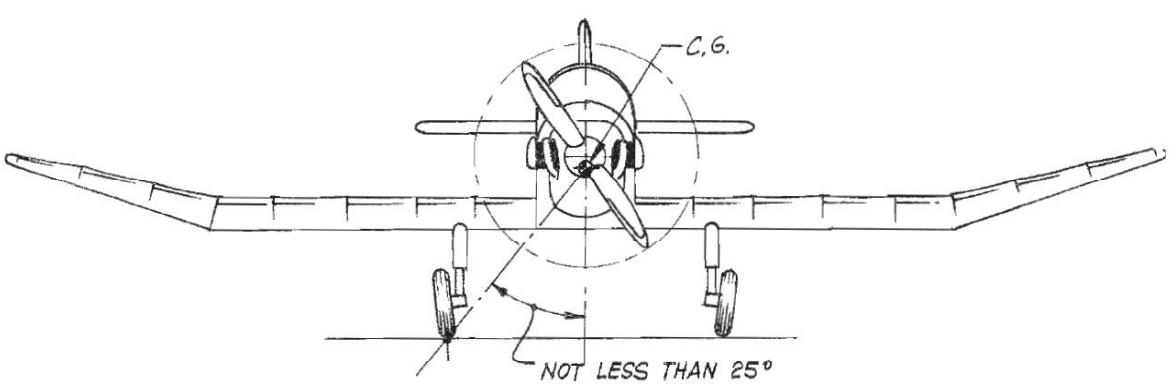


**FIGURE 43**

B- Nose Wheel (Figure 44)

The main wheels position with respect to the C.G. is deterrnined as follows:

1- Calculate the angle of attack (a) at Clmax with flaps-up (See page 40).
2- Locate the rnaximurn aft C.G.
3- Draw a 1/10 scale side view of the airplane with the wing at the angle of attack a at Clmax.
4- From the C.G. draw a vertical line, and from the tail skid a horizontal line.
5- At the intersection point "A" locate the center point of the tire contact area.
6- Draw the landing gear with the tire and shock absorber cornpletely deflected.
7- After the shock absorber deflection is calculated, the extended (unloaded) gear can be drawn.
8- See Figure 41 for clearance requirements.

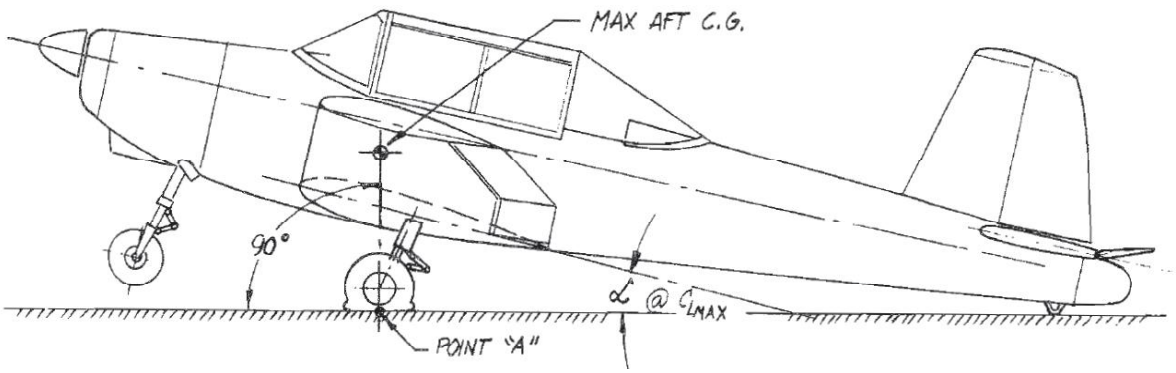


**FIGURE 44**

The track and wheel base should be determined next. The relationship between the track and wheel base is dictated by the Turnover Angle which is determined as follows:

1- Draw a top view showing the desired nose wheel and tail wheel positions. Also show the C.G. location.
2- Draw a side view showing the landing gear with shock absorbers and tires statically deflected and the C.G. position.
3- Establish line A-B. Extend the line to a point "C".
4- Through point "C" draw a perpendicular to line A-B.
5- Through the C.G.(in the plan view) draw a line parallel to A-B and obtain point "D".
6- From point "D" measure the height of the C.G. (h) obtained from the side view and obtain point "E".
7- Trace line E-C and measure angle "b". This is the turnover angle and should be less than 60°.

If the turnover angle is more than 60° increase the track or the wheel base and try again.

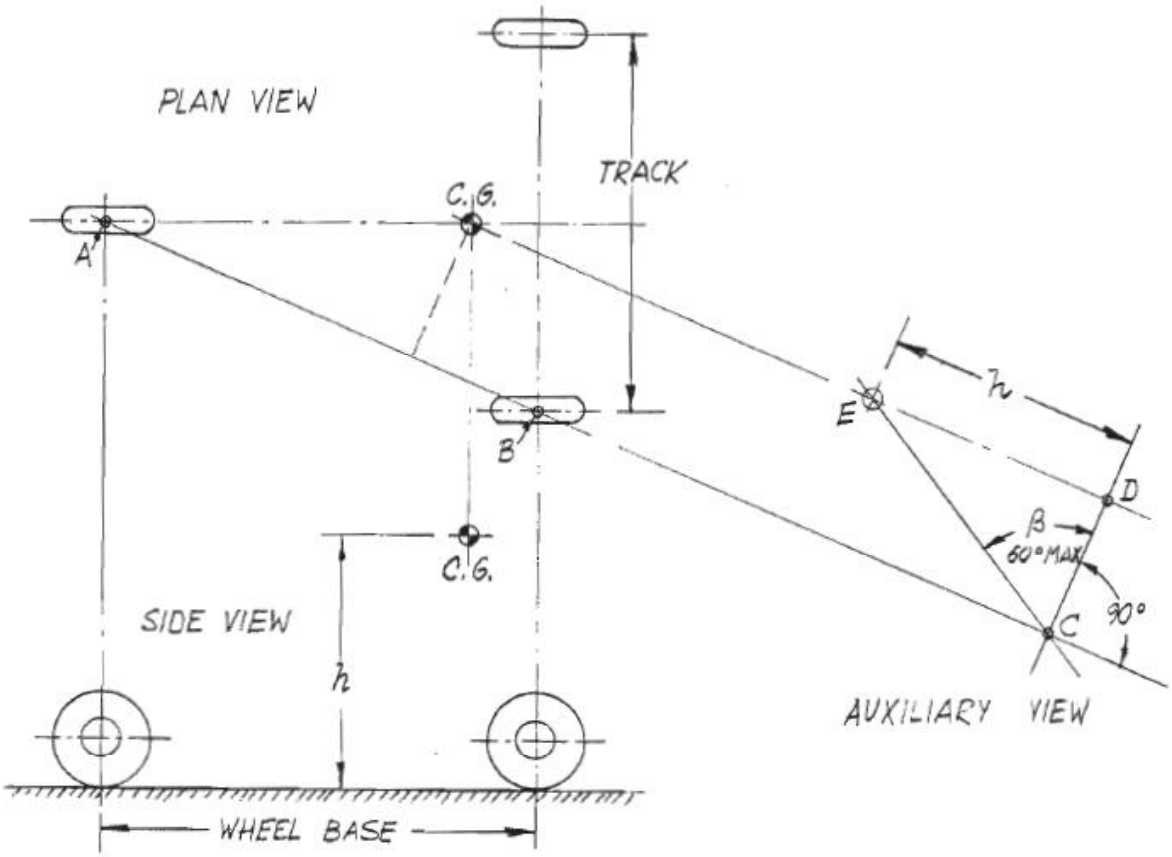


**FIGURE 45 - TURNOVER ANGLE**

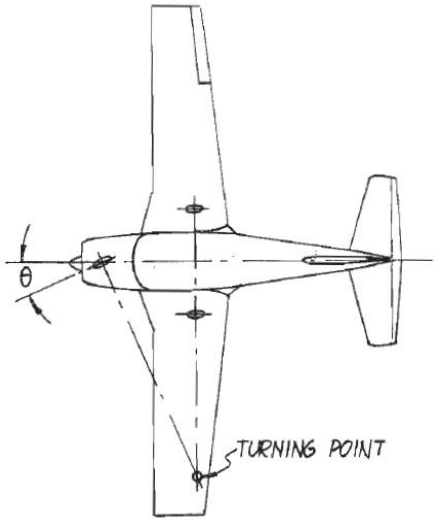


For a tailwheel type airplane, the checking of the turnover angle should be made using the same procedure. The angle b should not exceed 60°.
The steerable nose wheel should have an angular movement ¢ such as the turning point falls inside the wing tip as shown in Figure 46. Some airplanes have a large steer angle on the nose wheel which enables it to turn around on one wheel.
To check the position of the turning point, simply project the main wheel axis and the nose wheel axis at the maximum steer angle until they intersect, as shown in Figure 46.

**FIGURE 46 - TURNING POINT**

**Shock Absorber Travel**

The shock absorber travel could be estimated with an approximate method described next:
The energy stored in thegear is represented by the cross-hatched areas in Figure 47 and expressea by:

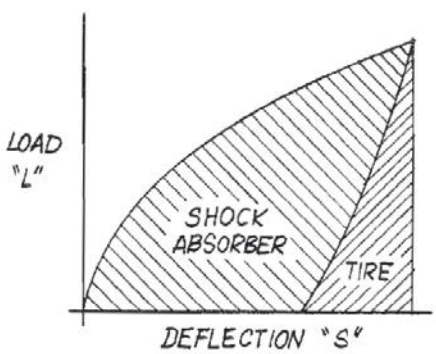


**FIGURE 47**

$$S.E. = \eta * L * S$$

where:

$\eta$ = Efficiency - L = Max. Vertical Load - S = Total Deflection (Tire + Shock Abs.)

The efficiency of various types of shock absorbers are given in Table 10.

The total vertical energy of the airplane is given by the following equation:

$$K.E. = \frac{Wv^2}{2g}$$

TABLE 10

| Type of Shock Absorber | $\eta$ |
|---|---|
| Tires | .47 |
| Steel Springs | .50 |
| Rubber Rings | .60 |
| Oleo-Pneumatic | .75 |

where :
W = Airplane Gross Weight - v = Maximum Descent Velocity
g = Gravity acceleration = 32.17 ft/sec.$^2$

The airplane vertical energy will be absorbed by shock absorber. Therefore:

$$K.E. = S.E. \quad \text{Then:} \quad \frac{Wv^2}{2g} = \eta .L.S.$$

Solving for $\eta * S$ :

$$\eta .S = \frac{v^2}{\frac{L}{W} .2.g}$$

The maximurn descent velocity "V" need not exceed 10 ft/sec. according to CAR 3.243. The relation L/W = n is the landing gear limit load factor. The minimum value of n is 2 (CAR 3.243); normally 3 is used for standard aircrafts.A very high value will be rather uncomfortable. Introducíng all these values in the previous equation:

$$\eta \cdot S = \frac{10^2}{3 \times 2 \times 32.17} = .527 \text{ ft.} = 6.32 \text{ in.}$$

The term η * S represents the whole shock absorber, which can be separated in tire + strut. Then:

$$\overbrace{\eta \cdot S}^{\text{Total}} = \overbrace{\eta_t \cdot S_t}^{\text{Tire}} + \overbrace{\eta_s \cdot S_s}^{\text{Strut}}$$

In Table 11, the most commonly used light airplane tires are listed. The tire maximum deflection can be calculated by subtracting the flat tire radius from the nominal radius.

TABLE 11

| Static Load | Tire Size | Ply Rating | Tire O. Diam. | Flat Tire Radius | Max. Tire Deflection |
|---|---|---|---|---|---|
| 700 | 5.00-4 | 4 | 13.25 | 3.6 | 3.02 |
| 800 | 5.00-5 | 4 | 14.20 | 4.1 | 3.00 |
| 1100 | 6.00-6 | 4 | 17.50 | 4.5 | 4.25 |

The static load is calculated as follows:

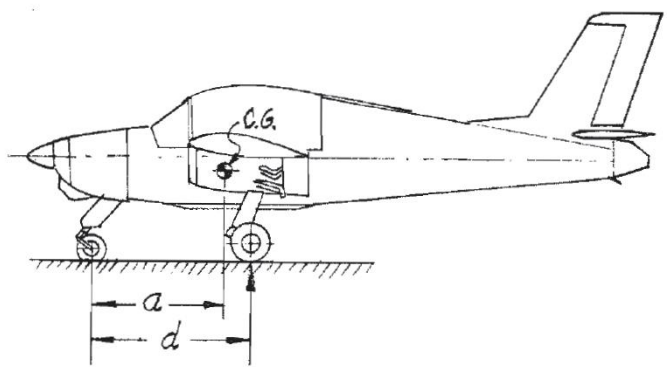


**FIGURE 48**

$$\text{Nose Wheel or Tail Wheel Load} = \text{G.W.} * \frac{(d - a)}{d}$$

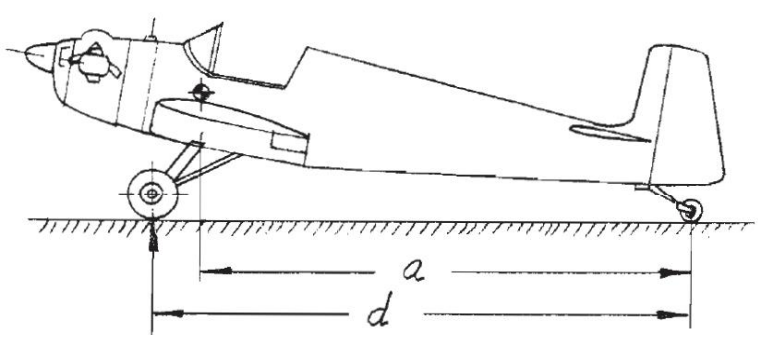


**FIGURE 49**

For the Laminar PL-L we selected 5.00-5 tires, and oleo-pneumatic shock absorbers. The shock absorber strut travel is calculated next.

$$S_s = \frac{\eta \cdot S - \eta_t \cdot S_t}{\eta_s} = \frac{6.32'' - (.47 \times 3.00'')}{.75}$$

$$= 6.5 \text{ in.}$$

## 1-21 WEIGHT ESTIMATION

Some statistics on existent airplanes will give us an idea of "what to shoot for". Table 12 presents data on single seat light airplanes, and Table 13, data on two seaters. In both tables, the airplanes are listed by increasing Gross Weight. The relation between Useful Load and Gross Weight varies very much depending on the airplane. It is difficult to establish a trend because many factors are involved such as Load factor, Engine Weight, Aspect Ratio, Type of Construction, etc. Therefore, instead of calculating an average value based on the whole table, it will be advisable to select two or three airplanes with similar characteristics to the proposed design and calculate the average value based on these few samples.

For the PL-1:

| | |
|---|---|
| Piel Emeraude 310A..... | .437 |
| M.S. 880-B Rallye..... | .412 |
| PZL-102..... | .360 |
| Thorp Sky-Scooter..... | .425 |
| | 1.634 |

$$\frac{1.634}{4} = .408$$

TABLE 12 - SINGLE PLACE AIRPLANES

| Designation | Gross Weight | Empty Weight | Useful Load | Useful L. / Gross W. | Max. HP | Wing Area | Lbs./ Sq. ft. |
|---|---|---|---|---|---|---|---|
| Driggs Dart DJ-1 | 511 | 330 | 181 | .335 | 25 | 74.8 | 6.82 |
| HM-200 Flying Flea | 530 | 309 | 221 | .417 | 30 | 101.0 | 5.25 |
| Tipsy S-2 | 550 | 286 | 264 | .480 | 25 | 100.0 | 5.50 |
| Lincoln Sport | 600 | 370 | 230 | .383 | 35 | 108.0 | 5.55 |
| Druine Turbulent | 606 | 341 | 265 | .437 | 30 | 80.7 | 7.52 |
| Luton Minor | 620 | 330 | 290 | .468 | 37 | 125.0 | 4.96 |
| Tipsy Nipper TG6 | 660 | 360 | 300 | .455 | 30 | 80.7 | 7.75 |
| Euklund | 695 | 420 | 275 | .396 | 65 | 50.0 | 13.90 |
| Jodel D-9 | 700 | 440 | 260 | .371 | 31 | 96.8 | 7.20 |
| Turbulent Stark | 727 | 463 | 264 | .364 | 45 | 91.5 | 9.95 |
| Fournier RF 01 | 727 | 462 | 265 | .364 | 35 | 118.5 | 6.20 |
| Mooney Mite 18 LA | 780 | 520 | 260 | .333 | 65 | 95.0 | 8.20 |
| Andreasson BA6 | 800 | 530 | 270 | .338 | 65 | 93.5 | 8.57 |
| Piel Pinochio CP-20 | 800 | 390 | 410 | .512 | 25 | 97.0 | 8.25 |
| Heuberger Doodle Bug | 830 | 620 | 210 | .253 | 85 | 68.0 | 12.20 |
| Loving-WR-1 Love | 839 | 631 | 208 | .248 | 85 | 66.0 | 12.70 |
| Honey Bee | 860 | 609 | 251 | .291 | 65 | 96.0 | 8.95 |
| Midget Mustang | 875 | 575 | 300 | .343 | 85 | 69.0 | 12.70 |
| Heinonen HK-1 | 880 | 550 | 330 | .375 | 65 | 75.0 | 11.70 |
| Corben Baby Ace | 950 | 575 | 375 | .395 | 65 | 112.3 | 8.45 |
| Smith Miniplane | 1000 | 616 | 384 | .384 | 100 | 100.0 | 10.00 |
| Salvay Stark Skyhopper | 1000 | 650 | 350 | .350 | 65 | 100.0 | 10.00 |
| Stolp Adams Starduster | 1080 | 700 | 380 | .352 | 125 | 110.0 | 9.80 |
| Scweizer 1-30 | 1100 | 700 | 400 | .363 | 65 | 160.0 | 6.88 |

TABLE 13 - TWO PLACE AIRPLANES

| Designation | Gross Weight | Empty Weight | Useful Load | Useful L. / Gross W. | Max HP | Wing Area | Lbs/ Sq. ft. |
|---|---|---|---|---|---|---|---|
| Druine Turbi D-5 | 1090 | 610 | 480 | .440 | 45 | 139.0 | 7.85 |
| Jodel D-111 | 1144 | 616 | 528 | .462 | 75 | 136.6 | 8.38 |
| Taylorcraft | 1200 | 750 | 450 | .375 | 65 | 185.0 | 6.50 |
| Wittman Tailwind | 1250 | 700 | 550 | .440 | 115 | 83.5 | 15.00 |
| Thorp Sky Scooter | 1250 | 720 | 530 | .425 | 90 | 104.0 | 12.00 |
| Böelkow Junior | 1270 | 750 | 520 | .410 | 100 | 94.0 | 13.50 |
| Nesmith Cougar | 1316 | 624 | 692 | .526 | 85 | 82.5 | 16.00 |
| Piel Emeraude 301 A | 1345 | 758 | 587 | .437 | 90 | 116.7 | 11.50 |
| Aeronca Super Chief | 1350 | 820 | 530 | .393 | 85 | 180.0 | 7.50 |
| Job 5 | 1350 | 944 | 376 | .278 | 90 | 129.0 | 10.50 |
| PZL-102 Kos | 1390 | 890 | 500 | .360 | 90 | 119.0 | 11.70 |
| Silvaire 8-F | 1400 | 870 | 530 | .378 | 90 | 140.0 | 10.00 |
| Aircoupe Forney | 1400 | 890 | 510 | .364 | 90 | 142.6 | 9.83 |
| Champion Traveler 7 EC | 1450 | 929 | 521 | .359 | 95 | 170.2 | 8.55 |
| Cessna 150 | 1500 | 946 | 554 | .370 | 100 | 160.0 | 9.40 |
| Cessna 140-A | 1500 | 907 | 593 | .396 | 85 | 154.0 | 9.75 |
| Victa Air Tourer | 1500 | 750 | 750 | .500 | 90 | 120.0 | 12.50 |
| Piper PA-18 "95" | 1500 | 800 | 700 | .467 | 90 | 178.5 | 8.40 |
| Kiebitz LF2 | 1505 | 990 | 515 | .343 | 90 | 158.9 | 9.50 |
| Stits Sky Coupe | 1525 | 1000 | 525 | .345 | 100 | 125.0 | 12.20 |
| Putzer Elster B | 1540 | 1012 | 528 | .343 | 90 | 188.0 | 8.20 |
| Piper Colt | 1650 | 940 | 710 | .430 | 108 | 147.0 | 11.20 |
| M.S. 880-B - Rallye | 1698 | 1000 | 698 | .412 | 100 | 132.0 | 12.88 |
| Temco Swift | 1710 | 1185 | 525 | .307 | 125 | 132.0 | 13.00 |
| Shinn 2150-A | 1817 | 1125 | 692 | .381 | 150 | 144.0 | 12.12 |
| Zlin Z 326 | 1984 | 1404 | 580 | .298 | 210 | 166.0 | 12.00 |

Determination of Useful Load

Pilot and Passenger ..... 170 lbs. each.
Gasoline ..... 6 lbs. per U.S. gallon
Lubricating Oil..... 7.5 lbs. per U.S. gallon

These values are fixed by CAR 3.1.
Pilot and Passenger ..... (2 x 170) = 340.0 lbs.
Fuel(25 gal)..... (25 x 6 ) = 150.0 lbs.
Oil (1 gal)..... (1 X 7.5) = 7.5 lbs.
Baggage or Parachutes..... 40.0 lbs.
537.5 lbs.

$$\text{Estimated Gross Weight} = \frac{537.5}{.408} = 1316$$

Estimated Empty Weight = 1316 - 538 = 778

Structural Weight Estimation

The structural weight is equal to the empty weight, less the engine weight. The engine weight for the C90-12F is listed on page 49 (215.44 lbs.)

Then:

Structural Weight = 778 - 216 = 562 lbs.

The weight of the structure major assemblies could be estimated with the following graphs and formulas derived by K. L. Sanders.

Wing

First calculate factor B as shown next:

$$B = \frac{GW(lb) \times n_{ult} \times S_W(ft^2) \times \left[(1.9\ AR) - 4\right]}{1 + (.11\ t/c_r(\%))}$$

Then:

$$B = \frac{1316 \times 9 \times 116 \times \left[(1.9 \times 6.76) - 4\right]}{1 + (.11 \times 15)}$$

$$= 4{,}570{,}000 \xrightarrow{\text{Figure 50}} W_W = 180 \text{ lbs.}$$

Where:

G.W. = Airplane Gross Weight = 1316 lbs.

$n_{ult}$ = Ultimate Load Factor = 6 x 1.5 = 9

$S_W$ = Wing Area = 116 sq. ft.

A.R. = Geometric Aspect Ratio = 6.76

$t/c_r$ = Root Airfoil Thickness = 15%

The actual wing weight of the PL-1 resulted in 175 lbs. This remarkable agreement can be seen also for some other wing weights checked with this graph.

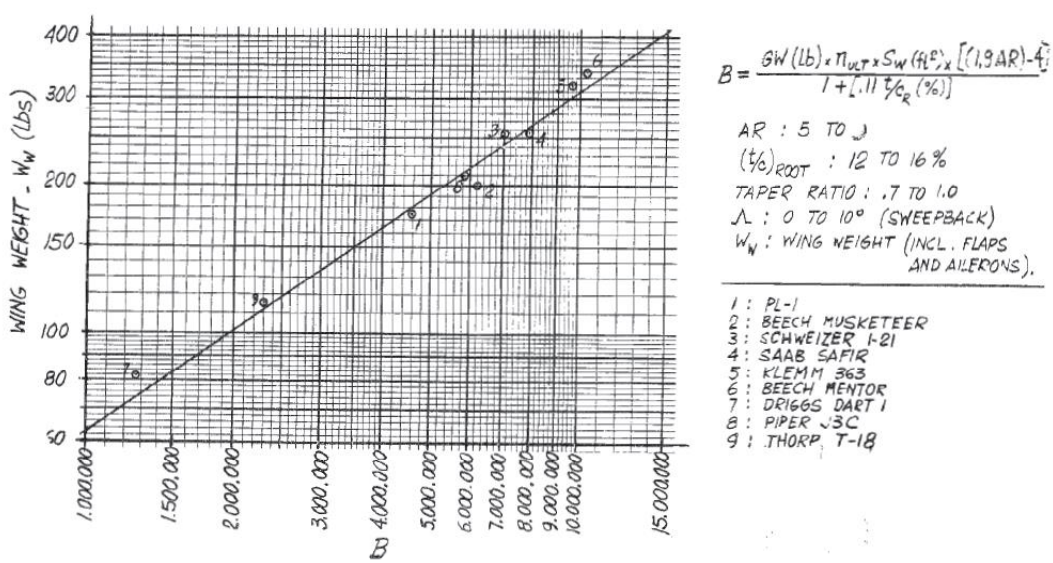


**FIGURE 50 - FACTOR "B" FOR WING WEIGHT ESTIMATION**

**Fuselage**

In Figure 51, two curves are shown based on statistical data. The lower curve represents "Optimized Designs," such as light sheet metal structure. The upper curve is representative of a more conservative type of construction, such as welded steel tube and fabric, also wood structures or flat sided heavy sheet metal.

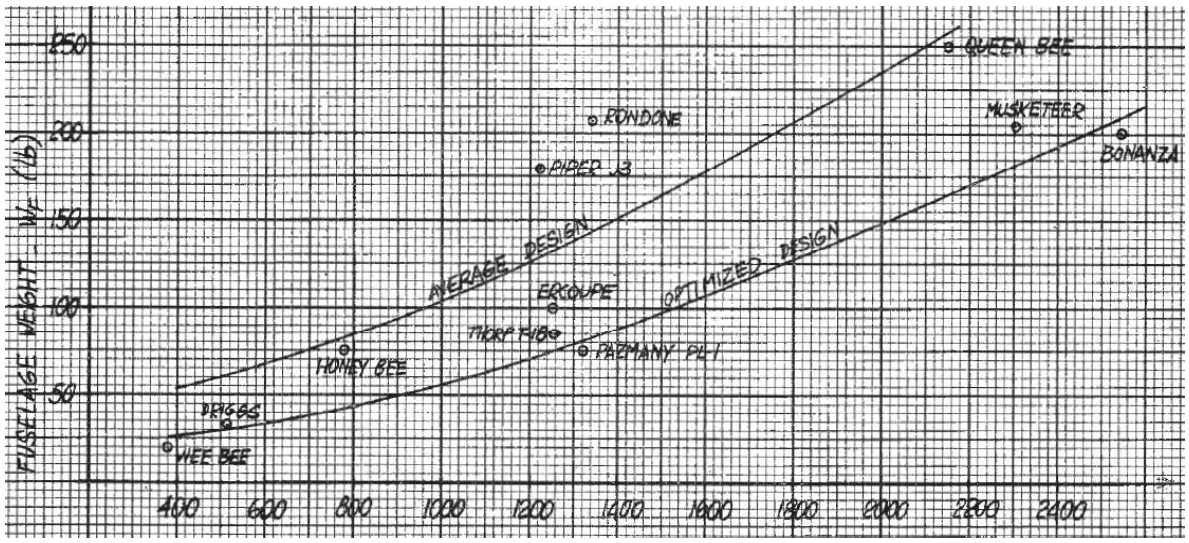


**FIGURE 51 - FUSELAGE WEIGHTS**

For the PL-1:

Gross Weight = 1316 lbs. ----> Figure 51 ----> WF = 80 lbs.

**Horizontal Tail**

The weight of horizontal is estimated from Figure 52 based on factor A. The calculation of factor A for the PL-1 is shown next:

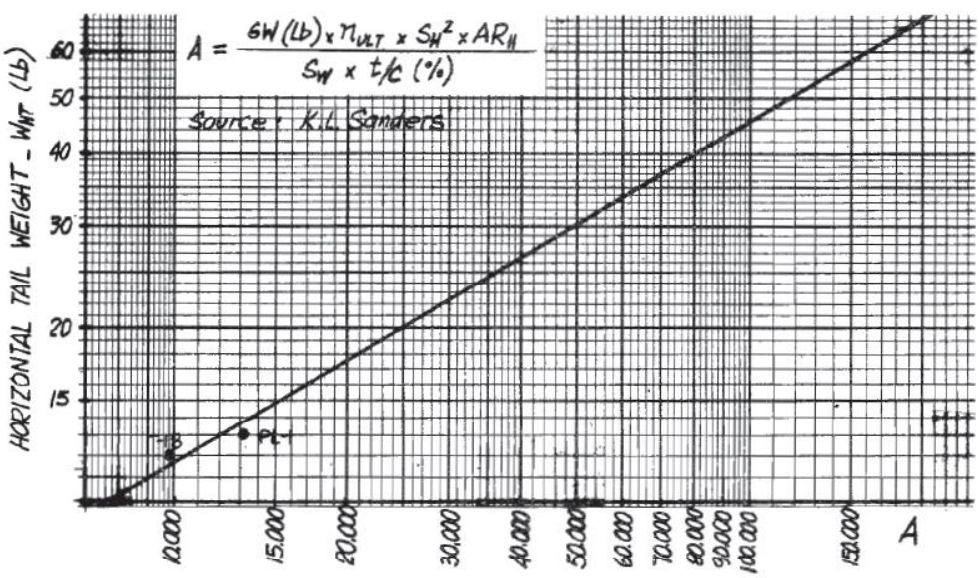


**FIGURE 52 - FACTOR "A" FOR HORIZONTAL WEIGHT ESTIMATION**

$$A = \frac{G.W.\ (lbs.) \times n_{ult} \times S_H^2 \times AR_H}{S_W \times t/c_r\ (\%)}$$

$$A = \frac{1316 \times 9 \times 18^2 \times 3.5}{116 \times 9} = 12.900$$

at A = 12.900 → Figure 52 → $W_{HT}$ = 17.5 lbs.

The actual weight of the PL-1 Horizontal Tail resulted in 18 lbs.

Where:

G.W. = 1316 lbs.

$n_{ult}$ = 9

$S_H$ = 18.0 sq. ft.

$AR_H$ = 3.5

$S_W$ = 116 sq. ft.

$t/c_r$ = Horizontal Tail Airfoil Thickness = 9%

**Vertical Tail**

The weight of the vertical tail is also estimated based on the horizontal tail weight previously found as follows:

Horizontal Tail Weight ..... = 17.5 lbs
Horizontal Tail Area ..... = 18.0 sq. ft
Unitary Weight ..... = $\frac{17.5}{18}$ = 1 lb/sq. ft.
Vertical Tail Area ..... = 10.2 sq. ft.
Vertical Tail Weight ..... = 10.2 sq.ft * 1 lb. sq. ft. = 10.2 lbs.

**Landing Gear**

The weight of Landing Gears could be estimated in 4.5% of the Gross Weight for tail wheel types and 5.5% for tricycle gears. For the PL-1:

$$1316 * \frac{5.5}{100} = 72 \text{ lbs}$$

Assume 70% of this weight for the main gear and 30% for the nose gear. Then:

Main Gear = $\frac{70}{100}$ * 72 = 50 lbs.
Nose Gear = $\frac{30}{100}$ * 72 = 22 lbs.

**Controls**

For light aircraft the surface controls weight could be estimated in 2.5% of the Gross Weight. For the PL-1:

$$1316 * \frac{2.5}{100} = 33 \text{ lbs.}$$

**Weight of Major Assemblies**

| | |
|---|---|
| Wing | 180.0 |
| Fuselage | 80.0 |
| Horizontal Tail | 17.5 |
| Vertical Tail | 10.2 |
| Landing Gear | 72.0 |
| Controls | 33.0 |
| | 392.7 |

The weight of major assemblies calculated before should be checked as soon as preliminary layauts became available. The volume of each part is calculated and then multiplied by the specific gravity of the material. The weight of raw material and hardware is listed in books such as S.A.W.E. Weight Handbook (Ref. 3). Also, "Airplane Design Manual" by F. K. Teichmann (Ref. 16) is a very good source of information, either for hardware or airplane components.

"Practical Light Plane Design and Construction" by W. J. Fike (Ref. 17) has some information on light airplane components weight.

Another very valuable source of information is the "Air Associates" catalog (Ref. 18) which provides dimensional and weight data on thousands of standard hardware items.

When there is no weight data on some components, the solution is to prepare simple drawings (1/10 scale is adequate) and determine the weight analytically.
Good results can be obtained by using some simplifying assumptions. For instance, in all sheet netal parts, rivet and bolt holes are not deducted and rivet weights are not added to the sheet metal weights. Instead, 5% is added to the calculated weight to take care of rivets and anti-corrosive paint. Next, sorne examples for the PL-1:

**Spinner**

Cone Surface: $\frac{\pi \times d \times h}{2} = \frac{3.14 \times 10 \times 10}{2} = 157$ sq. in.

Backing Plate: $\frac{\pi \times d^2}{4} = \frac{3.14 \times 10^2}{4} = 79$ sq. in.

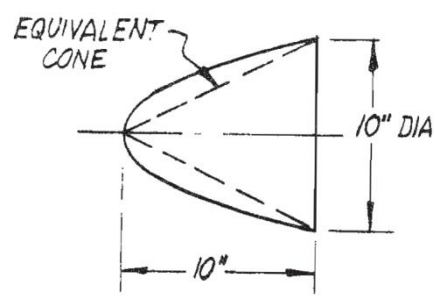


**FIGURE 53**

Total Surface = 157 + 79 = 236 sq. in.
Dural Sheet .064" thick, Vol 236 * .064 = 15.1 in.3
Dural Spec. Weight = .100 lbs./in.3
Weight = 15.1 in.3 x .100 lbs/in.3 = 1.51 lbs.

On the backing plate, there are some lightening holes which are not deducted because they are compensated by the weight of the fasteners, lips, reinforcements, etc.

**Engine Cowling**

The weight will be calculated based in projected areas. The nose piece is made of fiberglass .050" thick. (Weight of fiberglass laminate = .07 lb/in3).

| | | |
|---|---|---|
| Frontal Projection | = 17.0 * 33.0 | = 560 in.2 |
| Top and Bottom | = 33.0 * 6.0 * 2 | = 396 in.2 |
| Sides | = 22.0 * 6.0 * 2 | = 264 in.2 |
| Total | | = 1220 in.2 |

Prop. Hole $= \frac{3.14 \times 13.0^2}{4} = 133 \text{ in.}^2$

2 Cooling Air Holes = 7.5 * 5.5 * 2 = $\frac{82 \text{ in}^2}{215 \text{ in}^2}$

$\frac{215 \text{ in}^2}{1005 \text{ in}^2}$

Volume = 1005 * .050 = 50 $\text{in}^3$

Weigth = 50 * .07 = 3.5 lb

The carburetor scoop is made of fiberglass .030" thick.

Frontal projection = (5.0 * 6.6)-(3.0 * 4.6) = 19 $\text{in}^2$

Bottom = 17.0 * 6.6 = 112 $\text{in}^2$

Sides = $\frac{17.0 * 3.0}{2} * 2$ = $\frac{51 \text{ in}^2}{182 \text{ in}^2}$

Volume = 182 * .030 = 5.5 $\text{in}^3$

Weight = 5.5 * .07 = .4 lb

The cowling is made of .025" aluminum sheet metal. (Weight of aluminum = .100 lb/in.3.

Side projection = $\left(\frac{22.0 + 28.0}{2}\right) \times 28.0 \times 2 = 1400 \text{ in.}^2$

Top and Bottom = 33.0 * 28.0 * 2 = $\frac{1848 \text{ in}^2}{3248 \text{ in}^2}$

Volume = 3248 * .025 = 81.2 in3

Weight = 81.2 * .10 = 8.12 lb

Resume:

| | |
|---|---|
| Front Piece ..... | 3.50 lb. |
| Carburetor Scoop ..... | 40 lb. |
| Cowling ..... | 8 lb. |
| | 12.02 lb. |

The equivalent projected areas used in this estimation are larger than the real developed areas, but the increase can be considered representative of unaccounted reinforcements, baffles and fasteners.

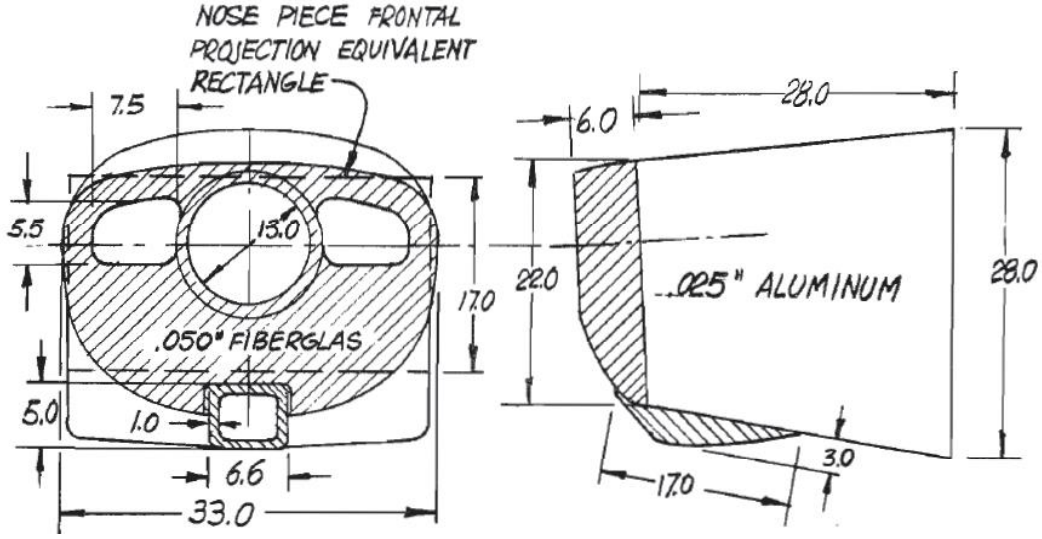


**FIGURE 54 - ENGINE COWLING**

## Engine Mounting

Figure 55 shows the geometry of the engine mounting tubes, which are assumed to be 3/4" dia. * .035". The lengths of the tubes are calculated analytically, based in the three ortogonal projections:

Length Calculations

<u>Tube a</u>: $l_a = \sqrt{\overline{14.5}^2 + \overline{6.0}^2 + \overline{11.5}^2} =$

$= \sqrt{210 + 36 + 132} = \sqrt{378} = 19.4"$

<u>Tube b</u>: $l_b = \sqrt{\overline{14.5}^2 + \overline{5.4}^2 + \overline{9.7}^2} =$

$= \sqrt{210 + 29 + 94} = \sqrt{333} = 17.7"$

<u>Tube c</u>: $l_c = \sqrt{\overline{14.5}^2 + \overline{10.6}^2 + \overline{9.7}^2} =$

$= \sqrt{210 + 123 + 94} = \sqrt{427} = 20.7"$

<u>Tube d</u>: $l_d = \sqrt{\overline{14.5}^2 + \overline{10.6}^2 + \overline{5.3}^2} =$

$= \sqrt{210 + 123 + 23} = \sqrt{361} = 19.0"$

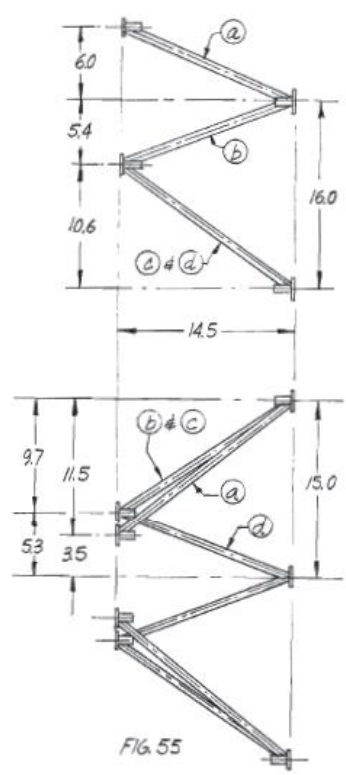


FIG. 55

Resume:

2 Tubes "a" = 19.4" * 2 = 38.8"

2 Tubes "b" = 17.7" * 2 = 35.4"

2 Tubes "c" = 20.7" * 2 = 41.4

2 Tubes "d" = 19.0" * 2 = 38.0"

153.6"

Tube 3/4" * .035", section = .0786 sq. in.
Volume = .0786 * 153.6 = 12.1 in.3
Steel Specific Weight = .283 lbs/in.3
Weight of Tubes = .283 * 12.1 3.43 lbs.
Weight of Bushings, Bolts, etc. = 1.00 lb. (estimated)
Engine Mounting Total Weight = 3.43 + 1.00 = 4.43 lbs.

## Fuel Tanks

The weight of aluminum fuel tanks including filler neck and cap could be estimated in .75 lbs per gallon. Terne plate tanks weighs approximately 1.00 lb. per gallon.

The PL-1 has wing tip fiberglass tanks. Their weight will be calculated next:

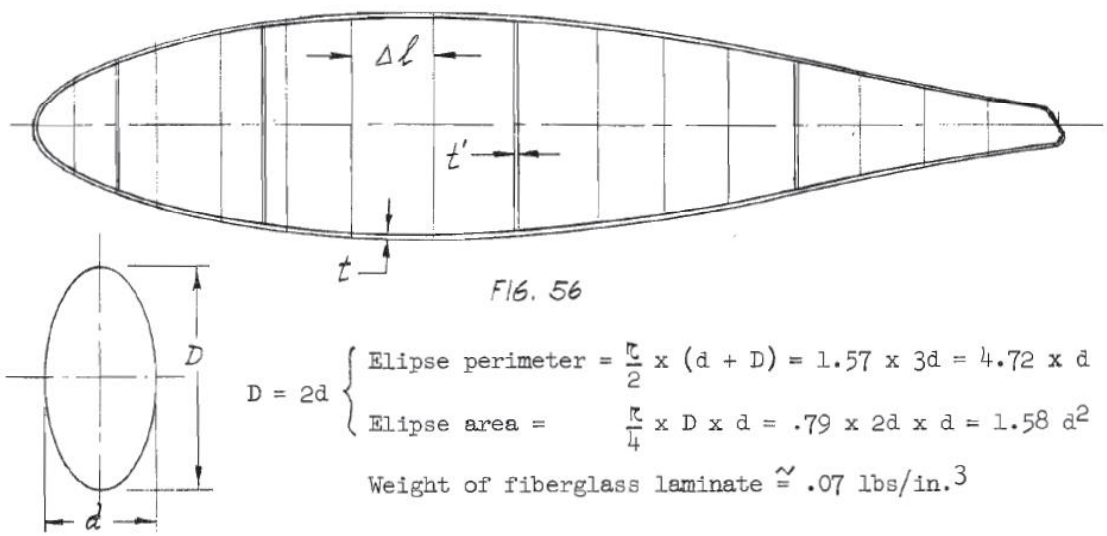


Divide the tank in sectors as shown, and calculate the volume of each shell sector (ΔVshell).

ΔVshell = Perimeter * Δl * thickness = 4.72 * d * Δl * t

The total shell volume will be the summation of all sectors:

$$V_{shell} = \Delta v1 + \Delta v2 + - - - - + \Delta v10 = 77 \text{ in}^3$$

The volume of baffles is:

$$V_{baffle} = \text{Elipse area} * t' = 1.58\ d * t'$$

and for the 4 baffles results: 17 $in^3$

The weight of the fiberglass will be:

$$(77 \text{ in.}^3 + 17 \text{ in.}^3) * .07 \text{ lbs/in.}^3 = 6.58 \text{ lbs.}$$

The weight of reinforcements, filler necks, fuel strainer, latches, pipes and fittings is estimated in 2.O lbs. Therefore, the weight of each tank will be:

Weight of complete tank = 6.58 + 2.00 = 8.58 lbs.
Weight of two tanks = 8.58 * 2.00 = 17.16 lbs

## Fuel Lines

3/8" * .035 tubes Aluminum - Length = 380"

| | | |
|---|---|---|
| Tube cross section | = | .0374 in3 |
| Tube Volume | = | .0374 * 380 = 14.2 in3 |
| Tube Weight | = | 14.2 * 100 = 1.42 lbs |
| Tube Fittings | = | .50 lbs |

Total weight of fuel lines = 1.42 + .50 = 1.92 = 2.0 lbs

## Equipment

These weights are determined either by weighing or from catalogs.

| Component | Weight | Unit |
|---|---|---|
| Propeller - Metal - 66" dia | 19.50 | lbs |
| Engine Baffles | 1.00 | lbs |
| Exhaust Pipes Cabin and Carburetor Heater | 9.00 | lbs |
| Battery and Case - 23 + 1.25 | 24.25 | lbs |
| Auxiliary Fuel Pump | 1.00 | lbs |
| Instruments | | |
| Airspeed Indicator | 1.00 | lbs |
| Altimeter | 1.00 | lbs |
| Magnetic Compass | 1.00 | lbs |
| Oil Pressure Gauge and Tubes | 1.00 | lbs |
| Oil Temperature Gauge | .50 | lbs |
| Tachometer and Cable | 1.00 | lbs |
| Turn and Bank Indicator | 1.50 | lbs |
| Climb Indicator | 1.00 | lbs |
| Manifold Pressure Indicator | .80 | lbs |
| Clock | .70 | lbs |
| Ammeter | .40 | lbs |
| | 9.90 | lbs |
| Seat Belts and Shoulder Harness | 2.00 | lbs |
| Cushions | 2.00 | lbs |
| Cockpit lights (2) | .30 | lbs |
| Landing Light | 1.00 | lbs |
| Position Lights (wing tip: 3 oz each - tail: 5 oz) | .70 | lbs |
| Rotary Beacon | 1.00 | lbs |
| 2 Brake Cylinder (Scott 4408) | 1.00 | lbs |
| Radio and Power Supply (VHF) | 6.00 | lbs |
| Sound Proofing | 2.00 | lbs |
| | **80.65** | **lbs** |

## Windshield and Canopy

The weight was calculated based on drawings and resulted:

Windshield ..... 6.0 lbs
Canopy ..... 14.0 lbs
20.0 lbs

### Engine Controls

The weight is estimated in 3 lbs.

**Resume of Structural Weight**

| | | |
|---|---|---|
| Major Assemblies | 392.7 | lbs |
| Spinner | 1.5 | lbs |
| Engine Cowling | 12.0 | lbs |
| Engine Mounting | 4.5 | lbs |
| Fuel Tanks | 17.2 | lbs |
| Fuel Lines | 2.0 | lbs |
| Equipment | 80.7 | lbs |
| Windshield and Canopy | 20.0 | lbs |
| Engine Controls | 3.0 | lbs |
| | **533.6** | **lbs** |

The result is very close to the Estimated Structural Weight (567 lbs) on page 62. The difference, 562 - 533 = 29 lbs., probably will vanish during the construction of the prototype. After the first airplane is built, it is always possible to refine the design. Simplifications could be made; sometimes one part could be redesigned to make the work of two. All this will eventually reduce the Structural Weight, but for the preliminary design, perfomance and loads calculation, the high value should be used.

## 1-22 AIRPLANE BALANCE

Now we are in condition to proceed with one of the most important steps in the aircraft design. This is the location of the C.G. The aircraft designer should permanently keep track of the weight and balance of the airplane. This is so important that every aircraft factory has a "Weight Group" in its Engineering Department. "Weight Engineers" continuously check the weight of each component during the design. Each drawing should be signed by them before release. Sometimes the weight of parts or assemblies result higher than estimated, then a decision should be made to either redesign the part and try to make it lighter even if it results more complicated, or to leave the design as it and take the weight panalty. Perts located from the C.G. are more critical than parts close to C.G.

The C.G. position is calculated simply by calculating the moments of each component with respect to reference lines. The following procedure is recommended:

(See Table 14)

1- Draw a side view of the airplane at a convenient scale (1/10 is adequate). Indicate the C.G. of each component by a small circle. It requires some practice to estímate by "eye ball" the position of the C.G. of some components. As a general guide, the C.G. of wings lies at 40% of the Mean Aerodynamic chord. The C.G. of Vertical and Horizontal Tails can be located at 50% of the respective mean chord. The C.G. of could be estimated at 40% of the fuselage lenght measured between the firewall and the tail cone.

2- Enter the weight of each component in column (3) of Table 14.

3- Draw a vertical reference line at the spinner vertice and a horizontal refe rence line at ground level. (See Figure 57)

4- Measure the horizontal and vertical distance of each component C.G. from the reference lines. Enter these values in columns (4) and (6)of Table 14.

5- Multiply the weight of each component by its horizontal distance (column (3)x column (4) and enter the result in column (5).

6- Multiply the weight of each component by its vertical distance (colum (3)x colmnn (6)) and enter the result in column(7).

7- Add column (3) to obtain the sum of weights. Add column (5) to obtain the sum of horizontal moments. Add Column (7) to obtain the sum of vertical moments.

8- Divide the sum of horizontal moments by the sum of weight to obtain the horizontal location of the C.G.

9- Divide the sum of vertical moments by the sum of weights to obtain the vertical location of the C.G.

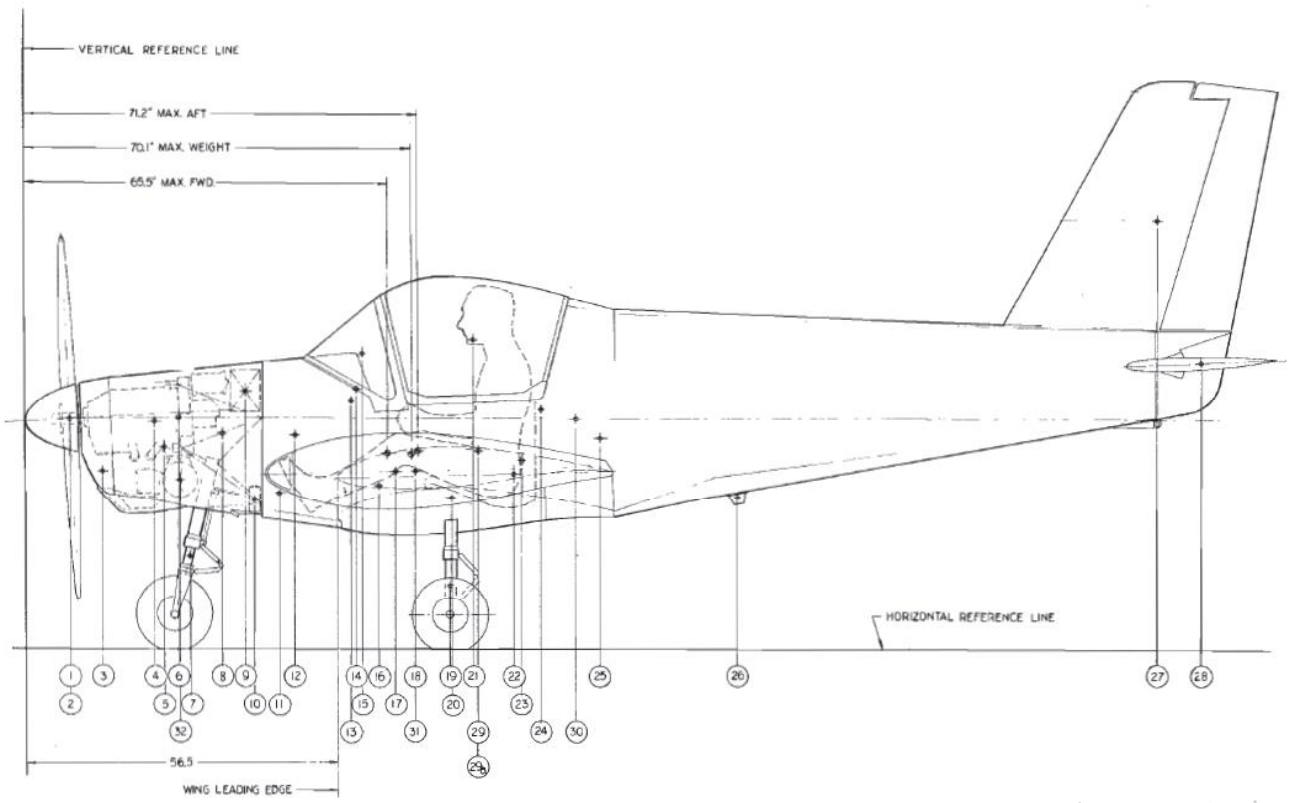


**FIGURE 57**

## TABLE 14 - BASIC BALANCE

| ① Item | ② Designation | ③ Weight | ④ Horz. Arm. | ⑤ Horz. Mom. | ⑥ Vert. Arm. | ⑦ Vert. Mom. |
|---|---|---|---|---|---|---|
| 1 | Spinner | 1.51 | 8.0 | 12 | 42.0 | 63 |
| 2 | Propeller | 19.50 | 8.0 | 156 | 42.0 | 820 |
| 3 | Landing Light | 1.00 | 14.0 | 14 | 32.0 | 32 |
| 4 | Engine and Baffles | 216.44 | 23.5 | 5,080 | 41.5 | 8,980 |
| 5 | Exhaust Pipes and Heater | 9.00 | 25.0 | 225 | 37.0 | 333 |
| 6 | Engine Cowling | 12.02 | 28.0 | 336 | 42.0 | 504 |
| 7 | Nose Gear | 22.00 | 30.0 | 660 | 17.0 | 374 |
| 8 | Engine Mounting | 4.43 | 36.0 | 159 | 39.0 | 173 |
| 9 | Battery and Case | 24.25 | 40.0 | 970 | 47.0 | 1,140 |
| 10 | Auxiliary Fuel Pump | 1.00 | 41.5 | 41 | 27.0 | 27 |
| 11 | Brake Cylinders | 1.00 | 46.0 | 46 | 28.0 | 28 |
| 12 | Engine Controls | 3.00 | 49.0 | 147 | 39.0 | 117 |
| 13 | Radio and Power Supply | 6.00 | 59.0 | 354 | 45.0 | 270 |
| 14 | Instruments | 9.90 | 60.0 | 594 | 47.0 | 465 |
| 15 | Windshield | 6.00 | 61.0 | 366 | 53.5 | 321 |
| 16 | Sound Proofing | 2.00 | 64.0 | 128 | 30.0 | 60 |
| 17 | Fuel Lines | 2.00 | 67.0 | 134 | 32.0 | 64 |
| 18 | Fuel Tanks | 17.16 | 70.5 | 1,210 | 32.0 | 548 |
| 19 | Main Gear | 50.00 | 77.0 | 3,850 | 12.0 | 600 |
| 20 | Wing | 180.00 | 77.5 | 13,950 | 27.5 | 4,950 |
| 21 | Canopy | 14.00 | 81.0 | 1,134 | 56.0 | 785 |
| 22 | Belts and Cushions | 4.00 | 88.5 | 354 | 32.0 | 128 |
| 23 | Controls | 33.00 | 90.0 | 2,970 | 34.5 | 1,138 |
| 24 | Cockpit and Position Lights | 1.00 | 93.5 | 94 | 43.5 | 43 |
| 25 | Fuselage | 80.00 | 104.0 | 8,320 | 38.0 | 3,040 |
| 26 | Rotary Beacon | 1.00 | 129.0 | 129 | 27.5 | 28 |
| 27 | Vertical Tail | 10.20 | 205.0 | 2,090 | 78.0 | 795 |
| 28 | Horizontal Tail | 17.50 | 213.5 | 3,740 | 52.0 | 910 |
| | | $\sum$=748.91 | | $\sum$=47,263 | | $\sum$=26,736 |

$$\text{Horizontal Position of C.G.} = \frac{47,263}{748.91} = 63.2"$$

$$\text{Vertical Position of C.G.} = \frac{26,736}{748.91} = 35.7"$$

The maximum Aft C.G. Position is the most critical for stability; therefore, this will be calculated first. The most rearward C.G. position will occur under the following assumption:

No oil in the engine tank
Baggage overload (assume 60 lbs.)
Two heavy passengers
Airplane in climb, assume 1/2 fuel in tanks piled up in the rear half of the tanks

## TABLE 15 - MAXIMUM AFT C.G. POSITION

| Item | Description | Weight | Horz. Arm. | Horz. ~~Arm.~~ Mom. | Vert. Arm. | Vert. ~~Arm.~~ Mom. |
|---|---|---|---|---|---|---|
| | Basic Airplane | 748.91 | 63.2 | 47,263 | 35.7 | 26,736 |
| 29 | Pilot | 170.00 | 82.0 | 13,940 | 36.0 | 6,120 |
| 29a | Passenger | 170.00 | 82.0 | 13,940 | 36.0 | 6,120 |
| 30 | Baggage | 60.00 | 100.0 | 6,000 | 42.0 | 2,520 |
| 31 | 12 Gallon Fuel in Rear of Tanks | 72.00 | 80.0 | 5,760 | 32.0 | 2,302 |
| | | $\Sigma$ = 1220.91 | | $\Sigma$ = 86,903 | | $\Sigma$ = 43,798 |

$$\text{Horizontal Position of C.G.} = \frac{86,903}{1220.91} = 71.2"$$

$$\text{Vertical Position of C.G.} = \frac{43,798}{1220.91} = 36.0"$$

The leading edge of the wing is at 56.5" from the reference line. therefore the horizontal distance between the wing leading edge and the C.G. wi11 be:

$$d = 71.2 - 56.5 = 14.7 \text{ in.}$$

And in % of wing chord:

$$d(\%) = \frac{14.7 \text{ in.}}{50 \text{ in.}} * 100 = 28.4\%$$

This value looks good. In general, it is desirable to keep the C.G. at any condition ahead of the 30% of the Mean Aerodynamic Chord.

The most forwar C.G. position should be calculated next. This condition is critical for elevator dimensioning, as will be seen in the next volume.

The most forward C.G. occurs under the following assumptions:

No Baggage - No passenger - No fuel

Very light pilot

Maximum oil in the engine tank

## TABLE 16 - MAXIMUM FORWARD C.G. POSITION

| Item | Description | Weight | Horz. Arm. | Horz. Mom. | Vert. Arm. | Vert. Mom. |
|---|---|---|---|---|---|---|
| | Basic Airplane | 748.91 | 63.2 | 47,263 | 35.7 | 26,736 |
| 29 | Pilot | 120.00 | 82.0 | 9,840 | 36.0 | 4,320 |
| 32 | Oil (1 gallon) | 7.50 | 28.0 | 210 | 31.0 | 233 |
| | | $\Sigma$ = 876.41 | | $\Sigma$ = 57,313 | | $\Sigma$ = 31,289 |

$$\text{Horizontal Position of C.G.} = \frac{57,313}{376.41} = 65.5''$$

$$\text{Vertical Position of C.G.} = \frac{31,289}{876.41} = 35.7''$$

And in % of wing chord:

$$65.5 - 56.5 = 9.0 \text{ in.}$$

$$\frac{9.0}{50} * 100 = 18\%$$

This value also looks good. For preliminary design purposes, the Maximum Forward C.G. should be kept behind 15% of the Mean Aerodynamic Chord.

And finally the C.G. for airplane Gross Weight is calculated. Obviously, it must fall between the two extremes calculated befare:

TABLE 17 - MAXIMUM WEIGHT C.G. POSITION

| Item | Designation | Weight | Horz. Arm. | Horz. Mom. | Vert. Arm. | Vert. Mom. |
|---|---|---|---|---|---|---|
| | Basic Airplane | 748.91 | 63.2 | 47,263 | 35.7 | 26,736 |
| 29 | Pilot | 170.00 | 82.0 | 13,940 | 36.0 | 6,120 |
| 29a | Passenger | 170.00 | 82.0 | 13,940 | 36.0 | 6,120 |
| 30 | Baggage | 40.00 | 100.0 | 4,000 | 42.0 | 1,680 |
| 31 | Fuel (25 gal) | 150.00 | 70.5 | 10,775 | 32.0 | 4,800 |
| 32 | Oil (1 gal) | 7.50 | 28.0 | 210 | 31.0 | 233 |
| | | $\Sigma$ = 1286.41 | | $\Sigma$ = 90,128 | | $\Sigma$ = 45,689 |

$$\text{Horizontal Position of C.G.} = \frac{90,128}{1286.41} = 70.1''$$

$$\text{Vertical Position of C.G.} = \frac{45,689}{1286.41} = 35.5''$$

And in % of wing chord:

$$d = 70.1 - 56.5 = 13.6 \text{ in.}$$

$$\frac{13.6}{50} = 27.2\%$$

If the C.G. does not fall between the desired extremes, something must be shifted. Fuel and passengers should be located as clase to the C.G. as possible so the changes in trim will be minimized. Other items could be moved around within their own limitations.

The most common remedy in case of trouble is to move the engine. In extreme cases use ballast, but this certainly is a poor solution. The best way is to start all over leaving everything in its place except the wing which is moved to the desired position. This "trial and error" process should be repeated as many times as required. Good Luck!

3) The M.A.C. of the entire wing will be:

$$M.A.C. = \frac{c_1 A_1 + c_2 A_2}{A_1 + A_2}$$

4) The distance from the Airplane Center Line to the M.A.C.:

$$y = \frac{y_1 A_1 + y_2 A_2}{A_1 + A_2} \qquad (y_1 = a_1/_2)$$

5) The distance from a spanwise reference line to the M.A.C.:

$$x = \frac{x_1 A_1 + x_2 A_2}{A_1 + A_2}$$

6) The distance from a Reference Plane to the M.A.C.: (See Figure 60 - Front View)

$$z = \frac{z_1 A_1 + z_2 A_2}{A_1 + A_2}$$

## D) Elliptical Wing

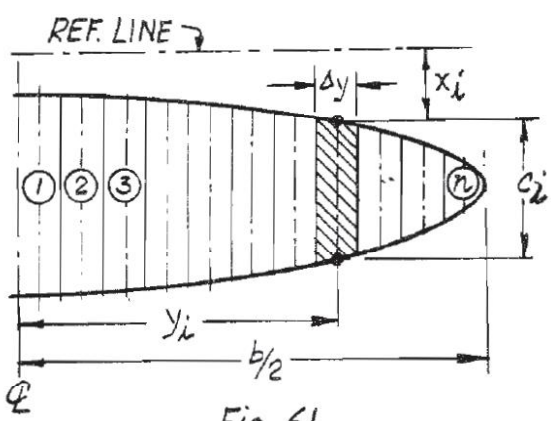


Fig. 61

1) Divide the wing in "n" strips of equal width ($\Delta y$).
2) Measure the mean chord of each strip ($c_i$) and the distance from the airplane center line to the strip mean chord ($y_i$).
3) Prepare Table 18.
4) Add Columns 2, 3, 5 and 7.
5) The M.A.C. of the wing will be:

$$M.A.C. = \frac{\Sigma\, 3}{\Sigma\, 2}$$

**TABLE 18**

| 1 | 2 | 3 | 4 | 5 | 6 | 7 |
|---|---|---|---|---|---|---|
| Strip Number | Strip Chord | 2 x 2 | Distance to ℄ | 2 x 4 | Distance to Ref. Line | 2 x 6 |
| 1 | $c_1$ | $c_1^2$ | $y_1$ | $c_1 y_1$ | $x_1$ | $c_1 x_1$ |
| 2 | $c_2$ | $c_2^2$ | $y_2$ | $c_2 y_2$ | $x_2$ | $c_2 x_2$ |
| 3 | $c_3$ | $c_3^3$ | $y_3$ | $c_3 y_3$ | $x_3$ | $c_3 x_3$ |
| - | - | - | - | - | - | - |
| - | - | - | - | - | - | - |
| - | - | - | - | - | - | - |
| n | $c_n$ | $c_n^2$ | $y_n$ | $c_n y_n$ | $x_n$ | $c_n y_n$ |
| $\Sigma$ | ------- | ------- | | ------- | | ------- |

6) The distance from the Airplane Center Line to the M.A.C.

$$y = \frac{\Sigma\ 5}{\Sigma\ 2}$$

The distance from a spanwise reference line to the M.A.C.

$$x = \frac{\Sigma\ 7}{\Sigma\ 2}$$

## [illegible] "[illegible]"

## [illegible]ome [illegible] se[illegible]l [illegible]on[illegible]ersion [illegible]actors

| Multiply | By | To Obtain | Multiply | By | To Obtain |
|---|---|---|---|---|---|
| Atmosphs. | 14.69 | Lbs/sq. in. | kilogs | 2.204 | pounds |
| Atmosphs. | 2,116. | Lbs/sq. ft. | kilogs | 35.27 | ounces |
| Centimets. | .3937 | inches | kilog/sq.m | .2048 | lbs/sq. ft. |
| Centimets. | .0328 | feet | kilomets | .6213 | miles |
| cm./sec. | .0328 | feet/sec | knots | 1.688 | feet/sec. |
| Cubic cm. | .0610 | cubic in. | knots | 1.151 | miles/hr |
| Cubic ft. | 1,728. | cubic in. | liter | .2641 | gallons |
| Cubic ft. | 7.481 | gallons | meters | 39.37 | inches |
| Cubic ft. | .0283 | cub. meters | meters | 3.280 | feet |
| Cubic in. | 1/231 | gallons | miles | 5,280 | feet |
| Feet | 12 | inches | miles | 1.609 | kilomets. |
| Feet | 1/3 | yards | miles/hr. | 1.466 | feet/sec. |
| Feet | 30.48 | centimet. | miles/hr. | .8683 | knots |
| feet/min | .0113 | miles/hr. | Naut. mi. | 6,080 | feet |
| feet/sec | .6818 | miles/hr. | Naut. mi. | 1.151 | miles |
| feet/sec | .5920 | knots | ounces | 1/16 | pound |
| gallons | 231 | cubic in. | ounces | 28.35 | grams |
| gallons | .1336 | cubic feet | pounds | 453.6 | grams |
| gallons | 3.785 | liters | pounds | 16 | ounces |
| gallons | .8326 | imp. gallons | lbs/sq. ft | 4.882 | kilog./sq. m. |
| Horsepower | 33,000 | ft. lb/min. | quarts(liq | 57.75 | cub. in. |

Standard Gravity (g) = 32.174 ft/sec.$^2$

Atmospheric Standard at Sea Level:
Pressure: 29.92 in hg = 2116 lb/ft$^2$
Temp. NACA: 59° F.
Density = 0.002378 lb$^2$/ft$^4$

## REFERENCES

| Ref. | Publication Title | Author | Comments | Editor & Address |
|---|---|---|---|---|
| 1 | Civil Air Regulations Part 3 | Civil Aeronautics Board | Goverment publication wich estabilishes standard regulations for aircraft certification | U.S. Government Printing Office Washington 25, D.C. |
| 2 | NACA Industry Conference on Personal Aircraft | NACA - Staff Members | This publication is a very valuable source of inforrnation for small aircraft designers | NASA Office of Scientific and Technical Information |
| 3 | Weight Handbook | S.A.W.E. | A reference book which contains the weight of thousands of standard parts, raw materials, liquids,etc. An abbreviated pocket book could be obtained for $1. | Robert G. Farr - 8428 Lurline Canoga Park, California Executive Secretary Society of Aeronautical Weight Engineers |
| 4 | NACA Technical Report 927 - Appreciation and Prediction of Flying Qualities | W.H. Phillips | Summary Data to provide satisfactory stability and control characteristics | U.S. Government Printing Office Washigton 25, D.C. |
| 5 | NACA Technical Report 824 - Summary of Airfoil Data | Abbot, Doenhoff & Strivers Jr. | Ordinates and characteristics curves for a great number airfoils | U.S. Government Office Washigton 25, D.C. Out of Print - See Ref. 6 |
| 6 | Theory of Wing Sections (boo) | Abbot & Doenhoff | Contains all information of Ref. 5 plus more material. Extremely valuable book for $2.95 (Paper back) | Dover Publication, Inc. 180 Varick Street New York 14, New York |
| 7 | NACA Technical Note 1945 - Aerodynamic Characteristics | L.K. Loftin & H.A. Smith, NACA | This report shows the influence of the R.N. on the airfoil characteristics | NASA, Office of scientific and Technical Information Washington 25, D.C. |
| 8 | Technical Report 903 - | L.K. Loftin | This report | U.S. Government |

| | | | | |
|---|---|---|---|---|
| | Theoretical and Experimental Data for a number of NACA 6A-series Airfoil Section | | presents aerodynamic and geometric data on NACA 6A-series airfoils, designed to eliminate the trailing edge cusp characteristics of the NACA 6-series sections | Printing Office Washington 25, D.C. |
| 9 | The Aerodynamic Characteristics of Flaps Aeronautical Research Council, Technical Report No. 2622 | A.D. Young | A very complete summary on aerodynamics characteristics of every type of flaps | Her Majesty's Statinery Office - London - England |
| 10 | Airplane Perfomance Stability and Control | C.D. Perkins and R.E. Hage | A college text book, and a classical reference book for stability and control work | John Wiley & Sons Inc. New York |
| 11 | Fluid Dynamic Drag | S.F Hoerner | The most complete book on drag. Probably the only technical book ever to found beside a bed in the morning. Fascinating! | S.F. Hoerner - 148 Busted Drive - Midland Park, New Jersey |
| 12 | Airplane Design | K.D. Wood | A text book of airplane design with special emphasis on costs. | University Bookstore Boulder, Colorado |
| 13 | NACA Technical Report 823 - Experimental verification of a simplified Vee-tail theory and analysis of available data on complete models with Vee-tails | P.E. Purser and J.P. Campbell | Vee-tails do not provide reduction in area compared with conventional tail. Methods for designing Vee-tails. | U.S. Government Printing Office - Washington 25, D.C. |
| 14 | Technical Report 665 - Calculations of the Aerodynamic Characteristics of tapered wings with partial span flaps | H.A. Pearson and R.F. Anderson | This Report also represents wind tunnel test of flapped 23012 and 23015 airfoils and complete wings partial span flaps. | U.S. Government Printing Office Washington 25, D.C. |
| 15 | NACA WR L-95 - A Method for predicting the elevator | R.F. Goranson | This report is mostly useful | NASA - Office of Scientific and |

| | | | | |
|---|---|---|---|---|
| | deflection requires for land | | for elevator dimensioning | Technical Information - Washington 25, D.C. |
| 16 | Airplane Design Manual | F.K. Teichmann | A great source of information, easy reading, covers all aspects of design in great detail | Pitman Publishing Company - New York |
| 17 | Practical Lightplane Design and Construction | W.J. Fike | A useful source of information with much practical data | W.J. Fike - Anchorage, Alaska |
| 18 | Air Associates Catalog | Air Associates | All Standard Parts needed in an airplane are listed here: Dimensions, Weight, specs. | Air associates Inc. Teterboro Air Terminal, Teterboro, New Jersey |
| 19 | AGARD Report 811 - Factors Affecting the Field Lenght of STOL Aircraft | G.W. Johnston | Perfomance implication as reflected by the requirement of operating aircraft from 500 foot fields | NASA - Office of Scientific and Technical Information - Washington 25, D.C. |