FLYING FLEAS

Technical Notes for the Amateur

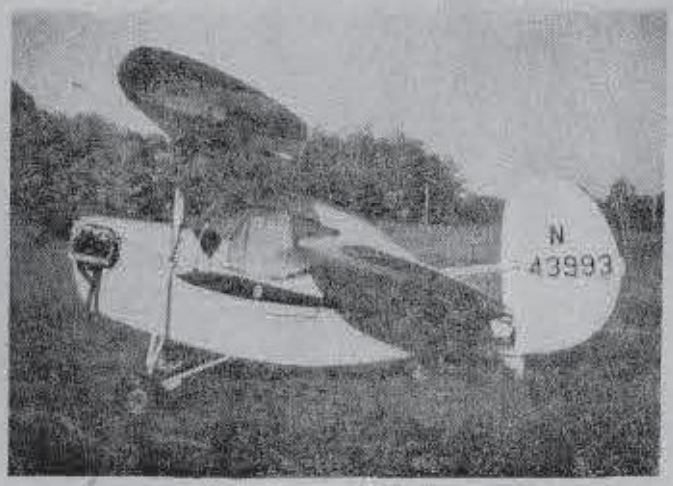

GEORGES JACQUEMIN

FLYING FLEA ARCHIVE USA

FLYING FLEAS

Technical Notes For the Amateur

Georges Jacquemin

FLYING FLEA ARCHIVE USA
P. O. Box 892, Wooster, Ohio 44691-0892

FIRST PRINTING
First Printing, 1996

Cover and typesetting: Flying Flea Archive USA
Cover photograph: Frank Easton's HM-20 variant

FLYING FLEA ARCHIVE USA
P. O. Box 892
Wooster, Ohio 44691-0892, U.S.A.

CONTENTS

FLYING FLEAS

Technical Notes For the Amateur

NOTES ABOUT FLYING FLEAS

1. INTRODUCTION

With many Flying Fleas reaching the last stages of construction, amateur builders will need sufficient information about this rather unconventional aircraft in order to successfully carry out the test flying, adjust the airframe to give good performance, and have a general understanding of the problems associated with the operation of their aircraft.

For many the Flying Flea remains a mysterious kind of aircraft and a number of rumors linger from the pre-World War II era when a so-called "ban" was imposed on the first model Flying Flea -- the HM-14.

The technical difficulties were solved many years ago and the results of theoretical analysis and experimental work have been published in various French aeronautical publications. Since these articles were never translated, English-speaking countries were not made aware that the early problems no longer existed.

It is the purpose of these notes to give the amateur builder a general idea of the aerodynamics of the Flying Flea, of its flight characteristics with the two-control system used for it, and methods on procedure for test flight and airframe adjustments.

DEFINITIONS

In these notes the stall is defined as the sudden loss of lift which occurs on conventional wings when the angle of attack is increased beyond that for which the $C_{L\,MAX}$ occurs. The loss of lift is caused by separation progressing rapidly forward on the wing upper surface. The curve of C_L

vs α shows an abrupt drop under these conditions.

For the purpose of this discussion it will be said that no stall occurs when the C_L vs α curve passes from a positive to a negative slope without the abrupt change and with the negative slope being much smaller than the positive slope, as shown in figure 1.

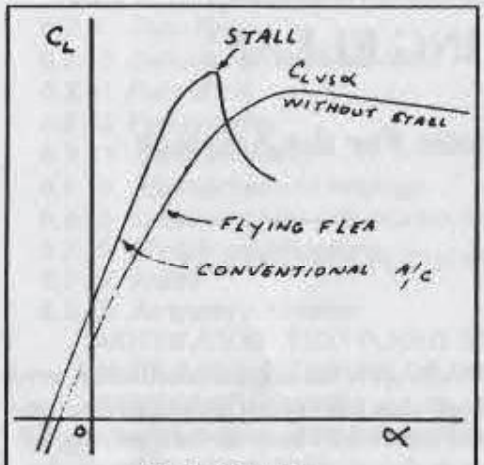

Fig. 1 - C_L vs α

2. *AERODYNAMICS*

In the pre-war era, the aerodynamics of the Flea were clouded by considerable confusion. The aircraft was the product of one man's ingenuity. It had not had the benefit of exhaustive studies in government or manufacturer laboratories. Its appearance was so different from the accepted aircraft practice that it looked indeed like a very mysterious machine and it is still considered in this fashion by many.

The Flying Flea was variously described as a biplane with large stagger; a tandem-wing; a slotted wing; etc.. We know now that it is really none of these but, very simply, a more conventional aircraft having a large tail of very short moment.

The fact that the controls are not conventional is only a matter of Mignet's choice. The aircraft could be flown just as well with the front wing rigidly attached to the fuselage and the control stick operating the rear wing or rear wing flaps, in a conventional elevator manner. Fleas have been flown successfully with these controls. Mignet, however, has always preferred to control via the front wing because the control system is simplified and some amount of gust alleviation is provided in this manner, together with some reduction in the control time-lag.

The absence of ailerons is simply due to the fact that owing to the short wing spans and peculiarity of the wing configuration, the roll induced by yaw is extremely powerful, probably about four or five times as large as on a conventional high wing aircraft. (See articles by M. J. Mottez

-- French magazine *Aviasport*, Nos. 30, 31, 32.) This large induced roll makes the ailerons unnecessary in flight; their only use would be in cross-wind take-off and landing, but they can be replaced by proper manoeuvering techniques which are detailed further on in these notes. Thus, rudder control is sufficient and Mignet found it more convenient to control it with the stick, laterally, or with a wheel as in a car. (This is probably the most objectionable feature of the Flea from the point of view of the pilot of conventional aircraft, as it is contrary to his reactions when taxiing and has led to many minor accidents in taxiing and to aborted take-offs.) This subject is dealt with in more detail further on but in some cases it has been found convenient to restrict the stick to the elevator function and control the rudder via conventional pedals. When this is done, pilots of conventional aircraft do not need special training to fly it. It is felt, however, that although not conventional, Mignet's control system is more rational and its use is universally accepted by Flying Flea amateurs.

Since the Flea is a conventional aircraft with a large tail having a short moment arm, conventional methods of longitudinal stability and control analysis can be applied. More emphasis must be given to the effect of the front wing downwash over the rear wing; this is the only peculiarity.

The advantage of this wing configuration is that although the front wing stalls, the rear wing does not, hence the aircraft does not have a stall

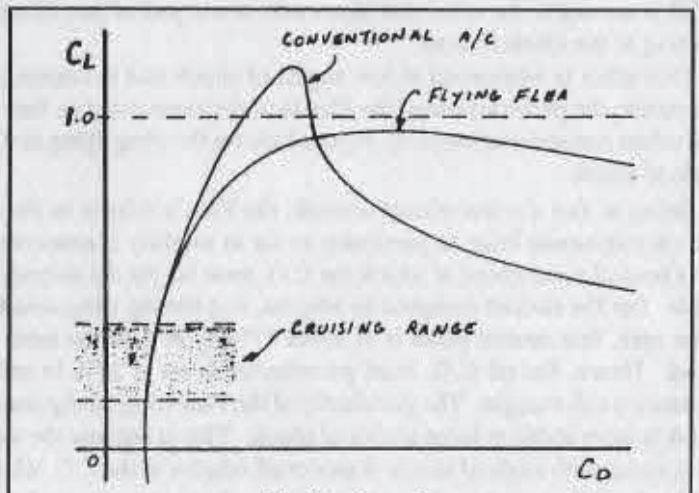

Fig. 2 - C_L vs C_D

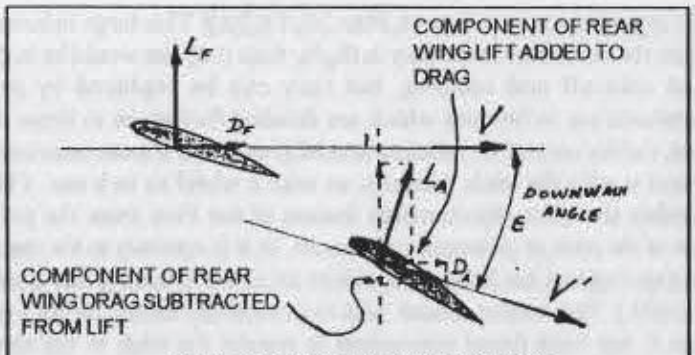

Fig. 3 - Flight at large angle of attack

in the normal sense of the word. It simply reaches the $C_{L\,MAX}$ then goes smoothly to lower C_L with a large increase in drag. However, since the rear wing does not stall, control is maintained at all flight angles and the aircraft can be practically flown beyond the $C_{L\,MAX}$, a regime which is useful for steep descent at low flying speed. Figure 2 shows a comparison between C_L vs C_D curves for a conventional aircraft and for a Flying Flea.

From this figure it can immediately be seen that the drag is considerably higher at high C_L for the Flea than for the conventional aircraft. This is due to the fact that the rear wing is in the downwash of the front wing. Its lift is normal to the wind that blows over it and part of this lift adds to the drag of the whole aircraft.

This effect is minimized at low angles of attack and in cruising configuration; the performance of the Flea is of the same order as that of an equivalent conventional aircraft. Figure 3 shows the wing flying at a large angle of attack.

Being in fact a conventional aircraft, the Flea is subject to the same basic aerodynamic laws, in particular as far as stability is concerned. It has a neutral point ahead of which the C.G. must be, for the aircraft to be stable. For the aircraft designed by Mignet, and having wing area ratios as he uses, this neutral point is at about 27% or 28% of the total wing chord. Hence, the aft C.G. limit permissible is set at 25% in order to maintain a safe margin. The peculiarity of the Flea wing configuration is that it is more stable at large angles of attack. This is because the neutral point varies with angle of attack: it moves aft relative to the C.G. when the angle of attack increases, hence providing a larger margin and a more stable aircraft. The location of the C.G. is selected in such a way that it

will always be ahead of the most forward position of the neutral point. If the C.G. is ahead of the neutral point, the aircraft remains stable in all cases, only more so at large angles of attack. If the C.G. is too far aft, *i.e.* behind the neutral point, the aircraft becomes unstable at low angles of attack although it may still have a good stability at large angles of attack. With a normally balanced aircraft, having C.G. at 25%, the front wing carries about 3/4 of the aircraft weight and the rear wing only 1/4. Since the wing areas are divided approximately 60% front wing and 40% rear wing, the front wing loading is about twice that of the rear wing, thus the rear wing is not used efficiently.

If the stability considerations are overlooked, the use of an aft C.G., by distributing the weight more evenly between the wings, could provide a better overall lift than a forward C.G. Thus, for the amateur who would be unaware of the stability requirements, there exists a natural incentive to fly with aft C.G. This explains how accidents occurred in 1935/36 with underpowered aircraft flying with CGs on or aft of the most forward neutral point. On these aircraft the poor performance was aggravated by the use of a low $C_{L\,MAX}$, the sharp leading-edge airfoil, and insufficient elevator power. A correctly balanced but underpowered Flea may be unable to take-off, or will do so with difficulty. If it flies, the lack of speed will require flight at a high angle of attack, *i.e.* high C_L and also high drag. In other words, the aircraft will be unable to fly at the good cruising values of C_L/C_D. Fortunately, owing to the absence of stall, this situation is not catastrophic as it would be with a conventional aircraft (that is, so long as the engine does not fail).

In order to remedy this defect, two solutions are available: (i) use of a more powerful engine, and (ii) increase of wing area. Since the amateur usually cannot afford to change engines, the best method is to increase the wing area. Although it may seem quite contradictory to conventional aircraft experience, an increase in wing area on a previously underpowered Flea will improve all performances, including cruising speed. This is because the extra drag due to the wing area increment is largely offset by the reduction of induced drag due to flight at lower angle of attack.

In order to give good performance, the following criteria should be checked to be within the specified limits:

$$\text{Quality factor} \quad QF = \frac{W}{S} \times \frac{W}{HP} = \frac{W^2}{S \times HP}$$

where W is the gross weight in lbs.
S is the total area in ft^2
HP is the engine Brake Horse Power

Good performance will be obtained for QF at least 90 and not larger than 135: $90 \leq QF \leq 135$ *(see page 26)*

Furthermore, the front wing loading calculated in the following manner:

$$F = \frac{3/4\ W}{S_f}$$ should not exceed 6.5 PSF with the engines usually available. *(see page 27)*

The formula for the quality factor QF shows the importance of keeping the weight down since QF increases with the square of W. For example, a 10% increase in gross weight increases QF by 21%, which is a considerable increment in view of the fact that QF_{MAX} is only 50% greater than QF_{MIN}. Thus, if a more powerful and heavier engine is used, the power ratio must be such that it matches the square of the weight ratio, in order to preserve the value of QF. Since this is not always practical, it is easier to increase the wing area.

Values of QF smaller than 90 can be used, but correspond to very light wing loading aircraft suitable only for calm weather operation, or to unpowered aircraft (e.g. single seaters with 72 hp McCulloch engines).

3. *FLIGHT CHARACTERISTICS*

The unconventional control system and the absence of ailerons result in some differences in control characteristics compared with conventional airplanes.

3.1 Longitudinal control

The response to elevator control is conventional except that it is somewhat more sensitive than on a tailed airplane. In turbulent air, the stick shakes under the gusts. If no trim device is used, the stick has a pull force of 5 to 10 lbs in cruising flight with C.G. at 25%. Trim can be provided by an adjustable spring pulling the stick aft or by means of tabs at the trailing edge of the front wing. If tabs are used, they should be placed outboard of the area affected by propeller slipstream (see appendix).

As a consequence of control by means of the front wing, the pilot familiar with conventional aircraft will observe that a change from level

flight to climb or descent will be accomplished with only a small change in fuselage angle. This is normal, of course, since the whole aircraft is not rotated to change the wing angle of attack.

3.2 Lateral and directional controls at normal speed

These two functions are performed by only one control: lateral displacement of the stick (or by a wheel). As a result, there is no clear distinction between roll and yaw control, and the aircraft is flown in the same manner as any aircraft with coupled control (for example, an Aircoupe). If the stick is moved sideways and held there, the aircraft will first yaw, then bank and enter into a turn. The turn and bank indicator will show a sideslip at the beginning of the manoeuver but will give perfectly normal readings once the aircraft is in a steady turn. Sharp turns can be made by coupling rudder and elevator in the usual manner when the turn requires a large amount of bank.

Due to the roll/yaw coupling, it is not possible to put the Flea into a steady sideslip. If only roll response is desired (for example in turbulent weather), it is possible to minimize the change of heading by applying an impulse on the stick, *i.e.* by applying some amount of rudder and bringing the control back to neutral. This manoeuver will yaw the aircraft, hence producing the desired rolling moment, but the aircraft will return to a heading only slightly different from the original.

3.3 Lateral and directional controls at low speed

At low speed, *i.e.* in flight at large angles of attack, lateral and directional control remain positive in all cases. As a consequence of the reduced speed, the control power is somewhat reduced but the response is always correct because the aircraft does not stall.

Spins cannot be performed with the Flying Flea because stalling is a prerequisite of spinning. There is therefore no risk of inadvertent spins since the aircraft remains controllable at all times.

3.4 Lateral and directional controls in sharp turns

In a sharply banked turn, a conventional aircraft may stall with the resultant loss of control and spin. Since the Flying Flea does not stall, and adjusts the amount of bank automatically according to the amount of rudder applied, the danger of stalling in a turn is eliminated. If the control stick is pulled too far, the aircraft will fly at a lower C_L beyond the $C_{L\,MAX}$ and at a much higher drag, but will remain stable and controllable.

3.5 Control on the ground, taxiing

If the aircraft is equipped with a wheel for rudder control, it can be driven like a car on the ground, especially if the tail wheel is coupled to the rudder. If the aircraft is equipped with a stick for rudder control, it must be steered in the same manner as in flight, *i.e.* stick to the left will produce a left turn and stick to the right a right turn.

It will be noted that when the aircraft is controlled via a stick, the control manoeuver is opposite to what a pilot of conventional aircraft is trained to do. In order to execute a left turn while taxiing a conventional aircraft, the pilot will apply left rudder by pushing his left foot but, in order to take advantage of the induced drag of his ailerons, he will also put the stick to the right in order to drop the left aileron. This manoeuver of the stick is exactly opposite to what is required with the Flea. This is the peculiarity which has been responsible for many minor accidents with pilots of conventional aircraft surprised by the unconventional control, resulting in ground loops and difficulties during the take-off run. Thus, ***no pilot of conventional aircraft should attempt to take-off until he has thoroughly familiarized himself with the unconventional control.*** *i.e.* he must spend some time taxiing around until he is able to steer the aircraft normally. Once airborne, he will have no difficulties.

3.6 Take-off and landing in a crosswind

With any aircraft having a light wing loading, take-off and landing in a crosswind are delicate manoeuvers. With the Flying Flea, the absence of ailerons makes it impossible to cancel out the rolling moment due to the crosswind. The only way this moment can be taken care of, is by using the reaction of the wheels on the ground. The recommended manoeuvers are as follows:

3.6.1 Crosswind take-off

The aircraft will be held along the runway centerline by making use of the rudder but the stick will be held fully forward in order to maintain as much as possible of the aircraft weight on the wheels during the acceleration run. Holding the stick fully forward will also reduce the induced roll to a minimum. Once take-off speed is reached, the pilot will move the stick both aft and to the windward side in order to both cancel out the angle of yaw (thereby the induced rolling moment) and lift the aircraft off the ground.

3.6.2 Crosswind landing

By comparison with a conventional aircraft, the Flea must be flown at an approach speed somewhat higher than for a normal landing. The Flea will be landed "on the wheels" (not 3-points). Due to the crosswind, it will come close to the ground in a crabbing attitude. The pilot will let the excess speed be spent and, at the moment of contact, he will both (a) turn the aircraft in the axis of the runway by applying rudder and (b) push the stick forward to load the wheels and resist the induced roll. With the elevator control via the front wing, there is no risk of turning over.

3.6.3 Supplemetary notes about crosswind manoeuvers

Both take-off and landing in crosswind would be considerably simplified if a crosswind landing gear could be made available for this aircraft.

Easy!

Both take-off and landing in crosswind require special training on the part of the pilot. The amateur pilot should train himself very carefully by performing them first under conditions of low wind velocity and small angles of crosswind. The angle of crosswind will be increased in steps until the procedure is well mastered in low wind velocity conditions, then the whole procedure will be repeated in higher wind until sufficient proficiency is attained.

It will be noted that the above manoeuvers are not more difficult to perform than with a conventional aircraft; they are only different and, as such, require a different skill. The main difficulty resides in the fact that the amateur must learn them by himself since there are no instructors who, at the present time, can train him. To some extent, it may be possible to duplicate these manoeuvers with a conventional aircraft but there is a serious risk of nosing over with the stick held forward. Also, the rudder would be controlled by means of foot pedals instead of the control stick. Possibly some useful training may be acquired with a two-control aircraft like the Aircoupe.

3.7 Flight at large angles of attack

Since the Flying Flea does not lose the effectiveness of its controls at large angles of attack, it can be flown safely beyond the $C_{L\,MAX}$.

This flight regime is characterized by very high drag and by a negative $C_{L\alpha}$ *i.e.* C_L decreases when the stick is pulled further aft. This regime corresponds more or less to that of a sailplane flying with its airbrakes open. Due to the high drag, the angle of descent is very steep, it can reach 45° in still air. Thus, this manoeuver is useful as a substitute for side-

slipping on approach *(see 3.8, below)*. This manoeuver has often been called a *parachutal descent* when the engine is idling, but it can be performed also with power on. For example, the two-seater HM-350 was able to climb under cruising power with the stick pulled fully aft.

Depending on wing area ratio and C.G. location, this manoeuver can be steady in pitch or with small amplitude pitching oscillation. In all cases, it is very safe and full control is preserved since the rear wing never stalls and turns can be performed without difficulties.

3.8 Parachutal descent on approach

Parachutal descent can be used as a substitute for side-slipping in order to shorten the approach. The manoeuver consists simply of throttling back then pulling the stick fully aft and letting the aircraft stabilize itself in descent. Since the parachutal descent is made at low forward speed, it is necessary to regain speed by pushing the stick forward when reaching about 100 feet altitude, and proceed for a normal landing. Turns can be performed during such descent.

3.9 Take-off speed

Take-off speed is usually taken as 1.20 V_{STALL} for light aircraft. Since the Flying Flea does not stall, the stalling speed seems undefined. However, the stalling speed is also the speed at $C_{L\,MAX}$.

The value of $C_{L\,MAX}$, based on the total wing area, is 0.95 for the Flying Flea. Thus, take-off speed at sea level can be calculated from the following equation or read on figure 4.

At sea level: $$V_{TO} = 24.34 \sqrt{\frac{W}{S}} \text{ (mph)}$$

where W is the take-off weight and S the total wing area.

3.10 Approach speed

The glide speed on approach path is usually taken as 1.3 V_{STALL}. It can be calculated from the following equation, or read on figure 4.

At sea level: $$V_A = 26.37 \sqrt{\frac{W}{S}} \text{ (mph)}$$

3.11 Note about $C_{L\,MAX}$

$C_{L\,MAX}$ has been quoted at 0.95, in para. 3.9. This value seems quite low by comparison with conventional aircraft. It should be noted, however, that this $C_{L\,MAX}$ is based on the total wing area, *i.e.* wing and tail. For

IMPORTANT

DUE TO GROUND EFFECT, THE A/C CAN TAKE-OFF BEFORE REACHING MIN. CONTROL SPEED.

THE A/C MUST BE HELD ON THE GROUND UNTIL TAKE-OFF SPEED INDICATED BELOW IS REACHED

SEA LEVEL

FIGURE 4

FLYNG FLEAS - TAKE-OFF AND LANDING PERFORMANCES

PERFORMANCES BASED ON $C_{L_M} = .35$

IF C_{L_M} IS OBTAINED FROM FLIGHT TESTS AND FOUND DIFFERENT FROM .35, VALUES READ FROM THIS CHART CAN BE CORRECTED BY MULTIPLYING BY $\sqrt{\frac{.35}{C_{L_{M_{EX}}}}}$

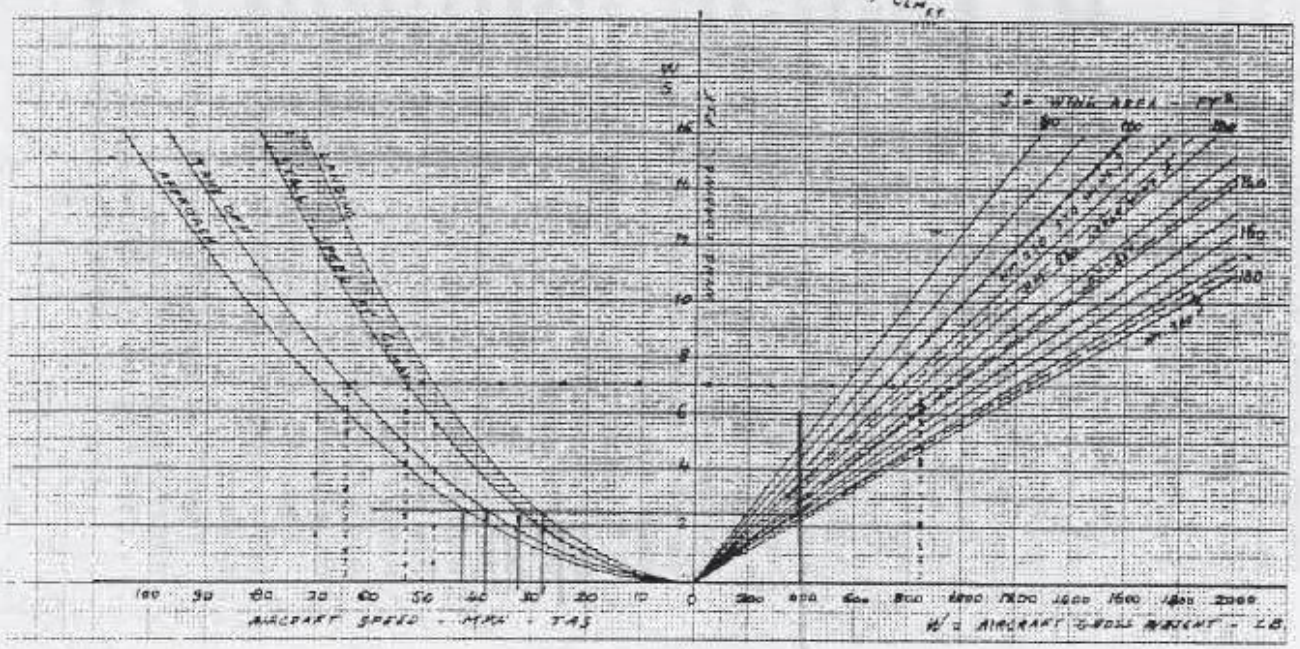

comparison purposes, the values of $C_{L\,MAX}$ x S should be used. It can be shown that there is little difference between the lifting capacity of the Flying Flea and that of a comparable conventional aircraft.

4. AIRFRAME ADJUSTMENT

As a rule, the side view of the aircraft drawn on the drawing shows the cruise configuration. Good performance will be obtained provided that, in flight, the aircraft has the specified fuselage angle and front wing angle of attack in steady cruise conditions.

As a general rule, the fuselage upper longerons will be horizontal, or at some specified angle with respect to the horizontal, and the front wing must have a positive angle of 3° with respect to the horizontal.

Depending on all-up weight, engine power, and C.G. location, the above configuration may not be met. If the aircraft has sufficient power, *i.e.* a low QF (as defined in Section 2), enough adjustment is provided by moving the front wing forward or aft (by adjusting the rear cabane struts). The neutral point will move in the same direction that the wing is moved. Hence, moving the wing FWD corresponds to moving the C.G. AFT, and *vice versa*. Optimum position of the front wing can be calculated by the method given in Section 9.2.

If, with the most aft C.G. permitted, *i.e.* 25%, the aircraft flies with both fuselage and front wing angles in excess of the specified angles, the aircraft is underpowered. This will correspond to high values of QF. The only way to cope with this problem is either to increase the power or, if this is not possible, to increase wing area. The wing area can be increased without too much expense by making new wing center sections for both front and rear wings, having one more rib space on each side. Since the outboard strut will be moved with the new junction, the spar sections need not be modified because this eventuality had been foreseen at the design stage. QF should be checked with the new wing area.

In general, an examination of the value of the factor QF and front wing partial wing loading will predict accurately the performance capacity of the aircraft.

Figure 10, on page 24, shows various configurations on HM-290/293 wings suitable for various engines.

S = Wing Area {Coventional aircraft -- area of wing alone
{Flying Flea -- combined area of both wings

5. *INSTRUMENTATION*

5.1 Rigging

In order to carry out airframe adjustments, two special instruments will be needed: (i) a clinometer, which will be set to indicate zero when the fuselage is in the cruise reference position, (ii) some means of reading the angle of the front wing with respect to the fuselage. Some suggested devices are given in the appendix.

5.2 Measurement of speed

The ordinary pitot head is accurate only within a narrow range of angles of yaw and pitch. Since the only convenient installation is at the end of a boom attached to the front wing outside the propeller circle, the pitot head will be subjected to large changes of angle with respect to the relative wind. The speed adjustments will be correct at and near cruising speed, but at large angle of attack the error will be such that the indicated speed will fall near zero.

The use of a Kiel tube would cure this condition so far as total head is concerned, but would not correct the static pressure. Hence, a weather vane pitot head must be used. Such an installation is shown in the appendix.

6. *FLIGHT TESTING*

6.1 General

Flight testing of any aircraft must be carried out with great care and according to a set of standardized rules in order to ensure the safety of both the pilot and the machine, and to make sure that a systematic investigation of the flight characteristics is carried out.

The test schedule presented in these notes was first written by W. J. Potocki, Chief Test Pilot of Avro Aircraft Ltd., and modified by D. Rogers, Test Pilot for de Havilland Canada Ltd., for applicability to the Flying Flea. The writer is indebted to Messrs. Potocki and Rogers for giving their time and the benefit of their experience to the pilots who will have to test fly the Flying Flea.

The following test schedule details all steps to be taken by the test pilot prior, during, and after test flying, in order to systematize the procedure and facilitate the writing of a test flight report. *[Note: Whenever possible the Flying Flea Archive USA, Box 892, Wooster, OH 44691-0892, USA, would*

appreciate receiving a copy of the test flight report.] The test schedule is written under the assumption that the aircraft under test has both elevator trim and wheel brakes. For aircraft not equipped with these devices, the appropriate tests will be deleted.

All aircraft should be equipped with elevator trim and some scheme for such devices is shown in Appendix B. It should be noted, however, that trim devices involving springs may induce oscillations in pitch, in the stick-free cases. If oscillations in pitch occur with stick free, it will be necessary to try springs of different spring constant until stick-free stability is satisfactory.

6.2 Test flight schedule

6.2.1 External checks

Mooring points -- Control locking devices -- Access to cockpit -- Access to engine -- Can aircraft be moved on hard surface by one person? -- Security of all removable panels -- Integrity of cabin locks -- Quality of control gap sealing -- Stroke of undercarriage legs -- Can aircraft tail (or nose) be lifted off the ground by one person?

6.2.2 Cockpit layout

Can controls be seen from pilot's seat? -- View all around -- Seating comfort -- Accessibility of all controls in the cockpit -- Control range and static friction -- Seat adjustment -- Suitability of seat belts and shoulder harness -- Adequacy of overturn structure -- Cabin defrosting -- Ease of opening canopy -- Emergency and warning devices -- Instrument panels and console assessment.

6.2.3 Engine starting

Ease of starting -- Position of magneto switches -- Throttle operation necessary to pick-up r.p.m. -- Any priming before starting -- Possibility of over-prime -- Fire precautions and fire-fighting equipment on board -- Idling rpm -- Check instrument responses -- Oil, fuel pressure.

6.2.4 Ground handling

Power required to commence taxi -- Power necessary to maintain taxi -- Power required to turn -- Braking power -- Tendency to nose-over when braking -- Ease of turning by use of rudder alone -- Ability of brakes to hold against full power -- Handling down wind and across wind -- Han-

dling at various taxi speeds.

6.2.5 Ground hops

Align on runway with no crosswind -- Open up against brakes to check engine behavior -- Throttle back, release brakes and open-up the engine -- Accelerate at full power -- Lift aircraft off the ground -- As soon as aircraft becomes airborne, throttle back slightly and hold steady altitude by use of the elevator -- Fly aircraft a few feet off the ground -- Note attitude changes on unstick and trim changes on unstick -- Beware of unstable tendencies giving nose up pitch-up -- Throttle right back and note power of elevator in settling back to the ground -- Repeat as before and check aircraft responses in roll, yaw and pitch -- After touch-down, check ability to hold heading with the use of rudder alone.

6.2.6 Take-offs

Set best trim setting as determined from hops -- Check on speed at which lateral control becomes effective -- Lift-off speed -- Airspeed on unstick -- Change of trim on unstick and control forces -- Note the time to unstick on subsequent take-off -- Comment on visibility over the nose and attitude at initial climb-out -- Approximate take-off distance should now be obtained -- Check engine behavior on initial climb -- Note time to accelerate to best climbing speed.

6.2.7 Climb

Note handling characteristics on the climb -- Note attitude and visibility -- Check noise level -- Check vibration level -- Ease or otherwise of trimming on the climb -- Check for adequate cooling during climb -- Measure rate of climb, through 1,000 feet -- If enough time, carry out partial climbs to determine the best climbing speed.

6.2.8 Stability determination

6.2.8.1 Spiral stability

In smooth air, trim very carefully -- Apply a small amount of bank using rudder -- As soon as 5° of bank achieved, remove rudder to neutral then release all controls free -- If angle of bank *increases* after controls are returned to neutral, the aircraft is spirally unstable -- This can be repeated with the controls held fixed after the rudder is returned to neutral.

6.2.8.2 Longitudinal stability, stick fixed

In smooth air, determine movement of control stick with speed. Stick

forward with increasing speed means aircraft is statically stable, stick fixed -- Stick back to hold reduced speed -- Stick displacement with tape in cockpit.

6.2.8.3 Longitudinal stability, stick free

In smooth air, check trim movement with speed. Forward trimming or increase of speed with increase of stick force on the control column means indication of positive stability, stick free.

6.2.8.4 Short period longitudinal stability, stick fixed

In smooth air, suddenly pull 1 excess "G" and immediately put control in neutral position -- Note consequent aircraft behavior -- This aircraft may tend to oscillate several times, since it is practically tailless -- Note number of cycles and time if oscillations come as a result of step input.

6.2.8.5 Short period longitudinal stability, stick free

As above, but on return of control to neutral, after stick input: let the control free -- Note oscillations, if any; number of cycles and time.

6.2.8.6 Lateral stability, stick fixed and free

In smooth air, trim very carefully -- Apply rudder suddenly displacing the stick 15° to the right, and return immediately to neutral, holding the stick fixed -- Note oscillations, if any; number of cycles and time -- Observe coupling between roll and yaw oscillations -- Repeat with stick to the left -- Repeat with 20° stick displacement -- Repeat with 25° stick displacement -- Repeat whole procedure letting control free after returning to neutral.

6.2.9 Slow flying

Reduce speed in steps until stick is fully back -- Note change of trim -- Note control characteristics as speed is brought close toward the minimum -- Check at what indicated speed the elevator approaches the aft stop -- Check pitching oscillations, if any, at slow speed -- Check lateral control effectiveness at slowest flyable speed -- Note ease of recovery -- Note rate of descent and height loss during recovery to normal speed in flight with engine idling -- Repeat at cruising power -- Note behavior in turning at minimum speed -- Note ease of recovery -- Note buffet-stick forces and control behavior during accelerated pull-up -- Is there any tendency to spin under these conditions?

6.2.10 Behavior in balanced turns

Check aircraft behavior in steady turns at various degrees of bank and several power settings -- Turns in climb and in descent.

6.2.11 Rate of roll

Check amount of wing levelling which can be obtained with minimum change of heading -- Determine if minor heading changes are possible without introducing enough roll to cause weaving.

6.2.12 Partial glides

Power off -- measure sinking speed *vs.* speed.

6.2.13 Climb to ceiling

Measure time to climb to altitude.

6.2.14 Approaches and landings

Power required on downwind leg -- Speed control on approach -- Response to small power changes -- Check attitude and aircraft handling during approach with power on -- Best approach speed -- Stability on approach -- Ease of flare-out -- Ground effects -- Attitude on touch-down -- Landing run-out -- Control through rudder -- Heading hold -- Check transition from parachutal-type descent to normal glide.

6.2.15 Crosswind take-offs and landings

After acquiring familiarity with handling characteristics into wind, determine crosswind capabilities of aircraft, as described in Section 3.6.

6.2.16 Shut down procedure

Make comments on any abnormalities noted.

6.2.17 Notes

For all flight tests, record:

a - Barometric pressure
b - Temperature
c - Wind velocity and direction
d - Time of take-off
e - Duration of flight
f - C.G. location

6.2.18 Airspeed calibration

It will be found that, in general, indicated airspeed will not correspond with the values read from figure 4. The airspeed indicator installation

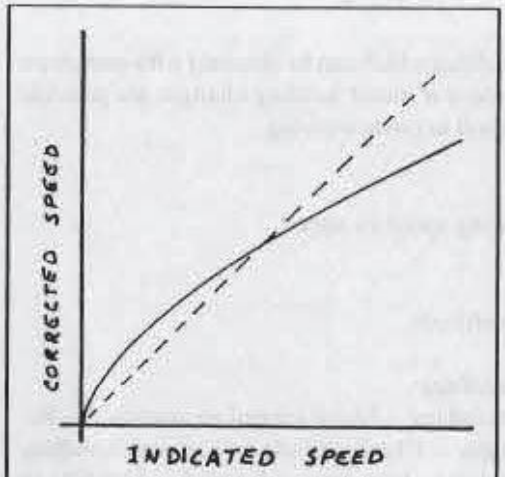

Fig. 5 - Speed Calibration

must be calibrated either by using a trailing bomb and special instruments or by flying side by side with an aircraft whose airspeed indicator has already been calibrated. In the absence of radio, a flight plan should be drawn whereby the speed will be increased in steps of 5 or 10 mph, to be held for 4 or 5 minutes in order to read steady speed. Test to be performed in calm weather. Then a curve similar to that of figure 5 can be drawn.

7. *NOTES ABOUT TEST FLIGHT SCHEDULE*

The test flight schedule presented in Section 6 is written for the test pilot who is familiar with test flight procedures and aircraft dynamics. It is realized that the meaning of some of the paragraphs may seem obscure to the amateur. However, detailed explanations of the reasons cannot be attempted in these notes as it would require a lengthy course in aircraft dynamics.

Briefly, the purpose of these tests is to ascertain that the behaviour of the aircraft is acceptable. Since, at the present time, we have no numerical data to refer to, we must rely on test pilot judgement.

The only numerical data available concerns the HM-350, 90 hp, two-seater aircraft which is unfortunately not available for amateur construction. This data is given below as a guide for slow flying characteristics.

1. Cruising power -- Stick fully aft

Pitching oscillation period	:	approx. 15 sec.
Altitude gain per cycle	:	approx. 80 ft.
Average rate of climb	:	approx. 320 fpm
Speed at which nose drops	:	approx. 35 mph IAS

2. *Engine stopped -- Stick fully aft*

Pitching oscillation period	:	approx. 10 secs.
Altitude loss per cycle	:	approx. 80 ft.
Average rate of descent	:	approx. 480 fpm
Speed at which nose drops	:	approx. 40 mph IAS
Recovery altitude at landing	:	approx. 60 ft.
Landing roll without brakes	:	approx. 300 ft.

The wing loading of the HM-350 is 9 psf

Landing speed: 37 mph IAS

Note that the speed indicator installation has a large error, at low speed, on this aircraft.

Arrangements may be made with French pilots to carry on a series of test flights according to the schedule of Section 6, for HM-290/3 and HM-380.

8. *NOTES ABOUT THE USE OF McCULLOCH ENGINES*

The McCulloch engines 0-100-1 (72hp), 0-90-1 (60hp), are suitable for use on the HM-290 and HM-293 aircraft provided the tip of the propeller blade passes about 4 inches above the leading edge of the front wing, as shown in figue 6. If this condition is not met, there is risk of a reversal of the circulation in the center section of the front wing with resultant loss of lift when power is increased at low speed. This would make take-off difficult and also introduce erratic control action.

Therefore, the small propellers generally used with these engines, on gyrocopters, are not suitable for the Fleas and special propellers must be designed.

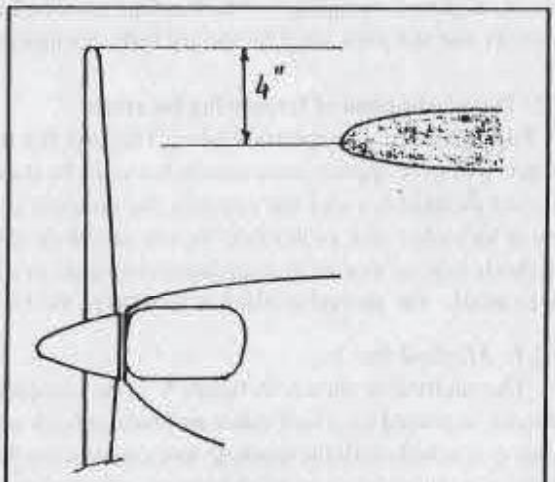

Fig. 6 - Propeller and Front Wing

Note also that the basic McCulloch target drone engine has a life of approx. 75 hours. Improved connecting rod bearings are available which will increase the engine life to 250 hours.

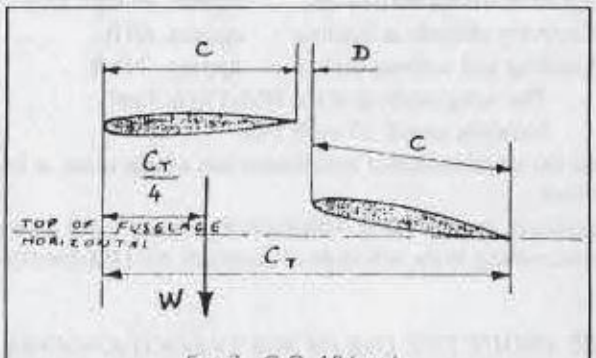

Fig 7 - C.G. Aft Limit

9. *CENTER OF GRAVITY*

9.1 Correct location of the Center of Gravity is of the utmost importance*

The Center of Gravity must be on the vertical at 25% of the total wing chord, as shown in figure 7. The fuselage must be horizontal (check with a level) and the pilot must be aboard fully equipped.

9.2 Determination of front wing location

Two methods are explained here. The first is a trial and error method which will give approximate results but must be done very carefully. The second method is exact but requires the amateur to be familiar with the use of formulae and, preferably, the use of a slide rule or calculator. Both methods require that all measurements be made in a hangar in still air. As an example, the second method is applied to the HM-290.

9.2.1 Method No. 1

The method is shown in figure 8. The complete aircraft, with pilot aboard, is placed on a half roller and moved back and forth until equilibrium is reached, with the fuselage longerons being horizontal. Once equilibrium is obtained, two plumb bobs are adjusted to line up with the roller.

* See also Appendix D.

It is then easy to determine the C.G. location on the fuselage and compare it to the point at 25% of the total chord. Should the C.G. fall forward of the required point, the front wing will be moved forward by about 4 times the measured difference. A new point of equilibrium will be obtained on the roller and corresponding C.G. measured. This process must be repeated several times until a satisfactory C.G. location is obtained.

It is advisable to make a temporary cabane and landing gear out of wood dowels and plywood so that both the landing gear and the front wing may be set in place correctly and easily. A final check will be made with the metallic landing gear and cabane struts in place.

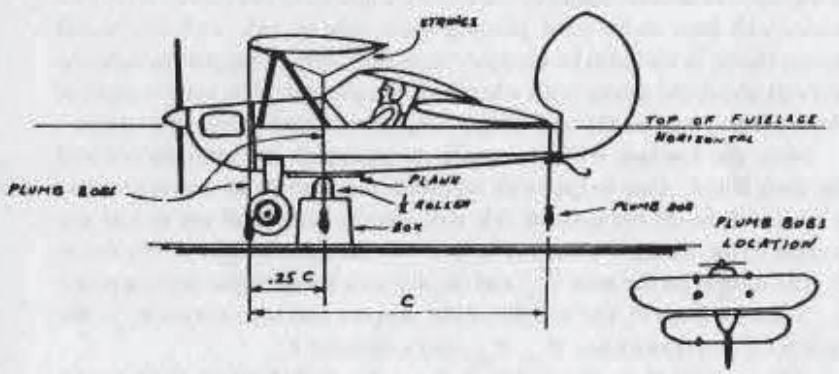

Fig. 8 - Roller Balance

If the fuselage has a keel, it will be necessary to attach a piece of board about 1 ft. wide underneath. This piece of wood will be attached to the landing gear in order to provide lateral stability when the aircraft is on the roller.

9.2.2 Method No. 2 -- Determination of front wing location

This method will be more appealing to the amateur who is familiar with some mathematics. It will fairly easily give the exact location of the front wing. The following procedure will have to be followed step by step. It is applied to the HM-290 as an example.

1. Make a mock-up of the cabane struts out of wood dowels and plywood, to be used for general aircraft assembly in the shop. The final cabane will be made later once the front wing location is calculated.

2. Once the fuselage, rear wing, and rudder are completed, make a mock-up of the landing gear using wood dowels and plywood. Install the wheels.

3. Place this complete assembly (complete aircraft minus front wing) on two scales: one under part No. 30 (fireproof bulkhead) and one under the skid. Level it so that the fuselage is horizontal: use a level. Bathroom scales can be used but they must be checked and curves of "indicated weight vs. real weight" must be plotted for each one. Some of these scales are sensitive to side load. If so, they cannot be used. The weight at the front end will almost certainly exceed the capacity of one scale. If so, two scales will have to be used, placing them side by side with one board across them. It will also be necesary to make a special support to hold the aircraft above the scales with wheels off the ground. The total weight of the front end will be the sum of the weight indicated by the two scales.

Now, the fuselage will be completely equipped, the pilot aboard and the tank filled. One helper will maintain the aircraft so that both front wheels will be off the ground. He will have to be careful not to add any weight to the aircraft. Another helper will read the weight on the front: P_{1t}, the weight on the rear: P_{2w} and the distance between the two supports: L. Subtract from P_{1t} the weight of the support and thus obtain P_{1W}. We now have two quantities: P_{1W}, P_{2W}, and a distance L.

The weight of this assembly is $P_{1W} + P_{2W} = W$, and its C.G. is at a distance $\ell_1 = \frac{P_{2W} L}{W}$ behind the front support.

4. Weigh the complete front wing to obtain w. Place the wing sitting on its pivot fittings, and measure the weight at the trailing edge: P. The distance between pivot and trailing edge is D_2 mm. Hence the Center of Gravity of the wing is

$$D = \frac{D_2 \times P}{w} + D_1 = \text{millimeters behind the leading edge.}$$

The total weight of the aircraft is $W_1 = W + w$

5. Check that the front wheels are at about 280 mm ahead of the C.G. calculated in step 3 (or 380 mm when wheel brakes are used). The landing gear can be made and installed on the aircraft (HM-290/3 *only*).

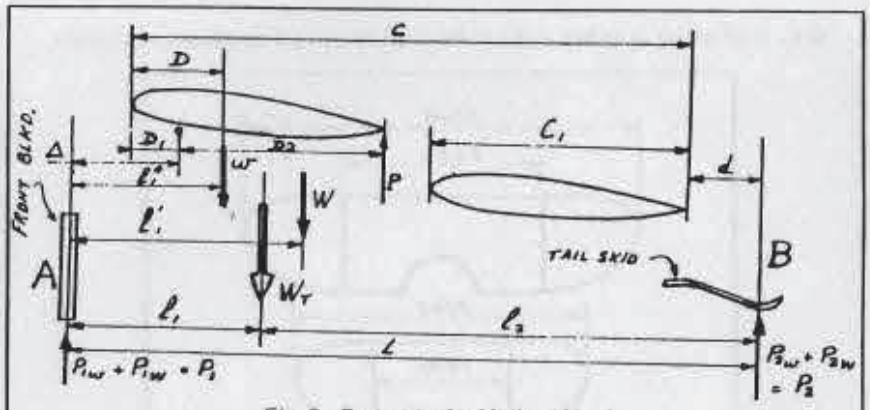

Fig. 9 - Geometry for Method No. 2

6. Repeat step 3 with the completed landing gear. The C.G. may have moved forward a little if the weight W has increased.
7. The position of the front wing is given by the formula:

$$\ell_1'' = -1/2 \left[L \left\{ \frac{P_{1W}}{W} + 1 \right\} \right] + \frac{WT}{w} \left\{ \frac{d}{4} - L \right\} - \frac{W}{w} \ell_1''$$

Editor's Note: A later edition of Jacquemin's booklet gives the alternative equation: $\ell_1'' = \dfrac{W_T (L - d - 3D) - 4.P_{2W}.L}{4w - 3W_T}$

which gives the distance of the wing Center of Gravity behind the front support A.

From step 3, we have found: P_{1W}, P_{2W}, L, ℓ_1'', W.

From step 4: w, D, W_T.

Measure now dimension d between the trailing edge of the rear wing and the support B.

These values can now be substituted into the formula to obtain ℓ_1''. Then the total chord $C = L - d - \ell_1'' + D$ and the position of the front wing pivot: $\Delta = \ell_1'' - D + D_1$ with respect to the front face of the fireproof bulkhead. Δ positive is aft of the bulkhead and Δ negative forward. The cabane struts can then be made to suit these dimensions.

9.3 Do not forget

Position of the Center of Gravity must be checked after any repairs or modifications to the aircraft. Even repainting can shift the C.G. appreci-

ably. Ballasting at either end can be used to correct small discrepancies.

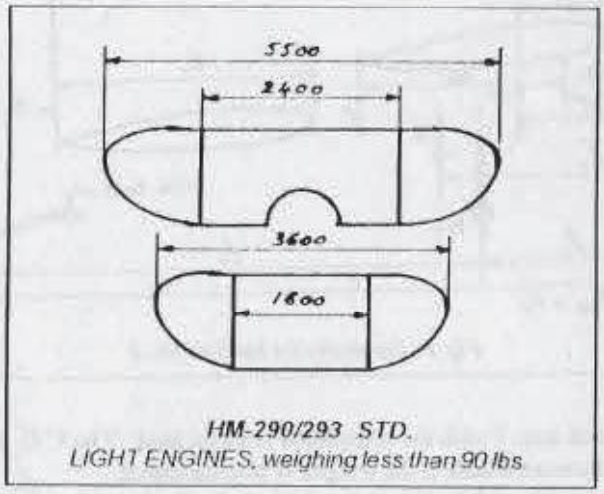

HM-290/293 STD.
LIGHT ENGINES, weighing less than 90 lbs.

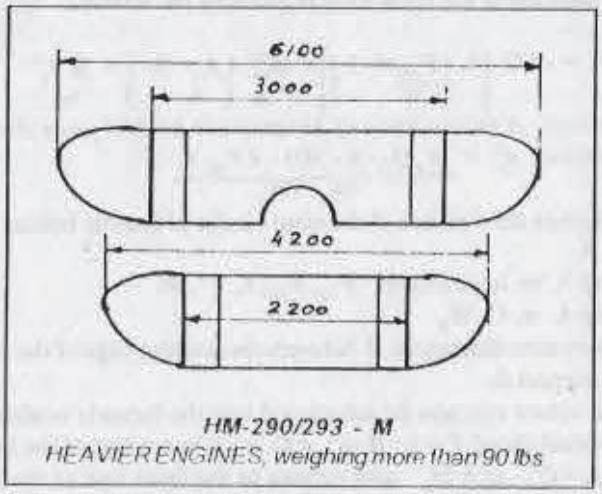

HM-290/293 - M
HEAVIER ENGINES, weighing more than 90 lbs

Fig. 10 HM-290/293 Wing Configuration

Note: For HM-290/293 - M, if it is desired to maintain folded span within 8 feet (2400 mm) all wing hinge fittings must be made from SAE 4130 steel (hinge on upper wing surface only).

10. COCKPIT WAKE AND RUDDER

The Flying Flea, having a short and relatively bulky fuselage, the air flow on the rudder is strongly influenced by the shape of the cockpit. In order to have good rudder effectiveness, the cockpit must have smooth contours to minimize the blunt body effect and allow the rudder to operate in a relatively smooth airflow.

For this reason, Henri Mignet has designed all his latest aircraft with enclosed cockpits. Open cockpits, although attractive, may have a detrimental effect on rudder effectiveness, especially in cases where there is no fairing behind the head and shoulders of the pilot. This problem of the turbulent cockpit wake explains why such large rudders had to be used on the original Flying Flea, the HM-14.

11. LANDING GEAR ADJUSTMENT

During the ground roll, prior to being airborne, and after landing, when the aircraft is travelling at speed below the minimum control speed, it behaves like any land vehicle and, as such, the adjustment of its landing gear is important and must not be overlooked.

Camber and toe-in are given below for each aircraft at max. gross weight:

AIRCRAFT	CAMBER	TOE-IN PER WHEEL
HM-290/3	5°	0° to 1.5°
HM-360; HM-380	2°	1.5°

In cases where brakes are used, the tail skid may be replaced by a wheel on the HM-290, or the tailwheel designed for the HM-360 may be replaced by a simpler model. In all cases care must be taken to select a type which will not be subject to shimmy. The tailwheel can be free or connected to the rudder control: in the latter case the moment arm of the tailwheel to its steering pivot must not exceed 80, or large loads would be induced in the control. The steering pivot must be normal to the ground line when the tailwheel spring is under maximum static load. Tailwheel control must be by cables without springs, as springs may cause shimmy.

QUALITY FACTORS $QF = \frac{W^2}{S \times HP}$

HM-290/3: 5.5mm span; 101ft^2 wing area

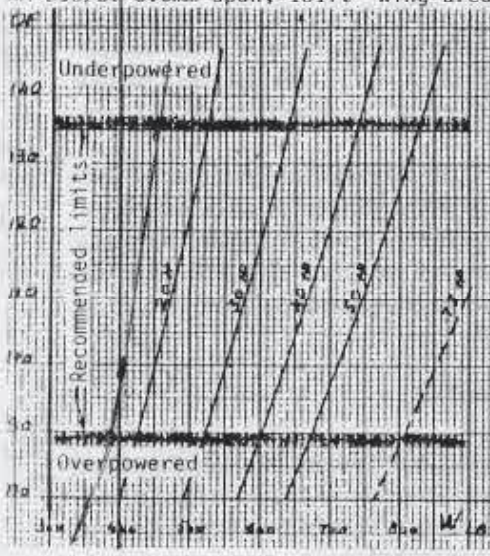

HM-290/3: 6.1mm span; 116.5ft^2 area

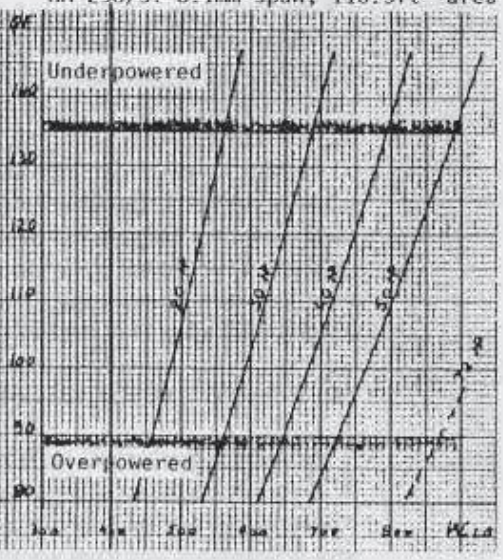

HM-360: 137.6ft^2 wing area

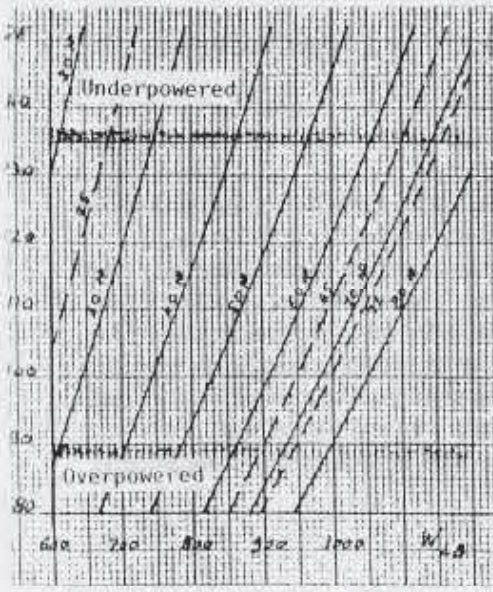

HM-380: 175.1ft^2 wing area

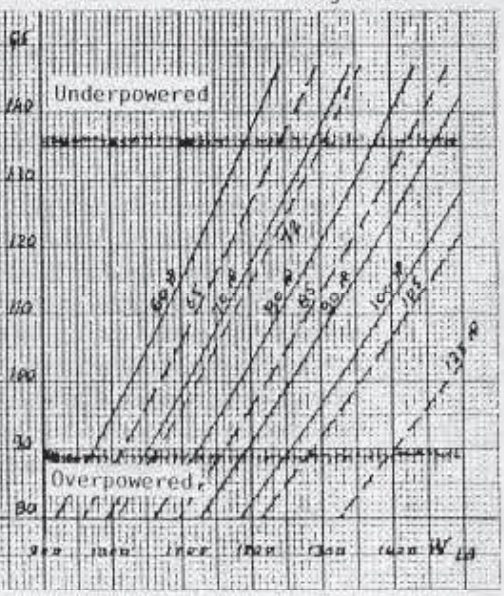

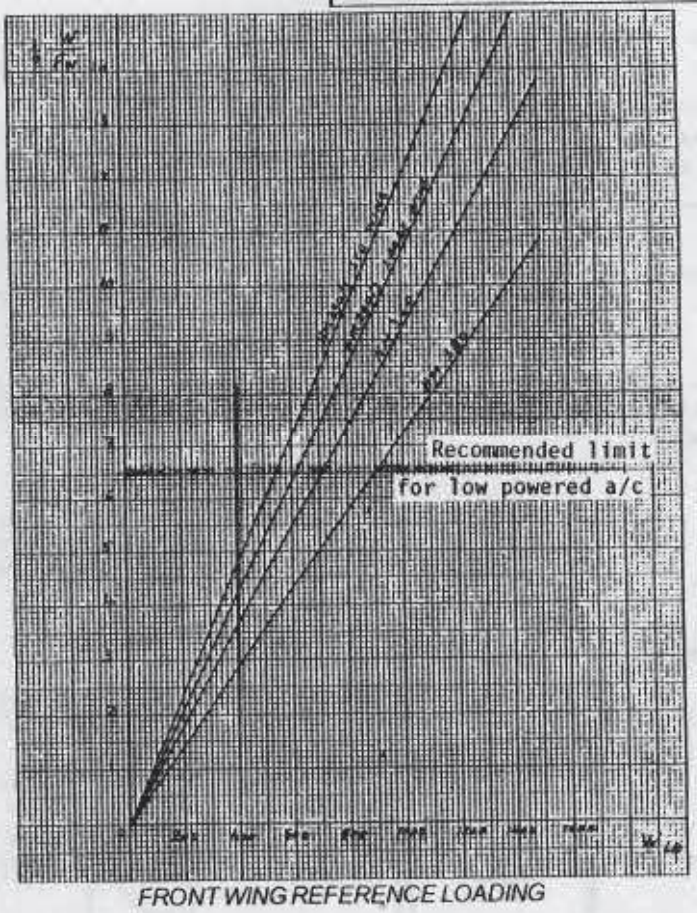

FRONT WING REFERENCE LOADING

APPENDIX A

This appendix shows a number of devices which can be made easily by the amateur in order to assist in making proper airframe adjustment. No drawings are available at the present time for these devices. It is felt that the amateur will have little difficulty in designing his own devices from the suggestions given in this appendix.

IMPORTANT NOTE: All devices using cables and pulleys must have effective means of preventing the cable from jumping off the pulley.

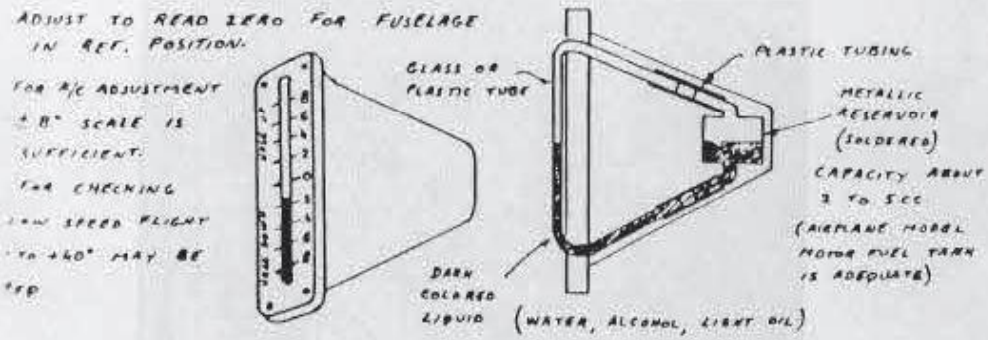

Note A 5cc OR LARGER RESERVOIR WILL ABOUT DOUBLE LIQUID DISPLACEMENT IN VERTICAL TUBE BY COMPARISON WITH A CLINOMETER HAVING NO RESERVOIR

Fig. A-1 Clinometer

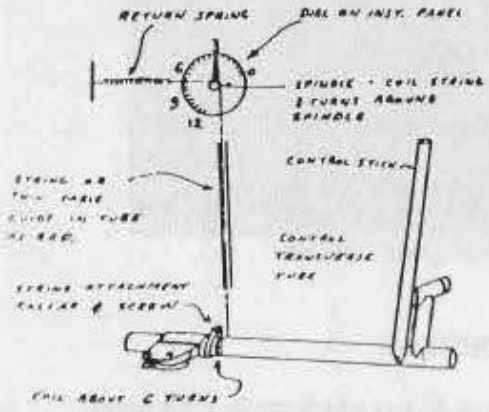

- ATTACH STRING OR CABLE TO TRANSVERSE TUBE BY MEANS OF A SMALL COLLAR
- ADJUST SPINDLE DIA. TO OBTAIN CONVENIENT READING

Fig. A-2 Front Wing Angle Indicator

PROBE ATTACHED TO WING L.E. AND MAIN SPAR OUTSIDE PROP. CIRCLE MOUNT ON FRONT WING

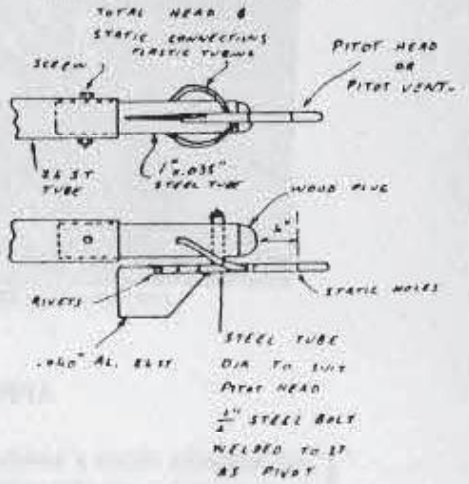

BEARING IN 1.0" STEEL TUBE PIECE OF 5/16" OD STEEL TUBE WELDED AND REAMED ASSEMBLY MUST BE STATICALLY BALANCED

For low speed, use helicopter airspeed indicator (10 to 150 mph) and pitot venturi head

Fig. A-3 Pitot Installation

1. FRONT WING FIXED TRAILING EDGE TABS

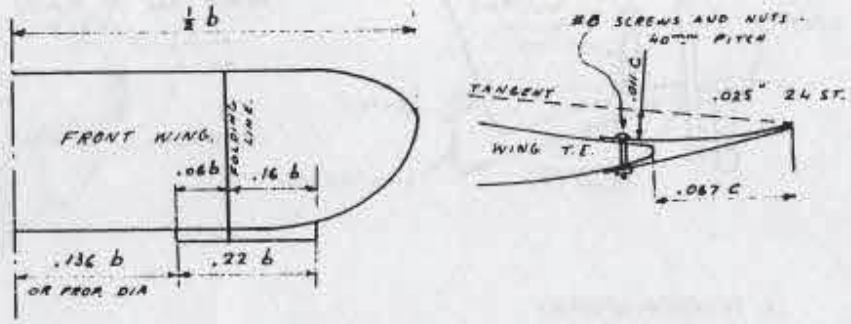

DIMENSION .011C IS APPROX. - USE IT FOR A START AND ADJUST AS REQUIRED TO OBTAIN STICK FREE AT CRUISING SPEED.

2: ADJUSTABLE TAB

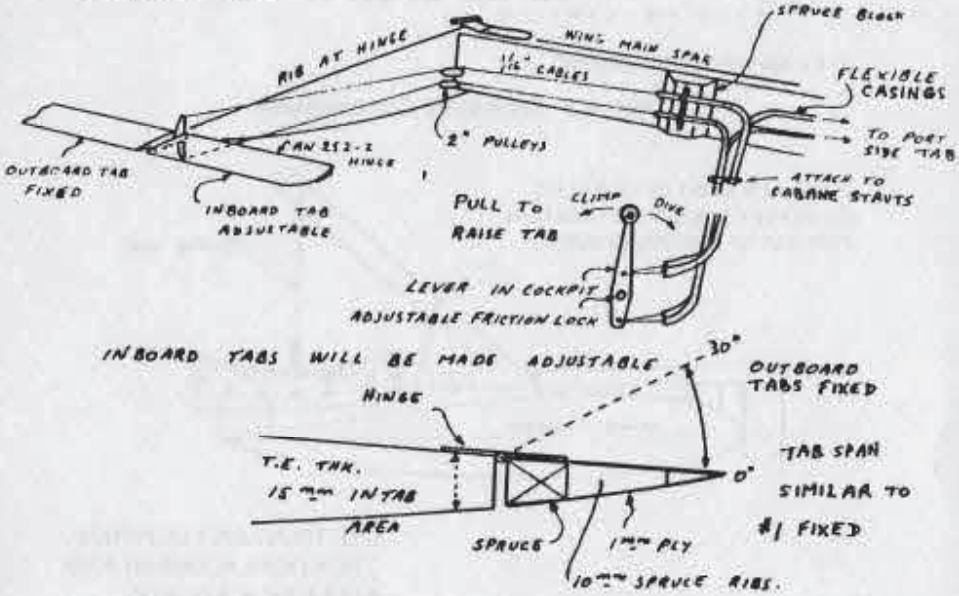

Note: Tabs can also be made within the wing contour

Fig. A-4 Trim Tabs

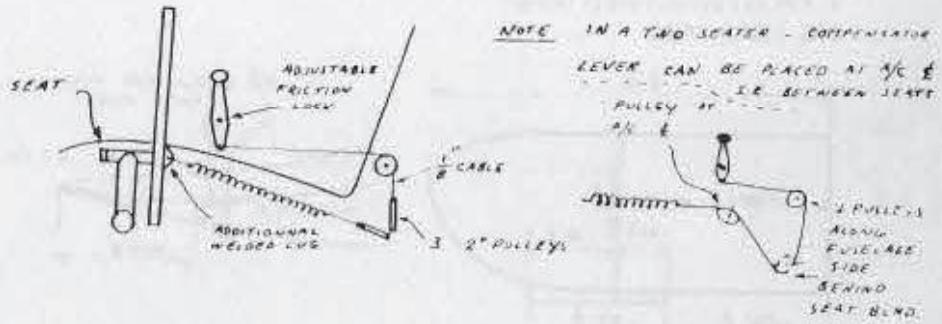

1. TENSION SPRING

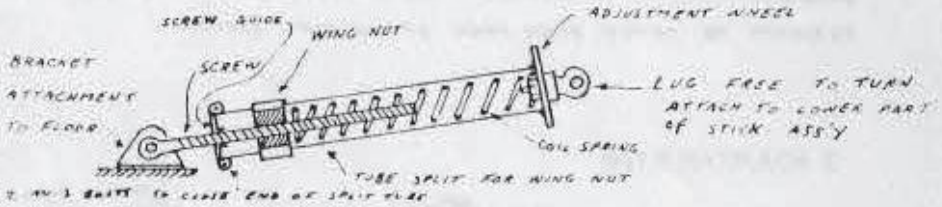

2. COMPRESSION SPRING

Fig. A-5 Stick force Compensator

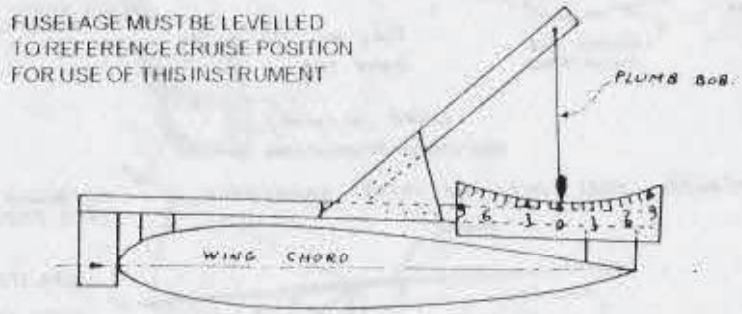

USE TO ADJUST CONTROL STICK DISPLACEMENT AND ANGLE INDICATOR ON INSTRUMENT PANEL

Fig. A-6 Front Wing Incidence Calibrator

APPENDIX B
Rear Wing Trailing Edge Flap

B-1 GENERAL

All Flying Fleas can be equipped with a flap at the trailing edge of the rear wing. This flap will provide easier operation of the aircraft in the flight regime beyond the $C_{L\,MAX}$. The flap arrangement described below is taken from the following papers:

i: *Contribution à l'Étude et au Réglage des Aéronefs de Henri Mignet*
ii: *Expérimentation de l'avion Mignet HM-293 - HB-SUS*
by Louis Cosandey, Fribourg, Switzerland

M. Cosandey did a large amount of experimental work with a Flying Flea glider and his HM-293 in order to present these technical papers to the Federal Air Office of Switzerland.

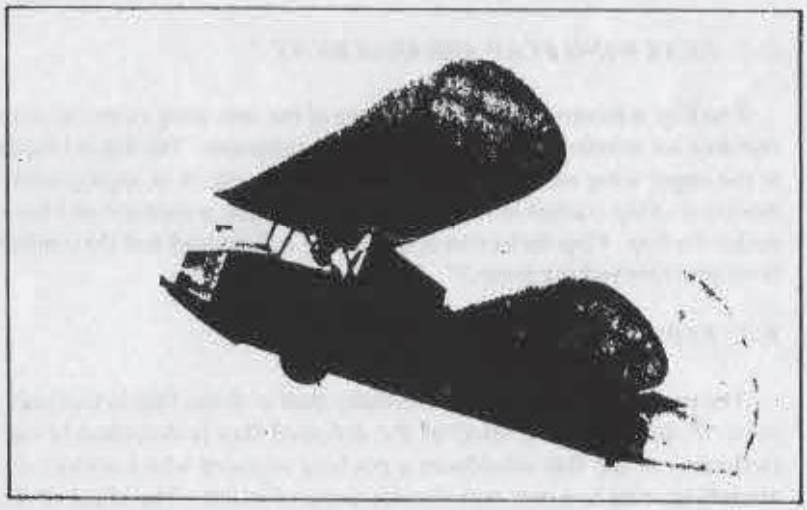

His HM-293 was a modification of the standard HM-293 using NACA 23012 airfoils on both wings; the rear wing being set at 9° with respect to the fuselage.

Front wing span	6.1 m
Rear wing span	4.2 m
Rear wing flap: span	2.1 m
Rear wing flap: chord	0.35 m
Flap motion:	0 to 20° upward

- Flap controlled by a separate lever in the cockpit
- Front wing equipped with fixed tabs to cancel stick force in cruise

Engine: 35hp Poinsard

All-up weight	518 lb
Total wing area	121.5 sq. ft.
Front wing area	72.6 sq. ft.
QF = 63	
F = 5.35 PSF	
Cruising speed	62 mph
Maximum speed	81 mph
Optimum rate of climb	700 fpm at Vi = 43 mph
Take-off distance at 2,300 ft altitude	230 ft.
Landing distance	100 to 200 ft.

B-2 REAR WING FLAP ARRANGEMENT

The flap is located at the trailing edge of the rear wing centre section and does not interfere with the wing folding mechanism. The flap is hinged at the upper wing surface on the rear wing spar, which is appropriately modified. Flap control is via a lever in the cockpit; a pushrod and horn under the flap. Flap deflection is from 0° to 20° upward and the control lever provides locking every 5°.

B-3 EFFECT OF THE FLAP

The papers presented by M. Cosandey deal with the flap in two positions: 0° and 15°. The effect of the deflected flap is described below. Deflection of the flap introduces a pitching moment which rotates the aircraft nose up to a new equilibrium angle of attack. The effect of the flap deflected 15° is considered in two cases:-

1 - Glide with engine idling
2 - Aircraft with cruising power

B-3-1 Glide with Engine Idling and 15° Flap

Stick full forward: Max Speed: V_i = 68 mph
Stick about central: Min Speed: V_i = 27 mph

In minimum speed configuration, the front wing angle is 6° with respect to the fuselage. Pulling the stick further aft puts the aircraft in a "parachutal" descent with no oscillation. Rate of sink of the order of 700 fpm at an indicated speed of the order of 20 mph. The maximum rate of sink was found to be about 790 fpm (13.2 fps), which indicates that the landing gear and fuselage could easily be strengthened to allow hitting the ground safely in this configuration.

If the stick is held for the wing at +6° ($C_{L\,MAX}$) the aircraft will oscillate in pitch; period about two seconds. loss of altitude per oscillation: 15 to 20 ft. Rudder control is normal in all cases. When the flap is returned to zero, the aircraft noses down and returns to normal glide.

B-3-2 Aircraft with Cruising Power - 15° Flap

Stick full forward: Max speed: 48 mph
Stick pulled - wing at 7°: speed: 15 mph (indicated)

With the stick pulled (front wing at 7°), the fuselage reference is at 30° nose up on the trajectory, the front wing angle of attack is thus 37°. In this configuration, all controls respond normally and, upon release of the flap, the aircraft returns automatically to normal flight.

B-3-3 Note About Indicated Speeds

The speeds given above are all indicated speeds. They are accurate in normal configuration (flap at 0°) and near cruising speed, but are not reliable at low speed or at large angles of attack, where the installation measures only one component of the speed. (That is, the true speed is higher than the indicated speed.)

B-4 ADAPTION OF THE FLAP TO OTHER FLEAS

All Flying Fleas can be equipped with this type of flap and figure B-1 sketches some details of design which can be used for HM-290, HM-293 and HM-360.

The use of this flap will be found most convenient to take full advantage of this aircraft's flight characteristics beyond the $C_{L\,MAX}$ for steep descents and short landings.

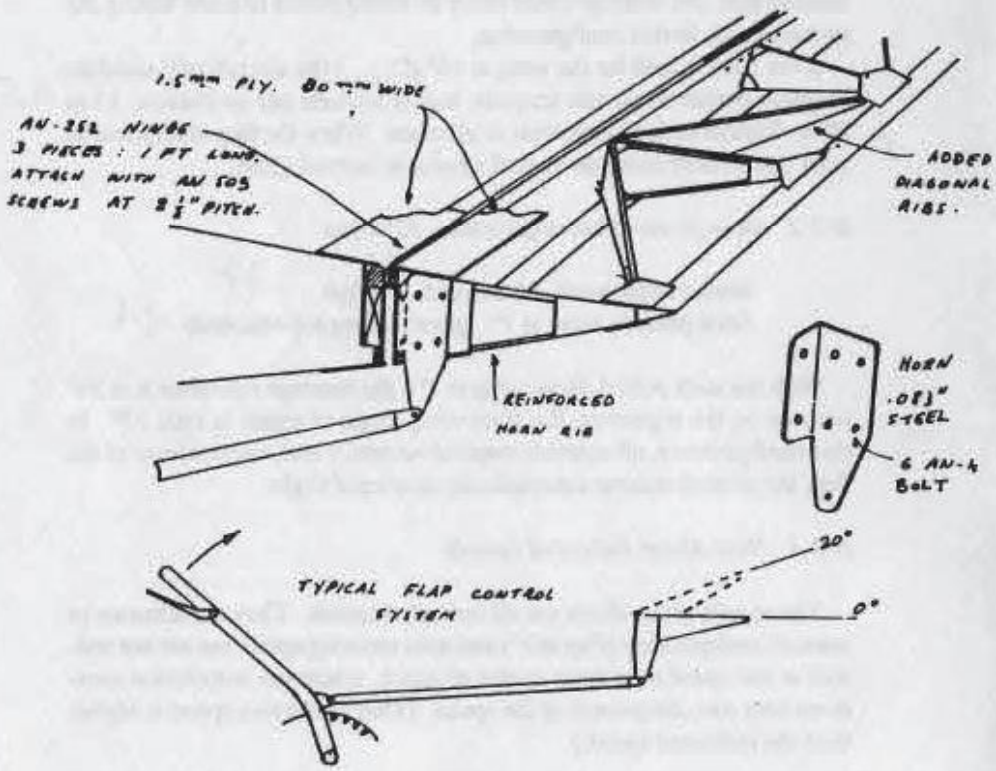

FLAP SPAR: For HM-290, -293, -360:
Upper Cap Strip: 25 x 10 mm
Lower Cap Strip: 10 x 10 mm
Webs: 1.5mm mahogany ply
FLAP SPAN: Same as wing center section

Fig. B-1 Rear Wing Trailing Edge Flap

APPENDIX C

SUBSTITUTE OF BIRCH PLYWOOD WHEN MAHOGANY PLYWOOD IS NOT AVAILABLE

Amateurs in North America often find it difficult to obtain "Okoume" or mahogany plywood and are thus obliged to use the more commonly available birch plywood. Since all Flying Flea drawings call for Okoume plywood, substitution of birch will add strength to the structure but will also result in a considerable increase in weight. The substitution can be made on the following basis.

For all plywood, working either in tension, compression, or shear:

Birch thk = 0.56 Okoume thk.

The nearest standard birch thickness above this thickness will be used. For example: 3mm Okoume plywood corresponds to 0.56 x 3 = 1.68 mm. Hence, 2mm birch plywood should be used.

Optionally, plywood thickness around the cockpit can be kept the same for better pilot protection, but at a sacrifice in weight.

APPENDIX D

LOCATION OF CENTER OF GRAVITY FROM SCALE READINGS

In order to comply with the licensing agency regulation, the aircraft must be weighed on scales in the same manner as any conventional aircraft. It is convenient to be able to calculate rapidly the position of the C.G. in per cent of the wing chord when the loads at the wheels and tail skid are known. This can be obtained by using the following equation:

$$C.G.\% = 100 \times \frac{W_{TF} \times D + W_{TA} \times (L + D)}{W \times C}$$

where W_T is the sum of the front wheels loads.

The other dimensions are given by figure D-1.

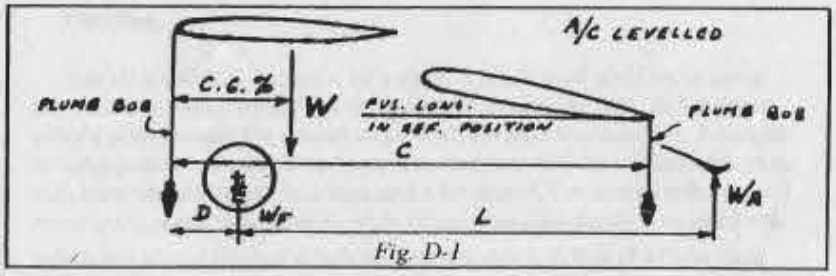

Fig. D-1

Weighing must be carried out first with the aircraft empty (no oil or fuel) then with the aircraft at take-off weight without pilot (but with oil and fuel). The pilot weight can conveniently be added in the following manner. The aircraft being levelled, the pilot seats in the cockpit and drops a plumb bob over the side of the cockpit in such a manner that it is in line with his belt buckle, as shown in figure D-2. A helper will read distance P from the tailskid to the plumb bob. Then, the front wheel load is:

$W_{F\,Pilot} = W_{Pilot} \times \frac{P}{L}$ and the tailskid load $W_{A\,Pilot} = W_{Pilot} - W_{F\,Pilot}$.

These two loads are added to the empty aircraft weights measured by the scales so that the total wheel loads are:

$$W_{TF} = W_F + W_{F\,Pilot} \quad \& \quad W_{TA} = W_A + W_{A\,Pilot}$$

Thus, by using the equation for C.G.%, and various pilot weights, the variation of C.G. with pilot weight can be estimated rapidly. The position of the front wing will be adjusted in order to have a C.G. at 25% with the heaviest pilot.

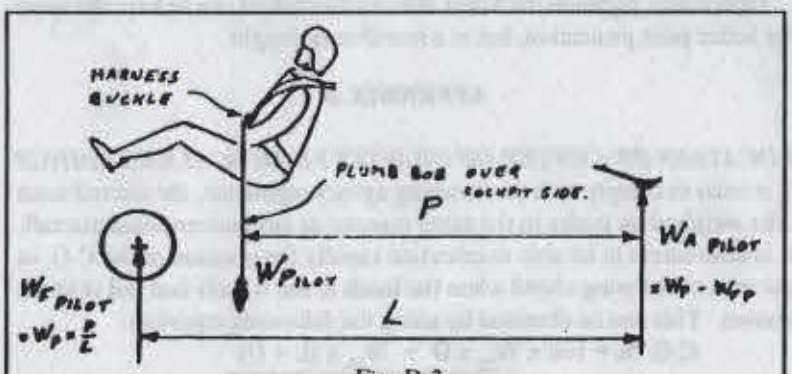

Fig. D-2

FLYING THE HM-380

Translated by Georges Jacquemin

Mr. Frank, from Lyon, France, is the builder and happy owner of a Mignet HM-380 two-seat Flying Flea. The aircraft is powered by a 65 hp Continental engine and at the time of writing had over 130 hours flying time. Here are some excerpts from Mr. Frank's letter, dated October 11, 1965, relating his experience with his aircraft.

"It is unfortunate that, due to lack of time, I have not been able to make a systematic study of the performance of my aircraft. I fly only one or two hours each week-end and, once airborne, I think only of enjoying the flight, forgetting about more serious matters. In this manner I have accumulated 130 hours. I can say, however, that at 2100 rpm with an EVRA propeller, the speed is somewhat over 84 mph (TAS). The maximum engine RPM is just over 2200 with this propeller and I usually operate at 2050 rpm and a cruising speed of approximately 80 mph (TAS). The landing gear has no fairing and this makes me lose 4 to 5 mph. these speeds have been checked from another aircraft.

"The empty weight of the aircraft is 700 lb. The fuel capacity is 13 USG. The all-up-weight, with pilot and passenger, is approximately 1,050 lb. I have no accurate record of rate of climb. I may say that it seems to vary with the weather because my adjustments are not perfect for the airframe or for the engine. The aircraft has been built in conformity with Mignet's plans, except for raising the front wing by 80 to 100 mm. Here are some details.

Take-off

"Stick full forward and engine at maximum power. Due to the propeller blast, the stick pushes hard at low speed. When take-off speed approaches, I let the stick back and the aircraft rises. From now on the stick can be pulled back to any position one desires. The rate of climb is, of course, maximum at a particular position of the stick. It is possible to take off with the stick fully aft. The lateral control is sloppy and disagreeable, but there is no danger in the maneuver. In a normal take-off, the aircraft is very sensitive in roll.

Landing

"Landing with this aircraft is very easy. It lands itself and I must admit that I have to watch myself, otherwise I tend to land too fast. At full gross weight and no wind, the aircraft stops 230 feet after touch-down. A tricycle landing gear would almost certainly reduce this to 170 feet. Without brakes, with front wheels on ball bearings and a flat airport, the aircraft rolls easily. I must touch down at around 32 mph (when I pay attention!). The ease with which the aircraft lands is simply not comparable with that of a Piper Cub

because the HM-380 is extremely stable on the approach path and the ground effect flares it automatically unless you block the stick with your hand.

"I will add that light crosswind landing on turf is absolutely no problem. If the crosswind is strong, let the aircraft approach in crab fashion, a small turn just before touch-down to face the wind and land. Once on the ground, the aircraft can be brought back along the runway axis but usually, if one is careful to land on the leeward side of the runway, the aircraft stops before crossing its width.

"The aircraft is very sensitive to ground effect during landing. It literally stops you if your rate of sink is too high. It seems that the ground effect is much less during take-off, probably due to slipstream effect.

Climbing Turn

"The rate of climb does not seem to be affected by turns at least up to about 30° bank angle.

Taxiing

"Very easy at all speeds. Not the least tendency to ground loop. The landing gear is very short and has a large track. The tail wheel is controlled from the rudder. Only one criticism: Due to the short fuselage, the nose is very high during taxi and the forward visibility is very poor. A tricycle landing gear would cure this problem and make handling of the aircraft as safe as that of an automobile. I am 100% for it.

Stall

"Power off, my HM-380 has a gentle stall, losing only a few feet. Power on, the aircraft will not stall. It will climb steadily with engine at 2050 rpm, showing a rate of climb of 100 to 200 fpm.

A Few Final Remarks

"For the conventional pilot, the Flying Flea may appear at first to be uncontrollable. The only reason is that its controls are very sensitive. Since I went through this period of adaption I can speak with some authority. One must contain oneself to move very little as it is easy to over-control the aircraft. The solution may be in using a non-linear control system which would allow relatively large displacements of the stick for small motion of the control surfaces, but still maintain full displacement of the control surfaces for full displacement of the stick. However, once the pilot is adapted to it, the

present control system is perfectly adequate.

Henry Frank."

FLYING FLEA WEIGHT BALANCE

Front Wing: 20 ft × 4 ft. = 80 sq. ft.
Rear Wing: 14 ft × 4 ft = 56 sq. ft.
Estimated Gross Weight: 500 lbs.
Wing Loading Ratio Front to Rear: 1.8 ± .03
Rear Wing Loading: $\frac{500\#}{(80\times1.8)+56}$ = 2.5#/sq ft. 2.5 × 56 = 140#
Front Wing Loading: 2.5 × 1.8 = 4.5#/sq ft. 4.5 × 80 = 360#
Center of Lift assumed to be @ 25% of chord. (12" aft of L.E)

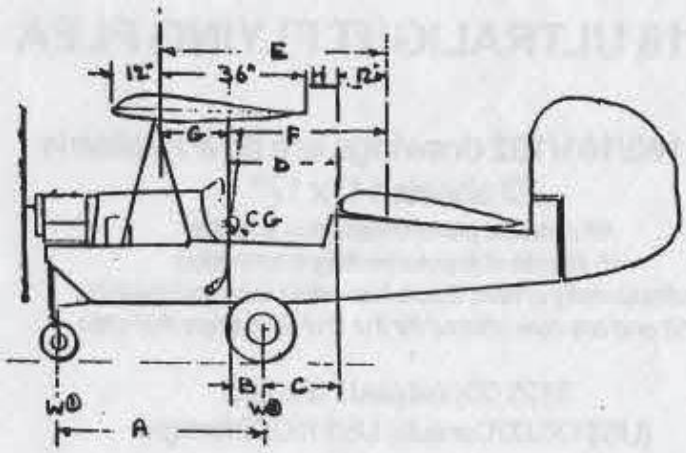

$B = \frac{A \times Weight①}{Weight① + Weight②}$ $D = B + C$

$F = D + 12" = E + 500 \times 360 = E \times .72$

$G = E + 500 \times 140 = E \times .28$

$E = F \div .72$

$H = E - 36" - 12" \pm \frac{1/4"}{3/16"}$

Note: Moving the front wing will affect the C.G. Re-check it.

The Weight & Balance procedures used by Pierre Mignet, Georges Briffaud, and Yves Milliran

Henri Mignet's *Pou du Ciel*, or "Flying Flea", was a unique contribution to the world of aviation. The original HM-14 was designed to be extremely simple to build and to fly. It gave the homebuilt airplane movement a tremendous boost in the 1930s that is still felt today.

In 1958 Georges Jacquemin, a Frenchman living in Canada, translated into English Mignet's plans for the HM-290. He also compiled a manual for its construction, including details of weight and balance. Jacquemin was an accomplished aeronautical engineer and this present work, *FLYING FLEAS – TECHNICAL NOTES FOR THE AMATEUR*, is recommended reading for all Flying Flea builders and all followers of Mignet-based designs.