AUSTFLIGHT AVIATION PTY LTD

OPERATORS MANUAL

AUSTRALIAN DRIFTER

A-503

SERIAL NUMBER:

AUSTFLIGHT AVIATION PTY LTD

OWNERS MANUAL

AUSTRALIAN DRIFTER

A-503

This manual is issued under the authority of the Chief Flying Instructor of Austflight Aviation.

Written and compiled by David P.Eyre

CONTENTS

PART I GENERAL

INDEX

PART I GENERAL

1.0 Important notices

Warning

This manual was issued to the original purchaser of the aircraft.

It contains information current at the time of issuance only.

Operators of this aircraft are warned that due to possible modifications and changes in techniques and procedures, the information contained in this manual only applies at the time the aircraft was purchased.

Disclaimer

Modification of any component part of the Drifter, or failure to strictly follow the procedures set out in this manual, can result in structural failure, engine failure, injury to the pilot, other persons on board or persons on the ground.

Austflight assumes no responsibility for any property damage or personal injury occasioned by unauthorised modification, improper assembly or the use of procedures not contained in this manual.

PART 1 GENERAL

1.1 Three view

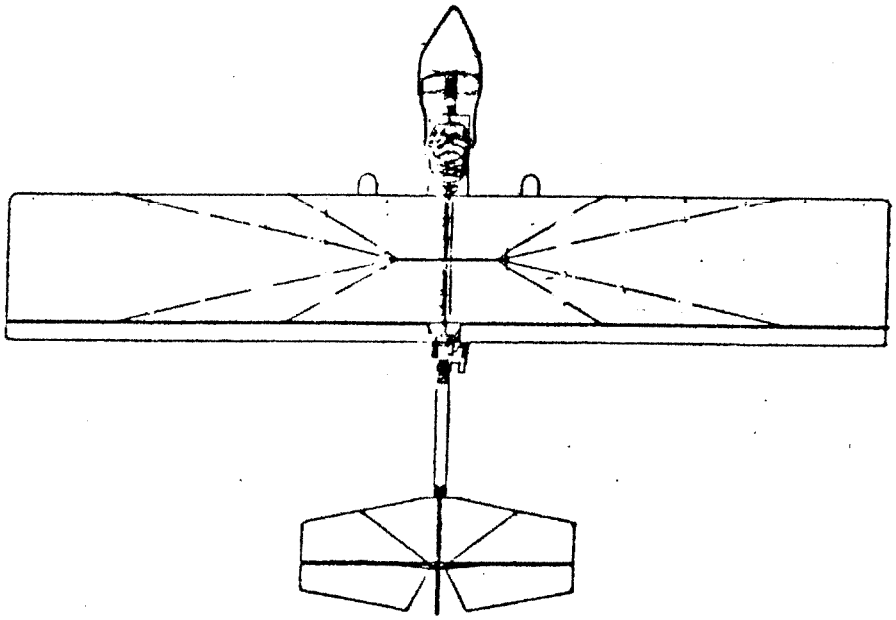

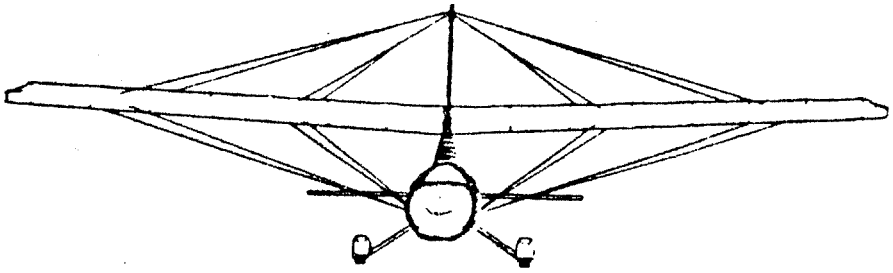

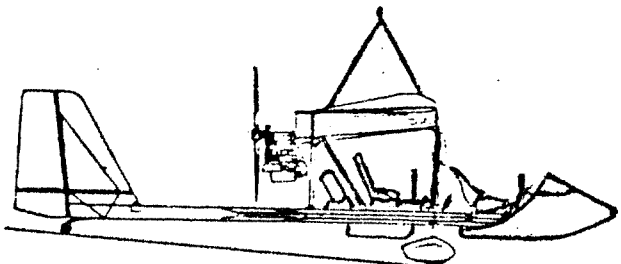

PART I GENERAL

1.2 Specifications

Height	2768 mm
Length	5791 mm
Wing span	9144 mm
Wing loading (empty weight)	14.60 kg/m^2
Wing loading (gross weight)	28.70 kg/m^2
Fuel capacity (with filler neck modification)	32.00 litres usable
	2.00 litres unusable
	30.00 litres total
Empty weight	203.9 kg
Gross weight	400.0 kg
Useful load	196.1 kg
Structure limit loads	+ 4.06 g
	- 3.00 g
ultimate	6.06 g

1.3 Performance

Range *	65% power (5100 rpm)	225 nm approx, nil wind.
Endurance *	65% power (5100 rpm)	180 minutes approx.

* no reserve

Fuel flow	65% power (5100 rpm)	10 lph
	75% power (5500 rpm)	13 lph
	Max.power (6250 rpm)	17 lph

Take-off distance at MTOW to 15m climb height 213 m under standard sea level condition

Landing distance at MTOW from 15m height 265 m under standard sea level conditions..no brakes.

Rate of climb at sea level under ISA conditions 500 fpm

Glide ratio at MTOW ..... 8 : 1

1.4 Engine

Rotax 503 two stroke, air cooled, two cylinder, single ignition, dispacement of 496.7 cc developing 46 hp at 6250 rpm.

1.5 Reduction units

i. Maxair 4 V belt unit 2.58 : 1

ii. Rotax gear box 2.38 : 1

NOTE : When viewed from the rear, the propeller rotates LEFT with the belt reduction unit.

When viewed from the rear, the propeller rotates RIGHT with the gear reduction unit.

PART I GENERAL

1.6 Propeller

Standard 2 blade timber 152 mm diameter 76 mm pitch

Optional 3 blade fibre 150 mm diameter, ground adjustable pitch
pitch blocks... 14°

1.7 Fuel

Capacity - standard tank..... 30 litres usable 32 litres total.

Fuel mix - 50 : 1 motor petrol(minimum grade 89 octane):two stroke oil.

Recommendation - unleaded fuel and Valvoline two stroke oil.

1.8 Placards

In view of both seats.

LOADING LIMITATIONS

MAXIMUM TAKE OFF WEIGHT		400 KG
MINIMUM PILOT WEIGHT	FRONT SEAT	69 KG
	REAR SEAT NOT APPLICABLE	
MAXIMUM PILOT WEIGHT	FRONT SEAT	92 KG

NOTE : NOSE BALLAST MUST BE ADDED TO BRING FRONT SEAT WEIGHT TO 69 KG WHETHER FLOWN DUAL OR SOLO

AUSTFLIGHT AVIATION

In view of both seats.

SINGLE PERSON OPERATION

THIS AIRCRAFT MUST BE FLOWN FROM FRONT SEAT WHEN ONLY ONE PERSON ON BOARD

AUSTFLIGHT AVIATION

Adjacent to airspeed indicator.

AIRSPEED LIMITATIONS

V_{NE} NEVER EXCEED SPEED.....80 KNOTS IAS

V_A MANOEUVRING .....60 KNOTS IAS

TURBULENCE PENETRATION (MAX.) 48 KNOTS IAS

AUSTFLIGHT AVIATION

PART I GENERAL

1.8 Placards (continued)

Near fuel tank filler

THIS ENGINE REQUIRES A FUEL : OIL MIX OF

50 PARTS UNLEADED FUEL TO
1 PART TWO STROKE OIL

AUSTFLIGHT AVIATION

In view of both seats.

MANOEUVRES

NORMAL MANOEUVRES ONLY PERMITTED INCLUDING STALLS
AND STEEP TURNS TO 60° BANK ANGLES.

AEROBATIC MANOEUVRES, INCLUDING SPINS, ARE NOT PERMITTED

AUSTFLIGHT AVIATION

In view of front seat.

THIS AIRCRAFT MUST NOT BE FLOWN EXCEPT IN
ACCORDANCE WITH THE REQUIREMENTS OF ANO 95:25

AUSTFLIGHT AVIATION

In view of both seats.

NO SMOKING

In view of both seats.

AVOID CONTINUOUS OPERATION BETWEEN 5800 RPM AND 6400 RPM

In view of both seats.

SPIN RECOVERY

OPPOSITE RUDDER FOLLOWED BY
FORWARD STICK. WHEN ROTATION
STOPPED CENTRALISE RUDDER
AND EASE OUT OF DIVE.

INTENTIONAL SPINS PROHIBITED

PART 2 LIMITATIONS

INDEX

PART II LIMITATIONS

2.0 Introduction

This section contains information relating to the limitations of the Drifter.

The aircraft is not to be flown or operated in such a manner that these limitations are exceeded.

2.1 Airspeeds

The airspeeds quoted are based on using a properly calibrated airspeed indicator. Due allowance is to be made when not using a calibrated airspeed indicator or when the pitot source is unreliable.

V_{ne}	- Never exceed speed	80 knots IAS
V_a	- Manoeuvring speed	60 knots IAS
	- Turbulence penetration speed	48 knots IAS
V_{no}	- Maximum designed cruise speed	75 knots IAS
V_c	- Cruise speed (65% power..5100 rpm)	48 knots IAS
V_s	- Stall speed at MTOW	35 knots IAS
TOS	- Take off safety speed	49 knots IAS
V_x	- Best angle of climb speed	43 knots IAS
V_y	- Best rate of climb speed	44 knots IAS
APPROACH SPEED		49 - 50 knots IAS
BEST GLIDE SPEED		43 knots IAS
DEMONSTRATED CROSSWIND COMPONENT		15 knots IAS

2.2 Weights (refer also to section 6.1)

Maximum take off weight	400 kg
Minimum pilot weight - front seat	69 kg
Maximum pilot weight - front seat	92 kg

NOTE : Nose ballast must be added where front seat pilot weight is less than 69 kg whether flown dual or solo

2.3 Centre of gravity

Forward limit.....406 mm aft of datum (26% MAC)
Rear lmit.....533 mm aft of datum (55% MAC)

NOTE 1. Datum is the front of the leading edge tube immediately adjacent to down tube bracket, with aircraft fuselage level.

2.4 Single person operation

The aircraft MUST be flown from the front seat when one person only is on board.

PART II LIMITATIONS

2.5 Manoeuvres

Normal manoeuvres only are permitted, including stalls and steep turns to 60° bank angles.
AEROBATIC MANOEUVRES, INCLUDING SPINS, ARE NOT PERMITTED

PART III EMERGENCY PROCEDURES

INDEX

PART III EMERGENCY PROCEDURES

3.1 Airspeeds for emergency operation

: Engine failure after take off minimum.....49 knots IAS

: Engine failure during flight.....49 knots IAS
: Engine fire during flight.....80 knots IAS
: Manoeuvring speed V_a .....60 knots IAS
: Turbulence penetration speed.....48 knots

3.2 Engine failure

: During take off run.
- close throttle. This prevents intermittent power surges with resultant yawing and swinging.

  Note : If engine is intermittent or showing any sign of malfunction, the takeoff should be aborted. DONT EVER expect the engine to clear itself when airborne. The correct procedure is to return to the tarmac and investigate the problem.
- keep straight with rudder/tailwheel steering.
- the brakes should be used to bring the aircraft to a full stop.
- turn off ignition switch
- investigate the problem before making any further attempt to take off.

: After take off.
- below 300 feet.
  . nose down immediately to maintain 49 knots IAS
  . choose a landing area within an arc of approximately 30° either side of heading, preferably into wind.
  . close throttle.
  . ignition off. electrics off.
  . land.

NEVER ATTEMPT TO TURN BACK TO AIRFIELD

: During flight.
- nose down to maintain 49 knots IAS
- turn towards a suitable area for a landing into wind.
- trouble check.
  . ignition on.
  . choke off.
  . throttle set.
- attempt engine restart.
- seat belts tight.
- land.

3.3 Partial engine failure in flight

: When an engine is not operating normally, it may fail without further warning.
- if suitable area, close throttle and land.. Do not make a powered approach in case the engine should fail during the approach.
- if no suitable area, attempt climb to a safe height and proceed to an area where a landing can be reasonably assured, close throttle

PART III EMERGENCY PROCEDURES

3.4 Forced landing

: Flights should always be made over terrain that offers suitable areas where emergency landings may be made. It is most unwise to plan a flight over 'tiger' country.

: Choose
- fields with longest run into wind.
- beaches...beware of people already on the beach.
- shallow water.
- roads.

NOTE : Be aware of power lines, telephone lines, ditches, fences and other obstructions when choosing an area to land.

3.5 Engine fire

: During start up.
- ignition off
- vacate aircraft and push it to uncongested area
- operate fire extinguisher

: During flight.
- ignition off
- descend at 80 knots
- land

NOTE : Do not attempt engine restart as an explosion may result.

3.6 Turbulence

: Prudent flight planning should ensure that turbulent conditions are not encountered.

: If inadvertent flight into turbulence is made -
- reduce speed to 48 knots
- make cautious 180° turn to evade turbulent area
- minimise control inputs...use only sufficient control to keep the aircraft straight and level

: The aircraft is designed to withstand high gust loads of 50 fps when maintaining 48 knots. This fact should not encourage the pilot to deliberately fly in excessive turbulence.

3.7 Reduced visibility

: Proper assessment of weather conditions, prudent flight planning and a commonsense outlook, should ensure that flight is never made in, nor continued towards weather that may result in reduced visibility.

: If cloud is inadvertently entered, set up a gentle 180° turn to immediately leave the cloud.

: If necessary, make a precautionary landing and wait for conditions to improve.

PART III EMERGENCY PROCEDURES

3.8 Inadvertent spinning.

: Spinning is prohibited under the Air Navigational Orders.

: Inadvertent spinning may occur under certain circumstances.

: Spin recovery technique is as follows :-

Apply full opposite rudder
Move the control column forward to break the stall.
Hold these control inputs until the rotation stops.
Centralise the rudder and ease out of the resulting dive

NOTE:- Care should be taken not to overcontrol when moving the control column forward. Also care should be taken not to hold opposite rudder input after the rotation stops otherwise the aircraft may spin in the opposite direction.

PART IV NORMAL PROCEDURES

INDEX

PART IV NORMAL PROCEDURES

4.0 Introduction

This section outlines the normal operating procedures and sets out the correct techniques to ensure that the aircraft is operated within design limitations. Adherence to these procedures and techniques is essential.

Austflight cautions that short cuts and the use of unauthorised procedures, could cause problems which could lead to damage to the aircraft, property, limb or life.

4.1 Speeds for normal operations

Taxying		slow. See section 4.5.
Take off safety speed at MTOW		49 knots IAS
Climb	V_x Best angle of climb.	43 knots IAS
	V_y Best rate of climb..	44 knots IAS
	Normal	43 - 50 knots IAS
Cruise 65% power		48 knots IAS
Approach		48 - 50 knots IAS
Best gliding speed		43 knots IAS
Manoeuvring V_a		60 knots IAS

4.2 Preflight preparation

Before any flight, consideration should be given to the following -

: Fitness - well rested
- no disease or sickness
- properly nourished - food and liquid
- not on medication
- no residual effects of medication
- no residual effects of alcohol - at least 8 hours since last alcoholic drink

: Clothing -
- adequate warm clothing or flying suit
- gloves
- suitable shoes, boots..no thongs or sandals
- protective helmet with effective chin strap..
- goggles or visor on helmet
- no loose items which could come out of clothing and strike the propeller

: Weather assessment -
- wind effect..turbulence..crosswind..drift effect
- visibility
- future trends

: Flight planning -
- terrain
- fuel flow and endurance
- refuelling points organised

assessment of controlled airspace, restricted areas and built up areas.
- copy of route and intentions given to responsible person/
- owners approval gained for landing areas to be used.

: Weight and balance checked within limits

: Documentation -
- Pilot Certificate current

PART IV NORMAL PROCEDURES

4.3 Preflight inspection

: In carrying out this inspection, pay particular attention to bent or cracked tubes, rods and bolts.
Check for elongation of holes in tangs.
Check wire ends for frayed or cut wires and the condition of the crimp. Frayed or damaged wires must be replaced before further flight.

1. Cockpit areas
   : ignition switch off
   : instruments checked and set
   : pitot cover removed - pitot clear
   : controls - full, free, correct sense of movement
   - attach points for security and condition
   : seat belts for condition - attach points for security
   - release catch function
   NOTE : IF FLYING SOLO, ENSURE REAR SEAT BELT SECURED
   : seat for security and condition - attach points secure
   : check ballast removed or installed as required
2. Undercarriage
   : legs not bent - attach brackets checked for cracks/security
   : axle bolts firm
   : brakes - condition and security
   : tyres - wear and inflation
3. Wings
   : flying wires for condition and security
   : leading edge straight
   : wing shape normal
   : fabric condition
   : tie downs removed
4. Ailerons
   : clevis pins and rings checked

PART IV NORMAL PROCEDURES

4.3 Preflight inspection (continued)

4. Ailerons (continued)
   : 'Velcro' fastened correctly
   : control rods checked

5. Fuel
   : sufficient
   : sump drained and contents checked
   : tank checked for leaks and condition of attach straps and brackets
   : squeeze primer bulb to eliminate air from fuel lines

6. Engine
   : throttle and choke cable for condition, security and seating correctly
   : carburettor alignment- clamps firm
   : wiring and coils for security
   : spark plug leads correctly connected and secure
   : engine mount tube and engine mounts for condition and security
   : exhaust system for security, lock wire in place, cracks in muffler or pipe
   : starter for security - cable for freedom of movement
   : reduction belts for tension and condition
   : gear drive for looseness

7. Propeller
   : nicks, cracks and splits
   : security - lock wire in place

   NOTE Check bolts have not loosened due to shrinkage after dry weather.

8. Empennage
   : fin and rudder for security and condition
   : tailplane and elevator for security and condition
   : control checked
   : wires checked
   : clevis pins and rings checked
   : tailwheel for security and condition
   : tailwheel attach point to fuselage checked for security
   : tie downs removed

9. As for 6

10. As for 4

11. As for 3

12. As for 2

13. Kingpost - wires for tension, clevis pins and rings checked

14. Nose cone for security, windscreen secure and clean

15. Pilots - no loose articles of clothing or items in pockets which could come away and damage propeller. Be aware of coins, pens, scarves, sunglasses

PART IV NORMAL PROCEDURES

4.4 Engine starting procedure

: suitable position - clear behind for slipstream blast
- clear in front for clear path for taxying
: wheel chocks in position
: rear seat belts fastened
: primer bulb squeezed
: front seat belts as required
: choke full on
: ignition switch on
: throttle closed
: clear propeller - visually check clear
- call out loudly 'all clear'
- wait for any response
: operate starter
: when engine fires - close choke - set throttle
: chocks removed
: seat belts fastened firmly

4.5 Taxying

: safe path - don't cut corners
: maintain rpm as high as possible consistent with safe taxy speed
: turns preferably into wind

4.6 Pretake off checks

: Fuel on and sufficient for planned flight : Fuel cap on
: Instruments checked and set
: Harness firm , both seats
: Controls , full, free and correct movement
: Engine running smoothly
: Ballast removed or installed as required

4.7 Take off

Normal : check airstrip and approaches clear
: line up into wind
: advance throttle
- listen for normal functioning of engine, if any hesitation, roughness, backfiring or lack of acceleration, close throttle and investigate problem.

NOTE : DO NOT TAKE OFF WITH A SUSPECT ENGINE

: keep straight with rudder
: as speed permits, ease forward a little on the control column and raise tail..be aware of increased swing tendency
: take off is achieved with the aircraft in a slight tail down attitude
: when speed is at Take Off Safety speed (49 knots), the aircraft should be lifting off. If not, apply gentle back pressure to control column until aircraft breaks ground
: as aircraft leaves ground effect (up to 30 feet) don't allow nose to pitch up.
: maintain an attitude for an initial climb of 49 - 50 knots

PART IV NORMAL PROCEDURES

4.7 Take off (continued)

Crosswind : as for normal take off except -
: use sufficient aileron control to keep wings level during speed build up
: when airborne, and well clear of the ground, turn into wind and lay off drift
: maximum crosswind component 15 knots

Aborted take off
: if this becomes necessary, make a clear cut decision and stick to it
: close throttle
: keep straight with positive rudder inputs
: use brakes to bring aircraft to a stop

NOTE : VARIATION TO POWER SETTINGS WILL CAUSE REVERSAL OF SWING DIRECTION

4.8 Climb
: power setting for 75 % power....5500 rpm
: normal climb.....49 - 50 knots IAS
: V_x best angle of climb speed... 43 knots IAS
: V_y best rate of climb speed.... 44 knots IAS

4.9 Cruise
: normal - power setting 65% - 5100 rpm
NOTE : AVOID CONTINUOUS OPERATION BETWEEN 5800 RPM & 6400 RPM

4.10 Stalling
: entry - slow deceleration
: power on stalls produce a mild nose down pitch with little or no tendency to drop a wing.
: ailerons are effective right through the stall and recovery
: power off stalls produce a more pronounced nose down pitch, otherwise the stall characteristics remain the same

4.11 Descent
: glide at 50 knots, engine idling, gives a glide ratio of 8 : 1
NOTE : The engine should be warmed and cleared every 200 ft. of descent and before commencing approach
: normal descent and approach...49 - 50 knots IAS
: never descend below TOS of 49 knots IAS in a glide.

4.12 Baulked approach
: apply full power smoothly - if throttle advanced too rapidly, the engine may flood and stall
: arrest sink rate by initially placing aircraft in a normal climbing attitude
: prevent yaw (keep straight) with rudder
: climb out not below 49 knots IAS

PART IV NORMAL PROCEDURES

4.13 Landing

: Normal
- approach speed 49 - 50 knots IAS
- as aircraft is flared, ensure throttle is closed
- aim for a three point landing
- after touchdown, keep straight with rudder
- control column held back
- apply brakes as required
- do not release back pressure on control column until at taxying speed

: Wheel landing
- approach speed 49 - 50 knots IAS
- as aircraft is flared, ensure throttle is closed
- aim to touch down in level attitude
- after touchdown, apply gentle forward pressure on control column
- keep straight with rudder
- allow tail to gently drop as speed decreases

: Crosswind landing
- approach in crabbed attitude. That is, wings level with ailerons, rudder central (no yaw) and laying off drift
- speed 49 knots
- as aircraft is flared, yaw nose straight with rudder and at the same time apply sufficient aileron control to prevent the wing from rising. It is better to apply too much aileron rather than too little as this will result in the aircraft slipping into the crosswind rather than drifting across the available strip width
- hold this attitude until the wheels touch
- use rudder to keep straight
- use sufficient aileron to keep wings level
- maximum crosswind 15 knots

: Touch and go landings
- due to variation in swinging direction tendency with power changes, touch and go landings are not recommended

4.14 After landing and close down

: taxy to parking position
: throttle closed
: ignition switch off
: if engine continues to run, turn off fuel supply

4.15 Securing aircraft

: even if only a short time is anticipated between flights, the aircraft should be hangared for protection from the sun
: if hangar not available, use tie down ropes to secure the wings and tail. A sudden and unexpected gust of wind can cause expensive damage
: remove ignition key and give consideration to removing an essential engine part to prevent unauthorised starting

PART IV NORMAL OPERATING PROCEDURES

4.16 Post flight actions

: notify person holding flight details that you have arrived
: sign off Flight Record Sheet
: note any known defects and arrange for rectification
: complete details of flight in logbooks

PART V ENVIRONMENTAL ASPECTS

INDEX

PART V ENVIRONMENTAL ASPECTS

5.0 Introduction

: For various reasons, mostly without foundation, ultralight aircraft are perceived by the public as being noisy, unsafe flying machines flown by untrained 'Hells Angels' of the air.

One way that we, as pilots, can help to overcome this prejudiced view is to show our concern for others and the environment in which we are operating.

: Allow it to become widely known that the ultralight movement is responsible and aware of enviromental issues. A few irrational conservationists in the community consider that any noise is harmful if it can be heard. Try to take a calm and reasoned approach if you have to deal with these people.

5.1 Noise abatement

: Use the standards specified in the regulations as the minimum for your operations. The attitude of ' Its OK because I'm legal' does not win any friends if your operations are noisy or frightening to them.

: Avoid high power settings and extreme manoeuvres when operating over property which is close to buildings or gatherings of people.

: Consider the use of voluntary curfew times if operating close to noise sensitive areas, such as hospitals, motels etc.

: Consider various circuit patterns to minimise flying close to noise sensitive areas.

: Use low power settings so as not to disturb cattle, sheep and other stock.

5.2 Use of landing areas

: Always obtain the permission of the owner before landing away from your regular field.

: If a public authority owns the land, ensure that your operations are permitted under the local laws and by-laws.

: If operations are permitted, ensure that they are conducted in such a way as not to be seen to be hazardous or endangering to the public.

: Exercise restraint at all times. Don't be tempted to low fly or land at a field or on a beach simply because it is there. Check with the owner first.

: If an emergency landing has been made, make every effort to aquaint the owner with the details. An assurance should be given to the owner that the occurence was a rare event.

PART 6 LOADING WEIGHT AND BALANCE

INDEX

PART 6 LOADING WEIGHT AND BALANCE

6.0 Introduction

: The data shown in this section applies specifically to the aircraft serial number.....
: Any alteration to the position or weight of any component will result in a change to the position of the centre of gravity.
: Be particularly aware of -
- removal of components and replacement with components of a different weight.
- changing the position of a component from its design position.

: Any alteration to the angle of incidence of the wing or tailplane will result in changes to the controllablity of the aircraft in the pitching plane and its ability to control minor shifts in the centre of gravity.
: Austflight Aviation does not authorise any of the above listed changes and will not accept any resposibility for accidents or incidents arising from such changes.

6.1 Loading limitations

i. Weight
: maximum take off weight ..... 400 kg
: minimum pilot weight - front seat ..... 69 kg
- rear seat ..... not applicable
: maximum pilot weight - front seat ..... 92 kg

NOTE : Nose ballast must be added where front seat pilot weight is less than 69 kg whether flying dual or solo.

ii.Centre of Gravity Limits.
: forward limit ..... 406 mm aft of datum
: rear limit ..... 533 mm aft of datum

6. Weighing procedure

: remove all extraneous equipment.
- only that equipment which is normally attached, should remain on the aircraft.

: drain fuel until only unusable fuel remains ... 2 litres.
: in a hangar or sheltered position -
- place scales under each main wheel and the tailwheel.
- add these weights together to obtain empty weight.

alternatively,
- place one set of scales under each wheel in turn and add the three weights together to obtain an approximate empty weight.

: Weight specific aircraft -

Drifter A 503 serial number.....weighs ..... kg

.3 Determination of Centre of gravity position.

. Bring aircraft to one of the following configurations,

a. empty aircraft, plus 69 kg in front seat, plus unusable fuel .... 2 litres.

b. empty aircraft, plus 69 kg in front seat, plus full fuel .... 32 litres.

c. empty aircraft, plus actual pilot weight in front seat, plus unusable fuel .... 2 litres.

d. empty aircraft, plus actual pilot weight in front seat, plus full fuel .... 25 litres.

e. either of c. or d. above.

i. Elevate tail until fuselage tube is level

ii. Drop a plumb bob from the wing leading edge tube, (datum A) to pan and permenently mark datum B.

iv. Suspend aircraft as shown in the diagram, with horizontal stabliser level.

v. Measure distance from datum B to a point immediately above fulcrum.

vi. This point must lie within 406 mm and 533 mm aft of datum B in any configuration.

vii. Record actual data on the appropriate section of the weight and balance chart in section 6.4.

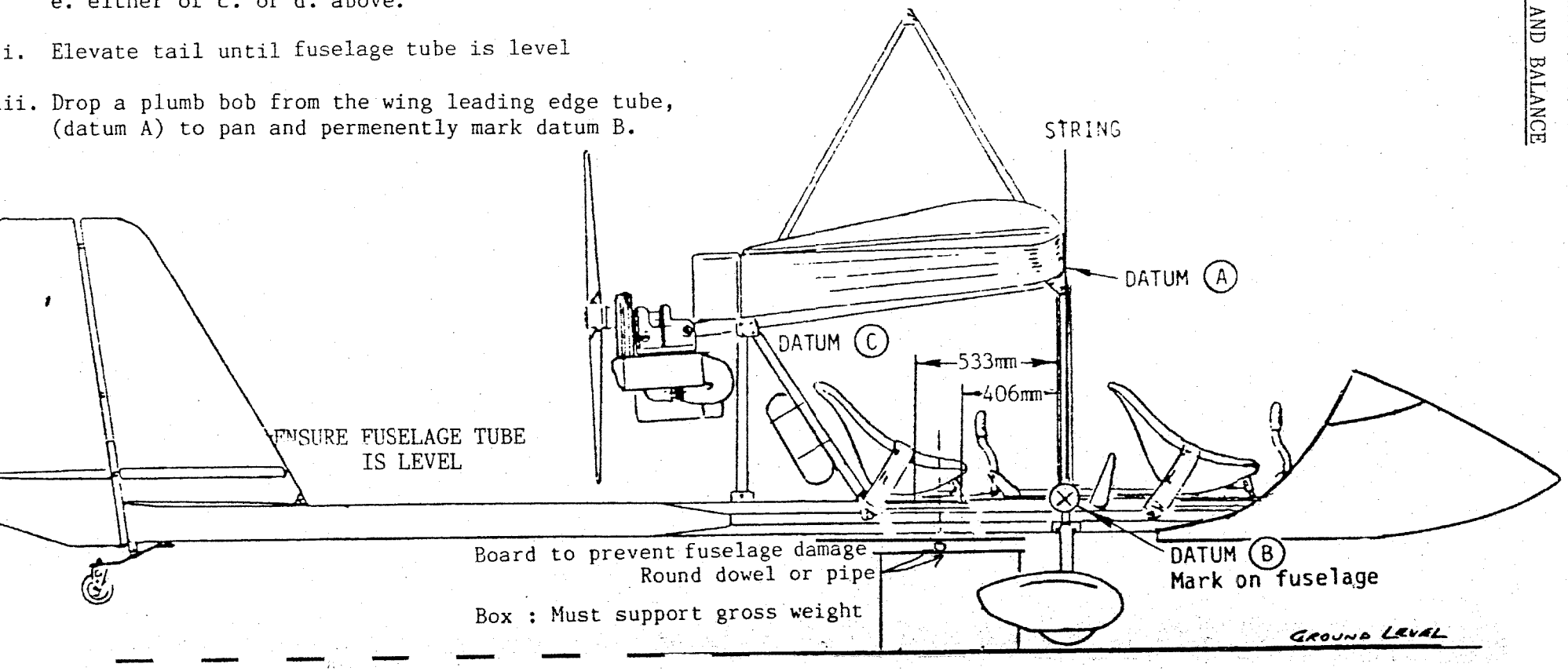

PART 6 LOADING WEIGHT AND BALANCE

6.4 Weight and balance for specific Drifter serial number.....

: Configuration i.
- front seat pilot weight 69.0 kg
- unusable fuel (litres) 1.4 kg
- c of g ..... mm aft of datum

: Configuration ii.
- front seat pilot weight 69.0 kg
- full fuel (32 ltres) 23.0 kg
- c of g ..... mm aft of datum

Certified correct.....on behalf of Austflight..date.....

If the owner wishes to use the actual pilot weight and weighs the aircraft using the procedure shown on previous page, the following is to be completed.

: Configuration iii
- front seat pilot weight .... kg
- unusable fuel (2 litres) 1.4 kg
- c of g ..... mm aft of datum

: Configuration iv
- front seat pilot weight .... kg
- full fuel (32 litres) 23.0 kg
- c of g ..... mm aft of datum

Certified correct.....Owner..date.....

6.5 Centre of gravity changes : problems and solutions

If any items are removed or added, the following formula can be used to establish the new centre of gravity position

i. Weight added.

$$\frac{\text{weight added}}{\text{new total weight}} = \frac{\text{change in c.g.}}{\text{dist. between where weight added and old c.g.}}$$

ii. Weight removed.

$$\frac{\text{weight removed}}{\text{new total weight}} = \frac{\text{change in c.g.}}{\text{dist. between where weight removed and old c.g.}}$$

(see next page for examples)

PART 6 LOADING WEIGHT AND BALANCE

6.5 Centre of gravity changes ; problems and solutions (continued)

Example 1

Given: aircraft weight 216 kg
c.g. 502 mm aft of datum

Find : change in c.g. if 8 kg toolkit added at 1020 mm aft of datum

Solution:

$$\frac{8}{216 + 8} = \frac{?}{1020 - 502}$$

$$\frac{8}{224} = \frac{?}{518}$$

change in c.g. = + 18 mm (add this to 502 to obtain new c.g.)

Example 2

Given : aircraft weight 220 kg
c.g. 484 mm aft of datum

Find : change in c.g. if 6 kg instrument pack removed 116 mm forward of datum.

Solution:

$$\frac{6}{220 - 6} = \frac{?}{484 - 116}$$

$$\frac{6}{214} = \frac{?}{368}$$

change in c.g. = + 10 mm (add this to 484 to obtain new c.g.)

Note : result was added to obtain new c.g. as the weight was removed forward of the old cg which results in an aft shift of c.g.
Logically:
- weight added fwd. of old c.g. - new c.g. moves fwd.
- weight removed aft of old c.g. - new c.g. moves fwd.
- weight added aft of old c.g. - new c.g. moves aft.
- weight removed fwd of old c.g. - new c.g. moves aft.

Solution using aeronautical computor

Using example 1.

set 8 on outside scale
over 224 on inside scale

against 518 on inside scale
read 18 on outside scale

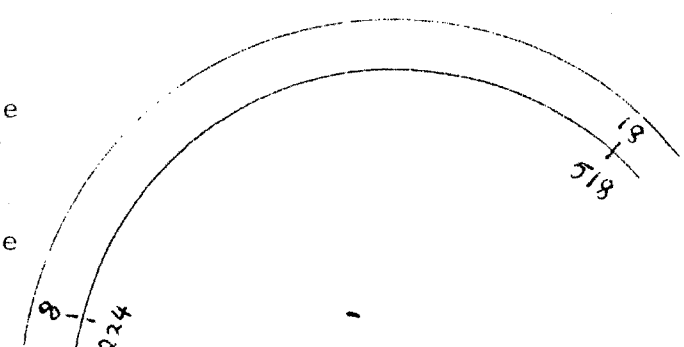

PART VII SYSTEMS DESCRIPTION

PART VII SYSTEMS DESCRIPTION

7.0 Introduction

This section outlines details and operation of the systems as originally applicable to this aircraft.

7.1 Airframe

: Fuselage..one piece, seamless, 127mm diameter 6061T6 aluminium tube with stainless steel floor pan.

: Down tubes..sleeved 381mm 6061T6

: Wing..one piece, double surface, Dacron covered, aluminium tube spars and ribs, cable braced from kingpost and fuselage.
Wing is hinged at the centre section for ease of dismantling and carriage.

: Tailplane..cruciform, double surface, dacron covered, aluminium tube frame with Divinacell ribs. Cable braced.

7.2 Flight controls

: Ailerons..operated by side movement of control column through a system of cables, bellcranks and push rods.
Full span except for centre section cutout, double surface, Dacron covered, aluminium tube frame and ribs.

: Elevator..operated by forward and backward movement of the control column through a tube push rod. Double surface, Dacron covered, aluminium tube frame and Divinacell ribs.

: Rudder..operated by left and right rudder pedals through a system of cables and bellcranks. Double surface, Dacron covered aluminium tube frame with Divinacell ribs.

7.2 Undercarriage

: Conventional undercarriage comprising two main wheels and a steerable tailwheel.

: The main wheels are attached to chromemoly steel tube legs connected through attachment brackets to the fuselage tube and floor pan.

: Tyres are 600 x 6 x 15
Tyre pressure minimum.....15 psi
maximum.....30 psi

: Tailwheel is a 120 mm solid rubber wheel attached through a swivel bearing to a tailspring connected to the rear of the fuselage tube. Cables attached to the tailwheel unit are connected to the rudder pedals to allow tailwheel steering.

PART VII SYSTEMS DESCRIPTION

7.4 Instrument panel

: The basic 'Winter' pack consists of 38mm airspeed indicator, altimeter and tacho , enclosed in a protective casing. The airspeed indicator works from a remote mounted pitot tube.

7.5 Seats

: Constructed of fibre glass with aluminium brackets attached to the fuselage pan. The seats are ground adjustable.
NOTE : If the seat position is changed, the centre of gravity position is to be recalculated to ensure that it has remained within limits...refer Section 6

7.6 Seat belts

: THE WEARING OF SEAT BELTS IS MANDATORY

: Four point seat belts are provided for each seat position

: If flying solo, the rear seat belt is to be fastened and tightened to prevent it trailing into the propeller or interfering with the controls.

: Before take off, the seat belts are to be checked for proper engagement and firm adjutment.

7.7 Engine

NOTE : For a more detailed description, refer to the Rotax Operators Manual.
: AVOID CONTINUOUS OPERATION BETWEEN 5800 RPM & 6400 RPM

: Rotax 503, two stroke, two cylinder, air cooled, single ignition, displacement of 496.7 cc developing 46 HP at 6250 rpm.

7.8 Propeller reduction units

: Standard unit.. Rotax gear reduction..2.25 ; 1 ratio.
When viewed from the rear of the aircraft, the propeller rotates clockwise to the right.

Optional unit.. Maxair belt reduction..2.25 : 1 ratio.
When viewed from the rear of the aircraft, the propeller rotates anti clockwise to the left.

7.9 Propeller (see also section 9.2)

: Standard..timber two bladed pusher. 1524 mm diameter and 815mm pitch.

: Optional..'Ultraprop' 3 blade pusher 1498 mm fitted with 14° pitch blocks.

PART VII SYSTEMS DESCRIPTION

7.10 Fuel system

: Tank is vented with fuel sediment bowl and drain point.

capacity - Usable 30 litres
Unusable 2 litres
Total 32 litres

Fuel is led from the tank through a fuel line with filter through a primer bulb to the lift pump of the engine and thence to the carburettor.

NOTE . Refer to the Rotax Operators Manual for a more detailed description of the fuel system.

7.11 Ignition and electrical system

: The Rotax engine is fitted with a Bosch magneto generator. This produces electric power for the ignition coils and does not require a battery source.

: A lighting circuit, incorporated in the generator, produces a 12v 120w current which can be used for lights, radios or other equipment.

NOTE : A more detailed description is given in the Rotax Operators Manual.

7.12 Optional equipment

: Brakes - cable operated.. A hand lever mounted on the control column. actuates cables running to brakes on each of the main wheels. The system does not allow differential braking.

hydraulically operated.. a hand lever attached to the control column actuates hydraulic rams and brakes on each main wheel. The system does not allow differential braking.

: Avionics - Various avionics are available and the operating instructions supplied by the manufacturer are to be refered to.

: Instruments - A comprehensive range of instruments is available and come complete with fitting and operating instructions.

: Floats - Standard floats are available with or without a mounting kit.

: Parachute - Various parachutes are available. Complete operating instructions are supplied with the parachute.

PART 8 SERVICE REQUIREMENTS

INDEX

PART 8 SERVICE REQUIREMENTS

8.0 Introduction

This section contains the recommended inspection and service hours for the various components of the airrcaft.
Commonsense should prevail to carryout more frequent inspections, lubrication and servicing when operating in unfavourable environments, such as dusty and sandy areas.

8.1 Preflight inspection

Although the prefilight inspection as shown in section 4.3 is to be undertaken thoroughly, it does not constitute the more detailed inspection required by the following section 8.3

8.2 Legend

C - Check condition and replace if necessary

L - Lubricate

R - Replace

T - Tighten or torque

8.3 Inspection and service schedule

HOURS ---------	FIRST	EVERY					ONE
	10	10	25	50	100	200	YEAR
AIRFRAME							
Aileron bolts, hinges	C				C		C
Bellcranks	C				C		
Bearings	C				C		
Bolts and nuts	CT				CT		
Bolt sleeves	C				C		
Brakes	CT		CT				
Bushings	C				C		
Cable tension	CT	CT					
Cables - kinked, frayed, damaged	REPLACE AS NECESSARY						
Cable guides	C				C		
Cable pulleys	C				C		
Cable crimps, swages	C	C					C
Cable thimbles	C	C					C
Clevis pins and rings REMOVE	C				C		
Compression tubes	C					C	
Fabric	C				C		
Fuel tank	C				C		
Fuel tank attach brackets/straps	CT				CT		
Fuel lines and clamps	CT		CT				
Fuel primer pump	C				C		
Fuel filters			R				
Harnesses	C			C			C

PART 8 SERVICE REQUIREMENTS

HOURS --------	FIRST 10	EVERY 10	25	50	100	200	ONE YEAR
Instruments	C				C		C
King post through wire area	C				C		C
Landing gear legs	C				C		C
Landing gear attach brackets/bolts	CT			C			C
Lexan fittings	C				C		
Plastic washers and fittings	C				C		
Push rods	CT				CT		C
Rivets	C			C			
Safety lock wire	C		C				
Seats and attach brackets	C				C		
Tailwheel and fork	CTL	CTL					CTL
Tailspring	C			C			
Tubing	C				C		C
Tyres	C				C		C
Wheels	C				C		C
Windscreen	C				C		
Wing - complete disassemble						C and every 2 years	
Wing - fittings on compression tubes						C and every 2 years	
Wing - connector platse/saddles						C and every 2 years	
Wing - ribs for shape and Lexan tips						C and every 2 years	
ENGINE - refer also to Rotax Operators Manual							
Timing	C	C					C
Spark plugs	C	C					C
Air filter	C	C	More often in dusty conditions				
Fan belt - cooling fan	C		C				C
Engine mounts, studs,bolts,nuts	C		C				C
Decarbonise					C		
BELT REDUCTION UNIT							
Mount bolts	CT				CT		
Pulley shaft -Loctite if end play	C				R Locktite		C
Pulley bearings	C		C				
'V' belts	C		C				
TENSION.. Belt deflection to be	3 - 5 mm(1/8 - 3/10" when depressed between pulleys						
GEAR REDUCTION UNIT							
Oil level	R		C		R		R
Mounting bolts and nuts	CT		CT				
Vent plug and safety wire	C				C		
Propeller tip claerance	C		C				
PROPELLER							
Alignment and tracking	C T			CT			C T
NOTE: This check should be made every 30 days or more							

PART 9 ASSEMBLY AND DISASSEMBLY

PART 9

9.1 WING FITMENT

a. Lay out wing with centre opening uppermost and check both wing halves are connected correctly (see diagram 9.1)

b. Position king post to rest on engine.

c. With two assistants, lift wing and moving from the front of the aircraft lower the rear spar connector plate (XPM-006WP) into the rear spar mounting plate (xpm-077WP)
Position the two lock plates (XPM-078WP) over the spar and bolt with AN4-24A, nut AN364-42BA, washer AN960-416 in two places.
Diagram 9.2 refers.

d. Lower forward wing spar connctor plate (XPM-006WP into the forward mounting plate (Xpm-008WP)
Position the two lock plates (XPM-007KP) over the spar and bolt with AN4-24A, nut AN364-42BA, and washer AN960-416 in two places
Diagram 9.3 refers.

e. Insert upper wing cable plug into the top end of front king post tube (KP-1D) and insert clevis pin MS2C-42 and ring off with large safety ring
Diagram 9.4 refers.

f. Position king post front tube (KP-1D) into king post swivel (KP-4D) and insert clevis pin MS2C-42 and ring off with large safety ring.
Diagram 9.5 refers

g. Before closing fabric cover strip, check again that all bolts, nuts washers and pins are in place.

h. Raise wing tips and position fabric cover strip over Velcro material.

i. Lower wing tips gently and immediately fix bottom cables in accordance with the sequence pattern shown in schematic diagram 9.6.

j. Attach drag brace wires from mid rear fuselage to the shackle point located on the rear spar of each wing.
Insert clevis pin and ring off with safety ring.

k. Attach aileron push rods to aileron horns in accordance with diagram 9.7

l. Finally adjust tension by use of tensioning device. Tension should produce a low bass note when wire is plucked.

DISASSEMBLY OF WING

: If it is required to disassemble the wing for storage or trailering, simply reverse the Assembly procedure by starting at para 1 and working through to para a.

: Special care should be given to not losing small components such as bolts nuts and rings. It is suggested that these be reattached to the component as it is removed or else placed carefully in a plastic bag.

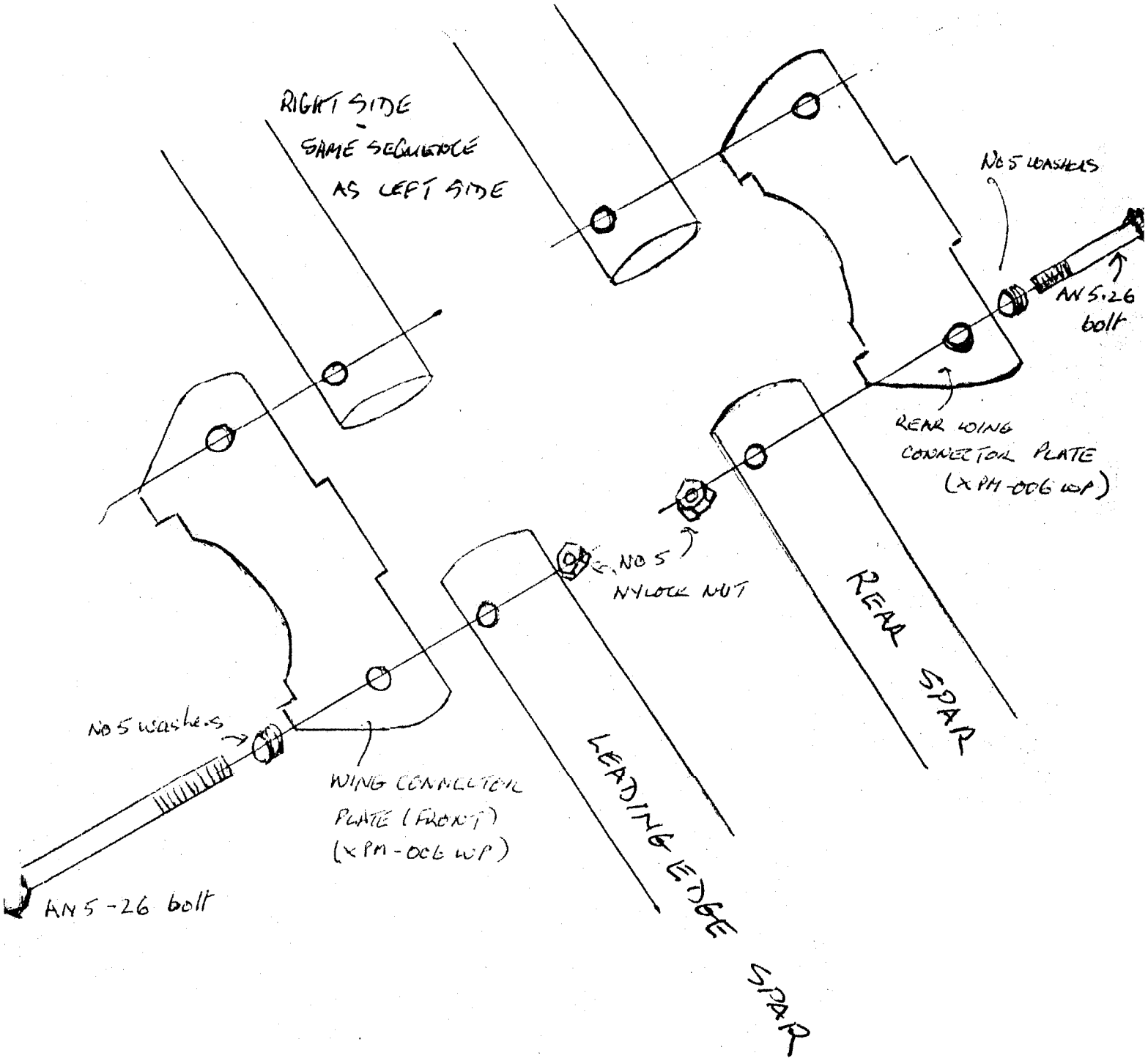

DIAGRAM 9.1 WING CONNECTION DETAIL

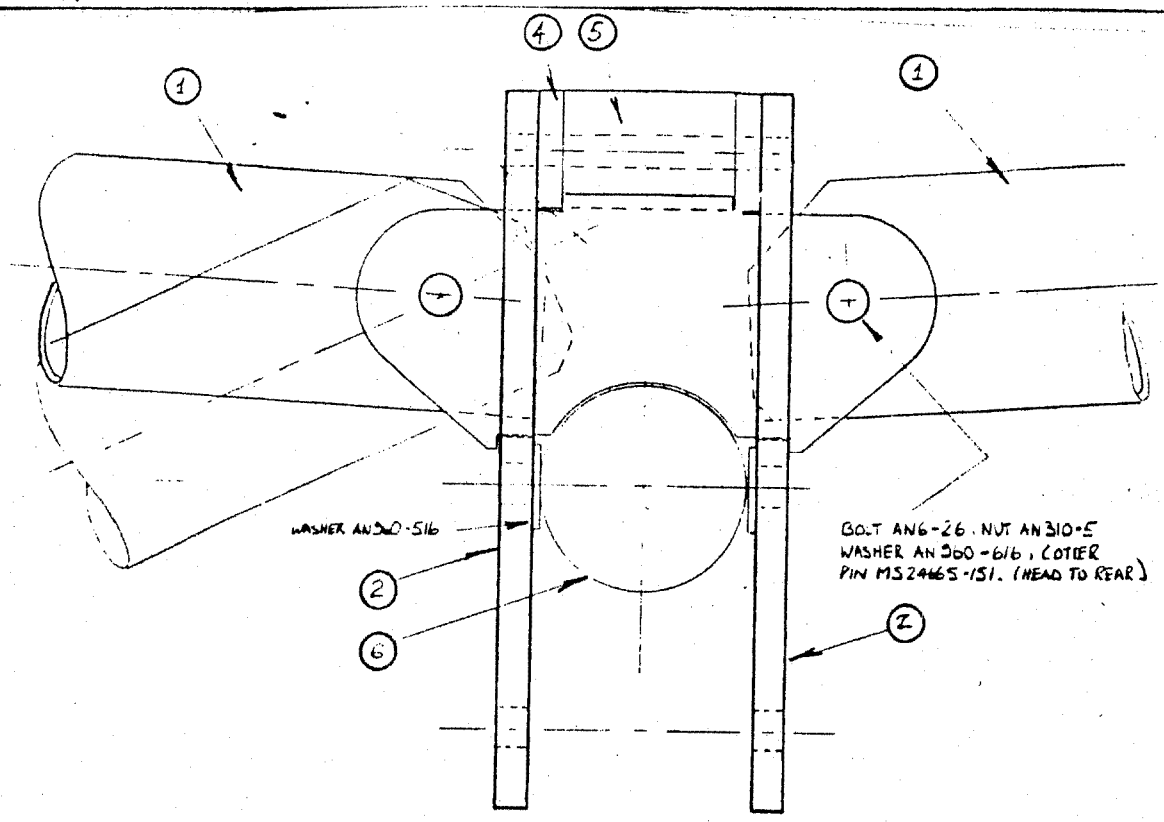

1. REAR SPAR (XPM-022WP)
2. REAR SPAR MOUNTING PLATE (XPM-077WP)
3. WING CONNECTOR PLATE (XPM-006WP)
4. LOCK-PLATE (XPM-078WP)
5. SPACER (XPM-005UF)
6. MOTOR MOUNT TUBE (UF-2XP)

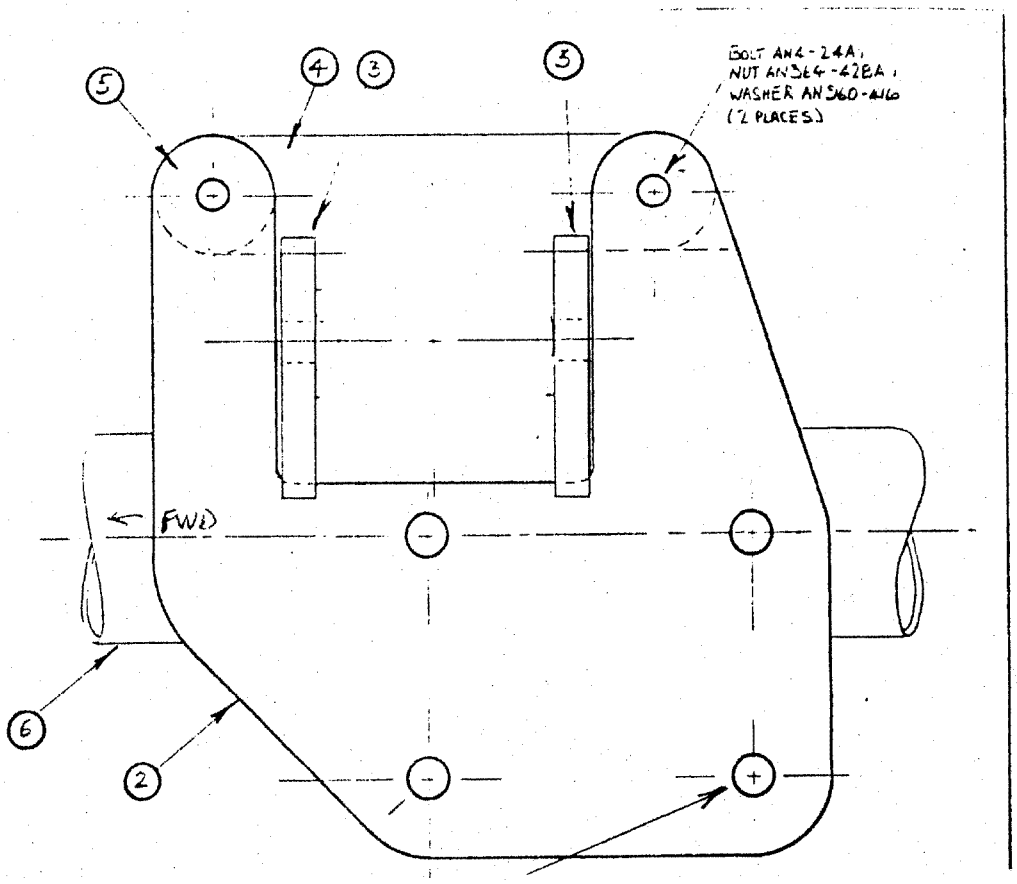

DIAGRAM 9-2

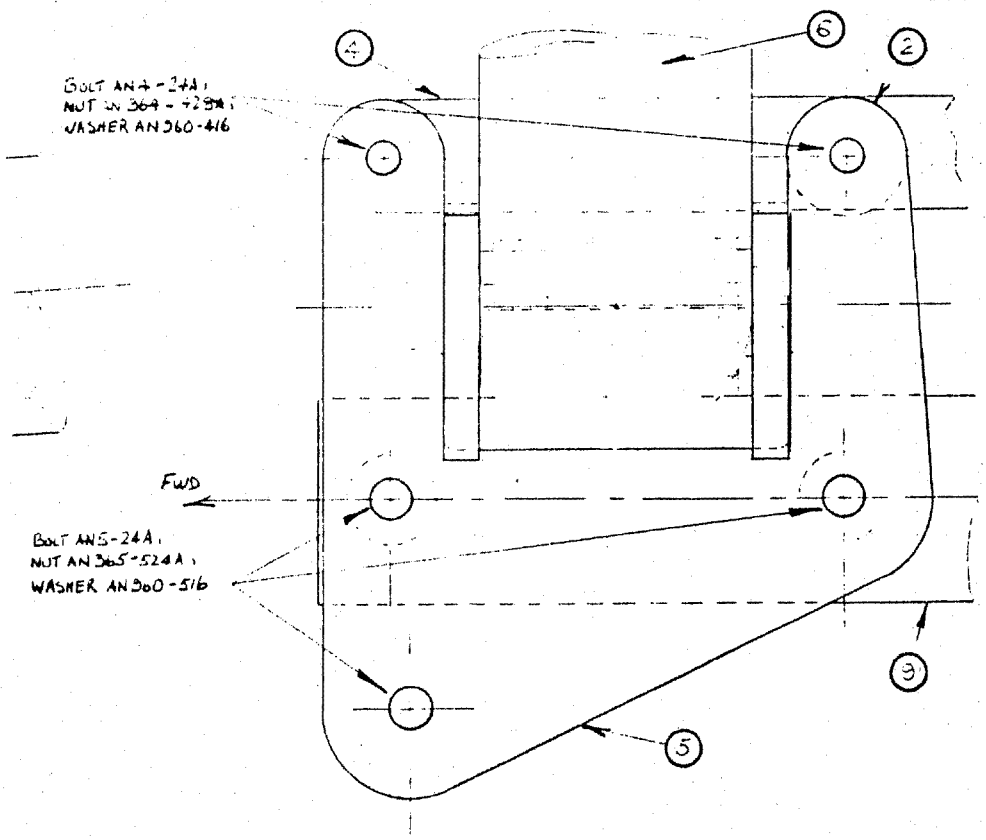

(1) SPAR PLUG PN XPM-004WP
(2) SPACER PN XPM-005UF
(3) WING CONNECTOR PLATE. PN XPM-006WP
(4) WING LUGS PN XPM-007KP
(5) WING MOUNT (FORWARD) PN XPM-008UF
(6) FORWARD WING SPAR PN. XPM-009WP
(7) PLUG (COMPRESSION TUBE) PN. XPM-010WP

(8) MOTOR MOUNT TUBE PN UF-2XP

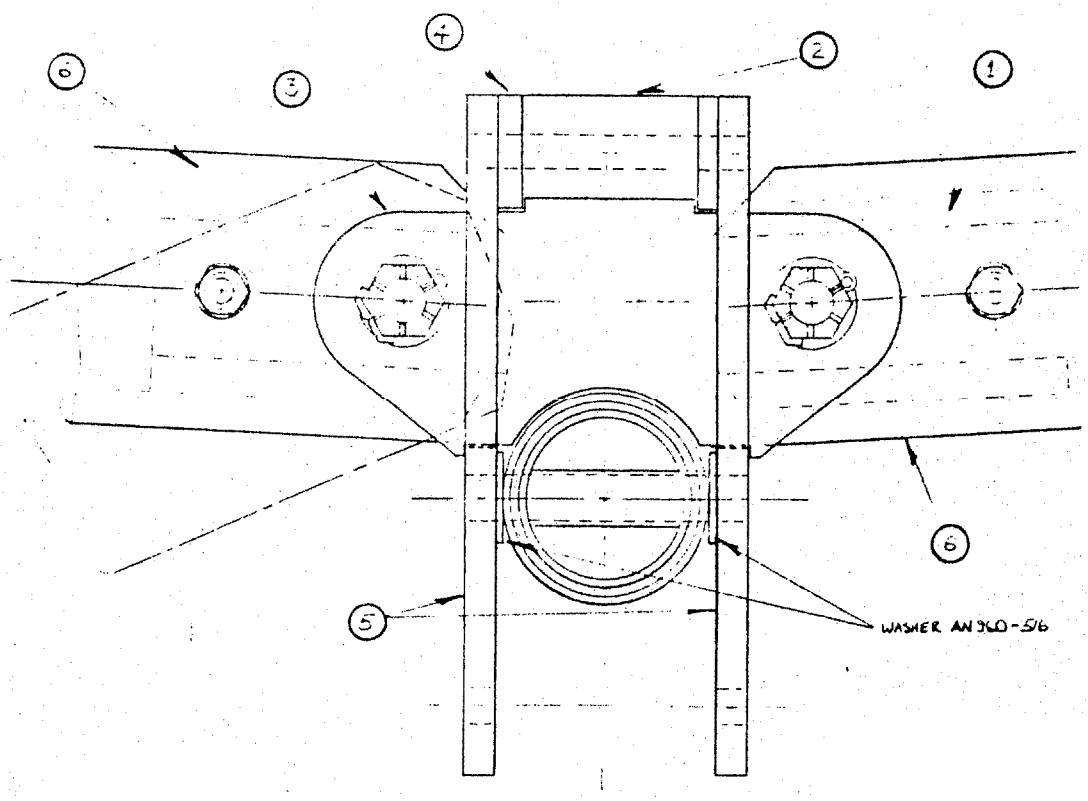

DIAGRAM 4.3

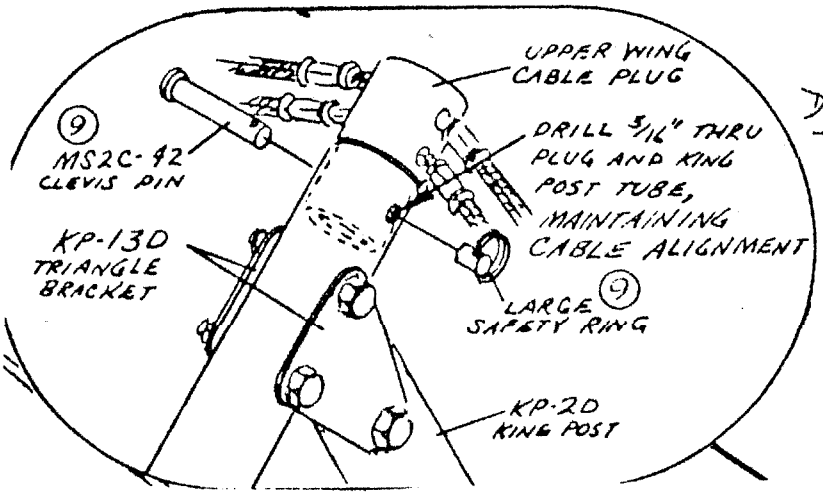

DIAGRAM 9.4

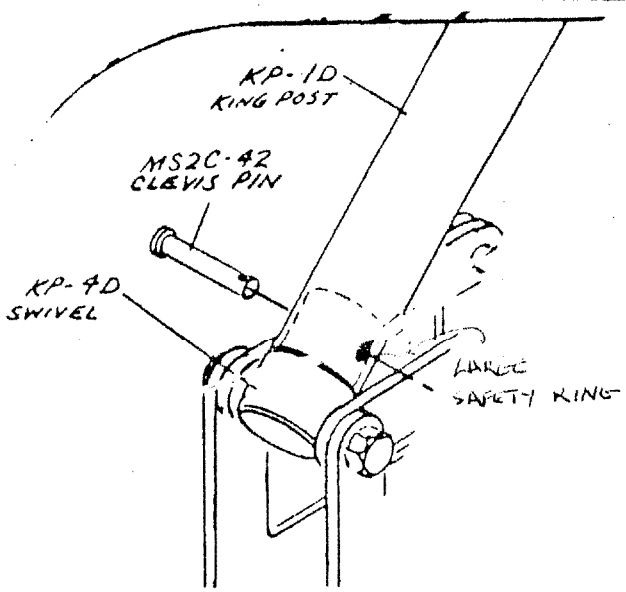

DIAGRAM 9.5

SCHEMATIC

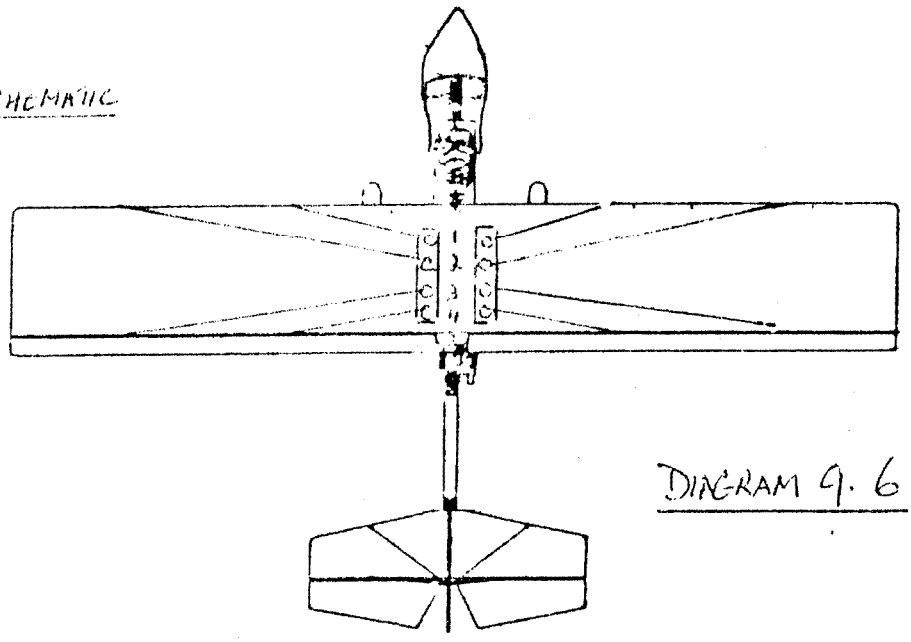

DIAGRAM 9.6

DIAGRAM 9·7

AL-D

DETAIL 35

MODEL: XP503

HARDWARE GROUP LIST

(3) (7) (10) (13) (14) (15) (19) (21)

NOTE

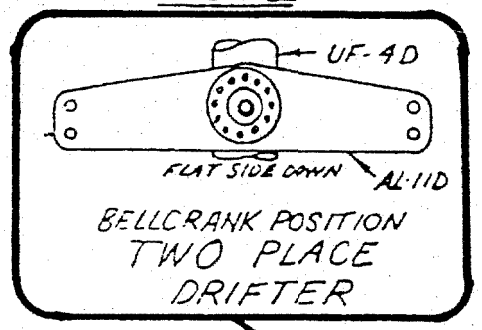

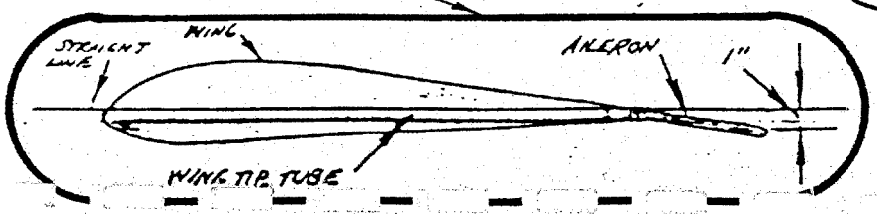

NOTE: AILERON PUSH ROD (AL-9D) LENGTH DETERMINED AFTER WING AND AILERON INSTALLED. SET AILERON TRAILING EDGE 1 INCH LOWER THAN RIM OF WING TIP TUBE, SEE BELOW.

COTTER KEY (10)

4-CN (10)

4-FW (15)

AL-19D

AN3-10 (7)

(21) SS-44 RIVETS 12 PLACES, SECURE BEARING TO BELLCRANK

AILERON PUSH ROD ATTACH HOLE

AILERON CABLE ATTACH HOLE

5½"

UF-4D

(7) AN3-10

AL-18D (15)

4-LFW

AL-ROD BEARING

(15) 4-LFW

AL-11D BELLCRANK SEE NOTE

AN4-27 (3)

(10) 3-LW

(14) 3-FW

AL-8D (AILERON HORN)

(14) 3-LFWS

(7) AN3-10

(14) 3-LW

COTTER

AL-25D MALE ROD

3-HNF

AL-23D THREADED

13/16

5/8

(19) AN470AD4-9 BUCK RIVET

AN470 BUCK

90°

AL-9D (SEE NOTE)

NOTE: THREADED AND MALE END ASSEMBLY SEQUENCE ENDS OF ROD (AL-9D)

AL-2 MALE

3-LW (14)

3-LFW

3

3-LW (14)

(14) 3-LW

(14) 3-LFWS

(10) 3-CN

COTTER KEYS (10)

REVISED 3 JULY 87

PART 9.

9.2 Propeller fitment and tracking

: before working on propeller ensure ignition is OFF. An additional safety measure is to remove the spark plugs. This also makes for easier tracking by relieving compression.

: ensure propeller is in good repair: no nicks, splits, no bruised or elongated bolt holes. The varnish or paint should be smooth and even. Any repairs should only be undertaken by a competent person

: ensure the propeller is in balance. Minor imbalance may be corrected by applying a coat of varnish or paint to the 'lighter' side. If the propeller is grossly out of balance, a competent person should assess and rectify the problem.

: the propeller is to be installed in accordance with diagram 9.8

: the propeller is positioned over the centering boss of the gearbox propeller mounting back plate with the cambered surface facing towards the front of the aircaft.

: before inserting propeller bolts (AN4H-27A), place two AN4 flat steel washers over the bolt.

: insert bolts through the propeller front plate thence through the propeller into the gearbox propeller mounting back plate.

: tighten to finger tight.

NOTE : Do not use Locktite or any other glue in the thread of the back plate nor on the propeller bolt.

: place a set square, or block of wood, on the fuselage and position within 4 mm of either the front side or back side of the propeller blade tip.

: tighten one bolt a little and check distance of blade from set square.

: rotate propeller one half of a turn and tighten opposite bolt and check the distance of the set square from the blade.

: continue gradually tightening each bolt in accordance with sequence shown in diagram 9.9, and checking tracking each time.

: bolts are to be tightened to approx. 8 ft-lbs.

: to ensure proper tracking, the maximum distance between the set square and each blade tip, should not exceed 2 mm.

: thread safety lock wire through bolts in accordance with diagram 9.10

see over for diagrams

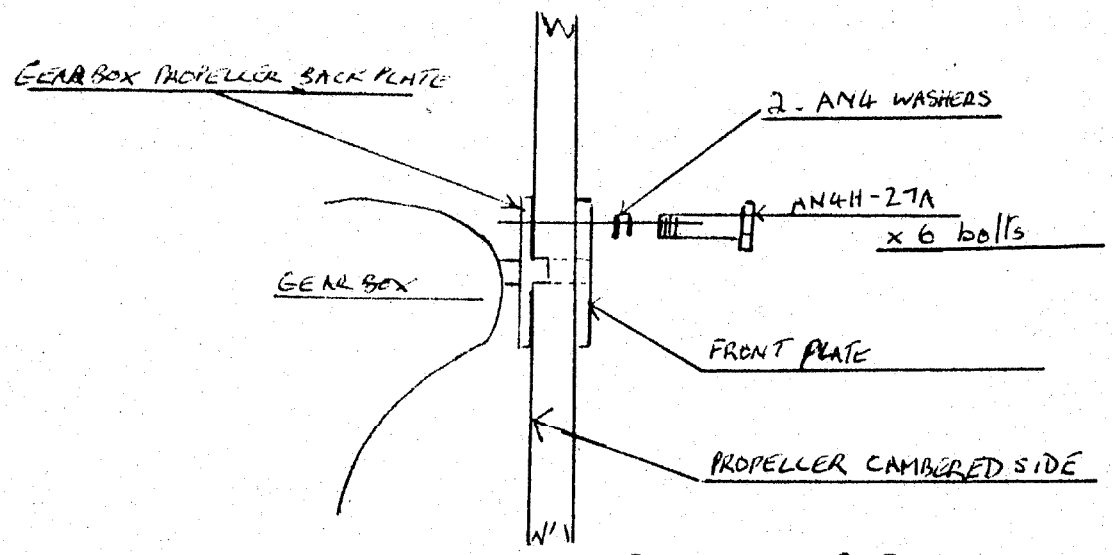

DIAGRAM 9.8

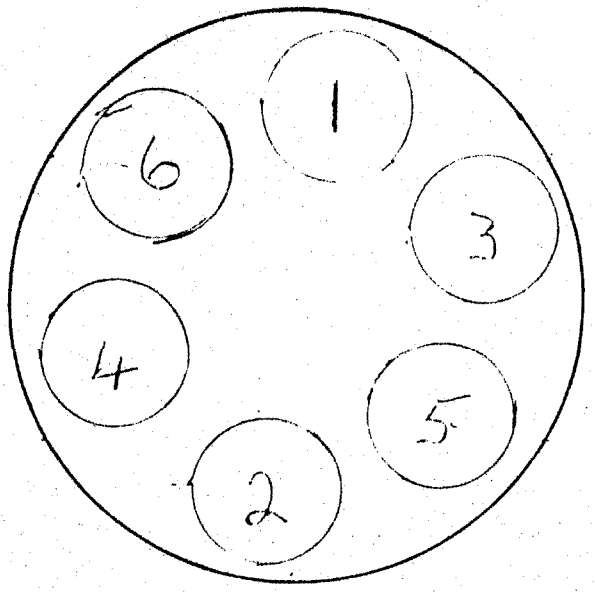

BOLT TIGHTENING SEQUENCE

DIAGRAM 9.9

LOCK WIRE SEQUENCE

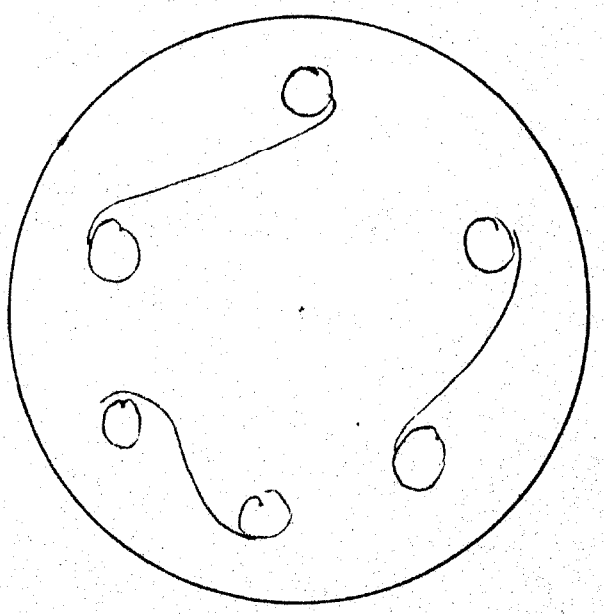

DIAGRAM 9.10