LINES PLAN

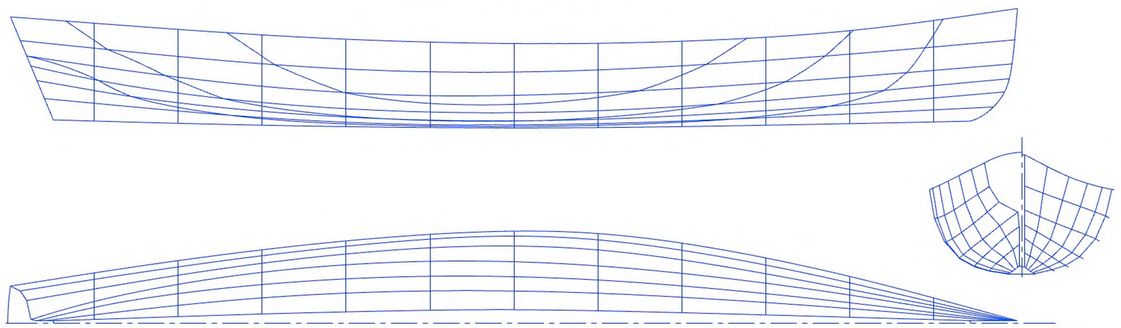

Length	15 ft 9 in.	4.8 m.
LWL	14 ft. 10 in.	4.54 m.
Beam	34 1/2"	88 cm.
WL Beam	28 in.	71 cm.
Capacity	310 lbs.	140 kg.

Designed as an efficient row boat for a local builder who wanted a boat for rowing on the river near his home. His prefernce is for sliding seat rowing but the boat can be set up for fixed seat rowing and has offers the option of taking a passenger, a second rowing station is set up forward to help balance the boat when paddled two up. Designed to be built using the stitch and glue method with a multichine hull assembled using the transom, frames and a couple of small jigs to form the hull.

PLYWOOD KIT PARTS

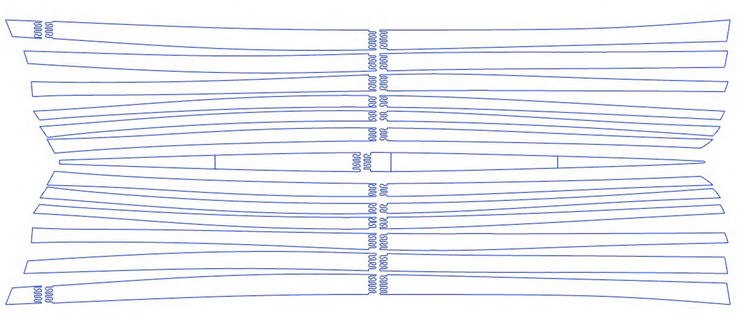

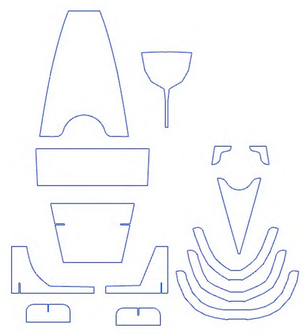

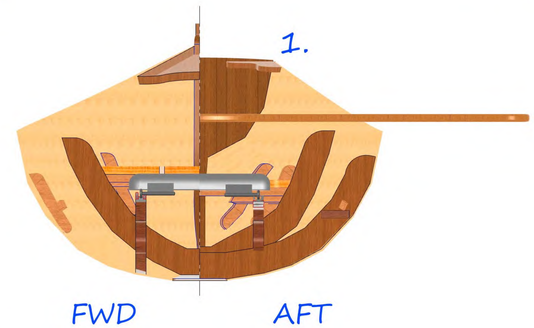

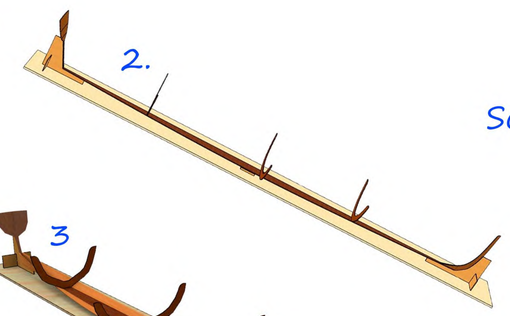

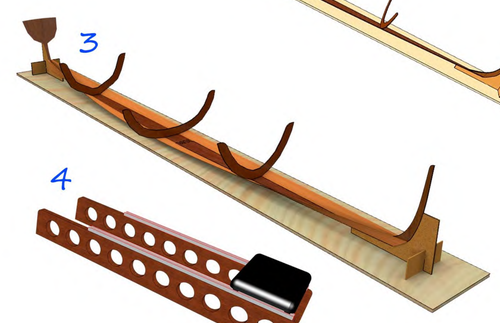

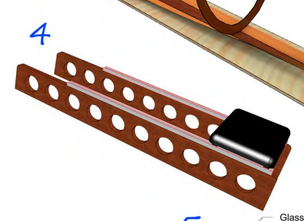

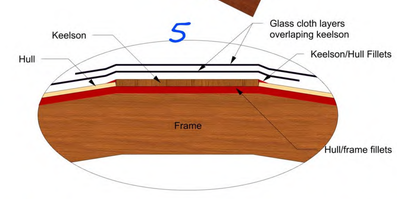

KITS

The boat can be built from a kit which will contain all the plywood pieces shown on the bottom left of this page plus the following:

Lumber for sheer clamps, and stem
Fiberglass cloth for sheathing the hull
Epoxy & hardener w/ metering pumps
Wood flour to thicken epoxy for gluing
Wire for stitches

Some of the items will vary from kit to kit depending on the options choosen, such as rowing system

1. Sections through the hull showing the sliding seat rig and interior details.
2. Backbone consisting of the inner stem, keelson, frames and end jigs set up ready to plank.
3. First planks in place tying all the parts together, may need to warm or wet plank to twist the aft end of the plank.
4. Sliding seat setup, builders can make their own, or purchase a manufactured unit.
5. Construction detail of boat bottom.

© Otto Vallinga Yacht Design

This design is the intellectual property of the designer and is protected by copyright. It is provided as an instrument of service and as such remains the property of the designer, use for commercial purposes, sale or transfer to any third party is expressely prohibited without the permission of the designer.

Plans for this boat have been developed and the customer who ordered the design has the first kit but we have never built the boat here in our shop, this is the reason for the renders in place of construction pictures.

Design: DRBi 454
Dwg: Study Plan