Modulate Frame 07:
Double Sided

(2) prints to make (1) double sided graphic

Front and Back panel:
Total graphic area: 94.25"w X 96.25"h
Total finished area: 90.25"w X 92.25"h

Please be sure to include the 2" bleed around the perimeter (note trim & stitch locations on template). DO NOT design any critical elements (text, logos, etc.) within 2" of the edge.

General Art Guidelines:

– CMYK Color Mode

– All Solid Coated Pantone colors should be called out in the art as spot colors

– Embed all images and support files

– Resolution must be 100-120 ppi

– All fonts must be created to outlines

– Do not scale artboard

– Background color/images must bleed to the edge of artboard

– Do not use spot colors from template in your artwork as they will not print

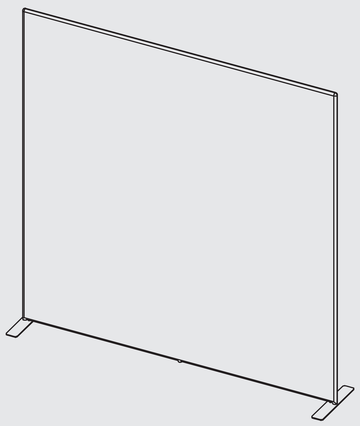

FRONT

BACK

bleed area
trim line
safe zone