CONTENTS

TIMBERWOLF
TW 190TVGTR

INTRODUCTION

Thank you for choosing Timberwolf. Timberwolf chippers are designed to give safe and dependable service if operated according to the instructions.

IMPORTANT HEALTH AND SAFETY INFORMATION

Before using your new chipper, please take time to read this manual. Failure to do so could result in:

- PERSONAL INJURY
- EQUIPMENT DAMAGE
- DAMAGE TO PROPERTY
- 3RD PARTY INJURIES

This manual covers the operation and maintenance of the Timberwolf TW 190TVGTR. All information in this manual is based on the latest product information available at the time of purchase.

All the information you need to operate the machine safely and effectively is contained within pages 2 to 13. Ensure that all operators are **properly trained** for operating this machine, especially **safe working practices**.

Timberwolf's policy of regularly reviewing and improving their products may involve major or minor changes to the chippers or their accessories. Timberwolf reserves the right to make changes at any time without notice and without incurring any obligation.

Due to improvements in design and performance during production there may be, in some cases, minor discrepancies between the actual chipper and the text in this manual.

The manual should be considered an important part of the machine and should remain with it if the machine is resold.

ALWAYS FOLLOW SAFE OPERATING AND MAINTENANCE PRACTICES

CAUTION or WARNING

BE AWARE OF THIS SYMBOL AND WHERE SHOWN, CAREFULLY FOLLOW THE INSTRUCTIONS.

This caution symbol indicates important safety messages in this manual. When you see this symbol, be alert to the possibility of injury to yourself or others and carefully read the message that follows.

The Timberwolf TW 190TVGTR

Designed to chip solid wood material up to 190mm in diameter and capable of chipping up to 6.5 tonnes of brushwood per hour.

DIMENSIONS

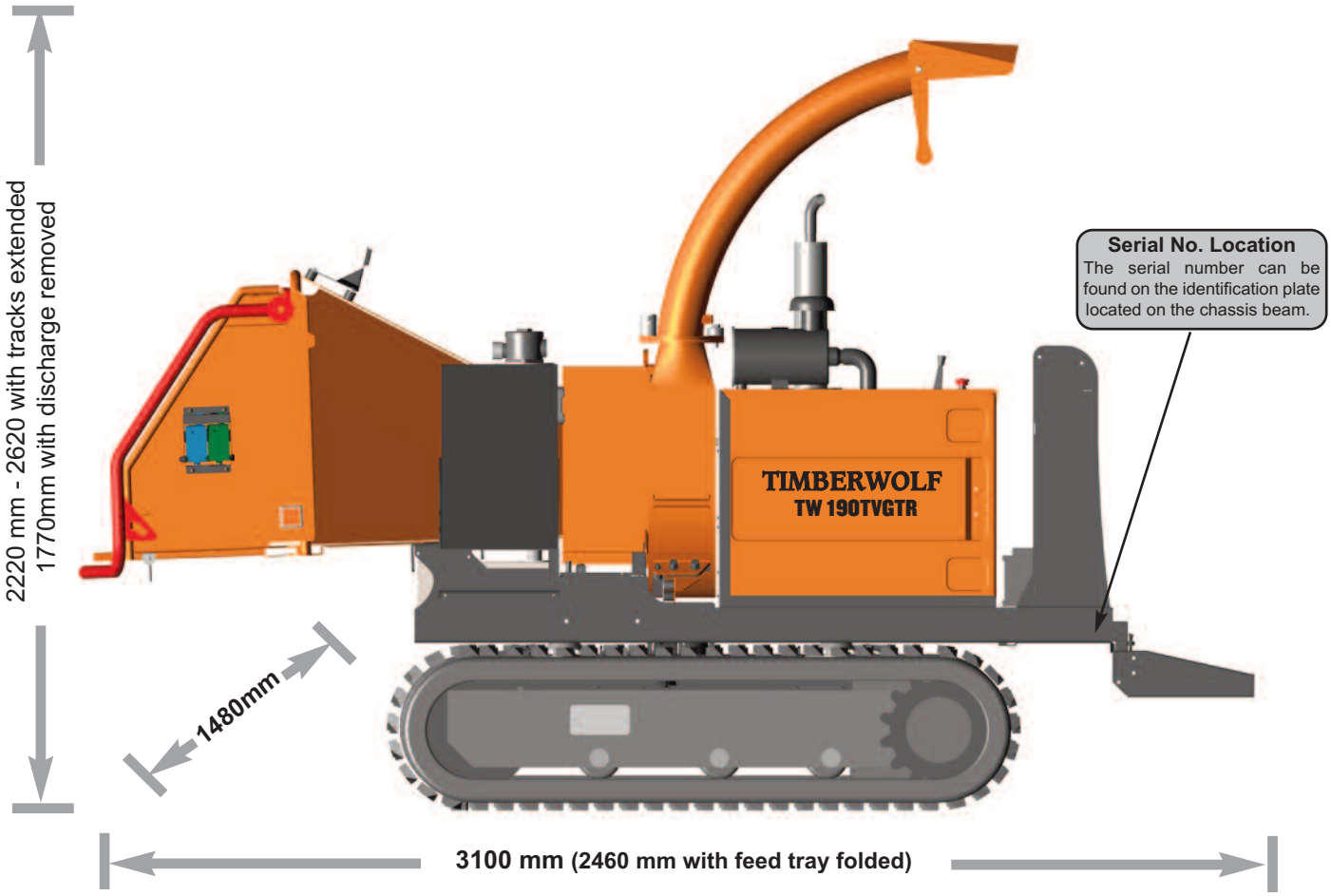

TIMBERWOLF TW 190TVGTR SPECIFICATION

Engine type	*Kubota 4-cylinder turbo diesel*	Maximum diameter material	*190mm (7½")*
Maximum power	*33kW (45hp)*	Fuel capacity	*51 litres*
Cooling method	*Water cooled*	Hydraulic oil capacity	*44 litres*
Overall weight	*1873 kilos*	Material processing capacity	*up to 6.5 tonnes/hr*
Starting method	*Electric*	Fuel type	*Diesel*
Roller feed	*Twin series hydraulic motors*		

PARTS LOCATOR

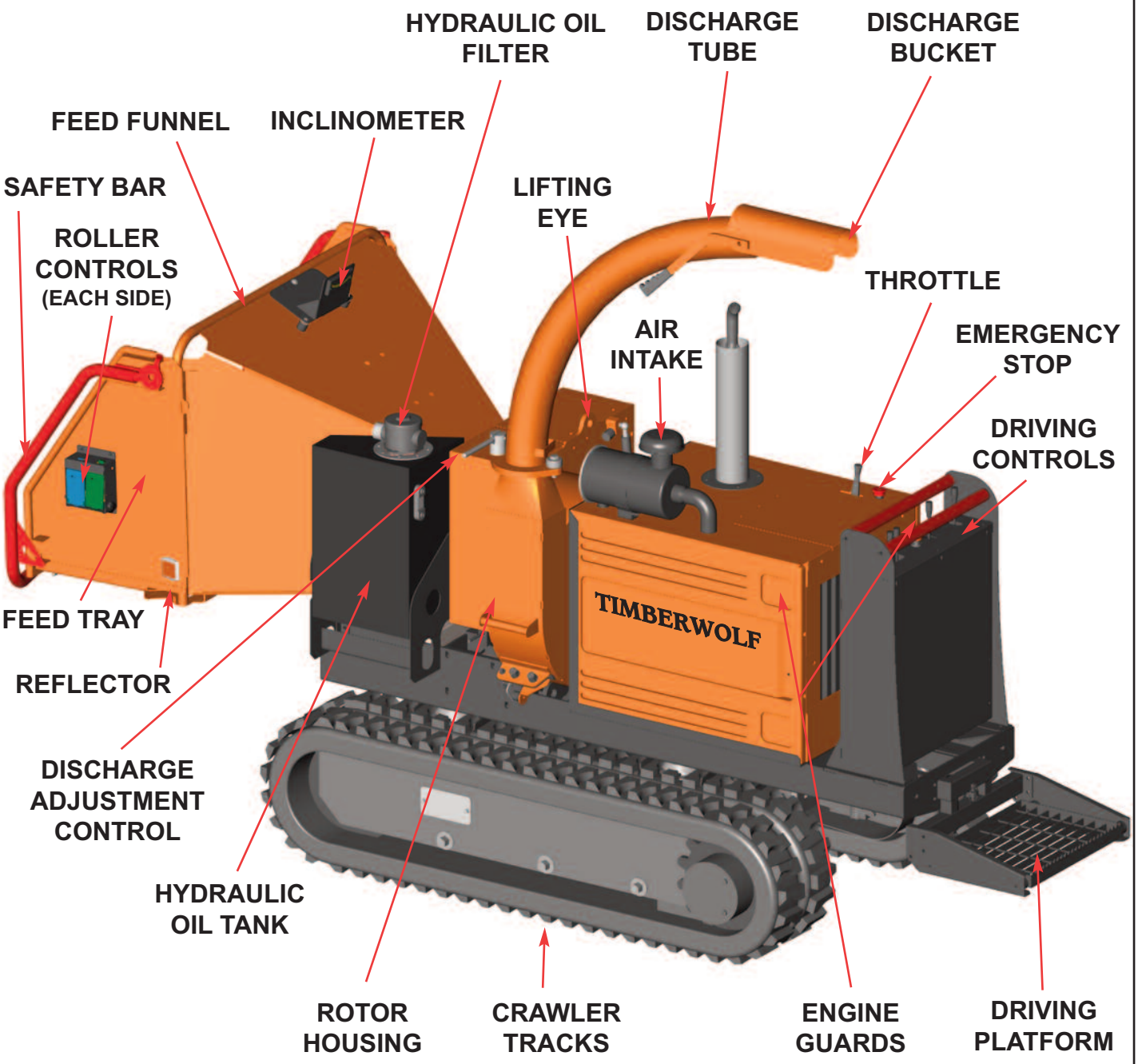

PARTS LOCATOR

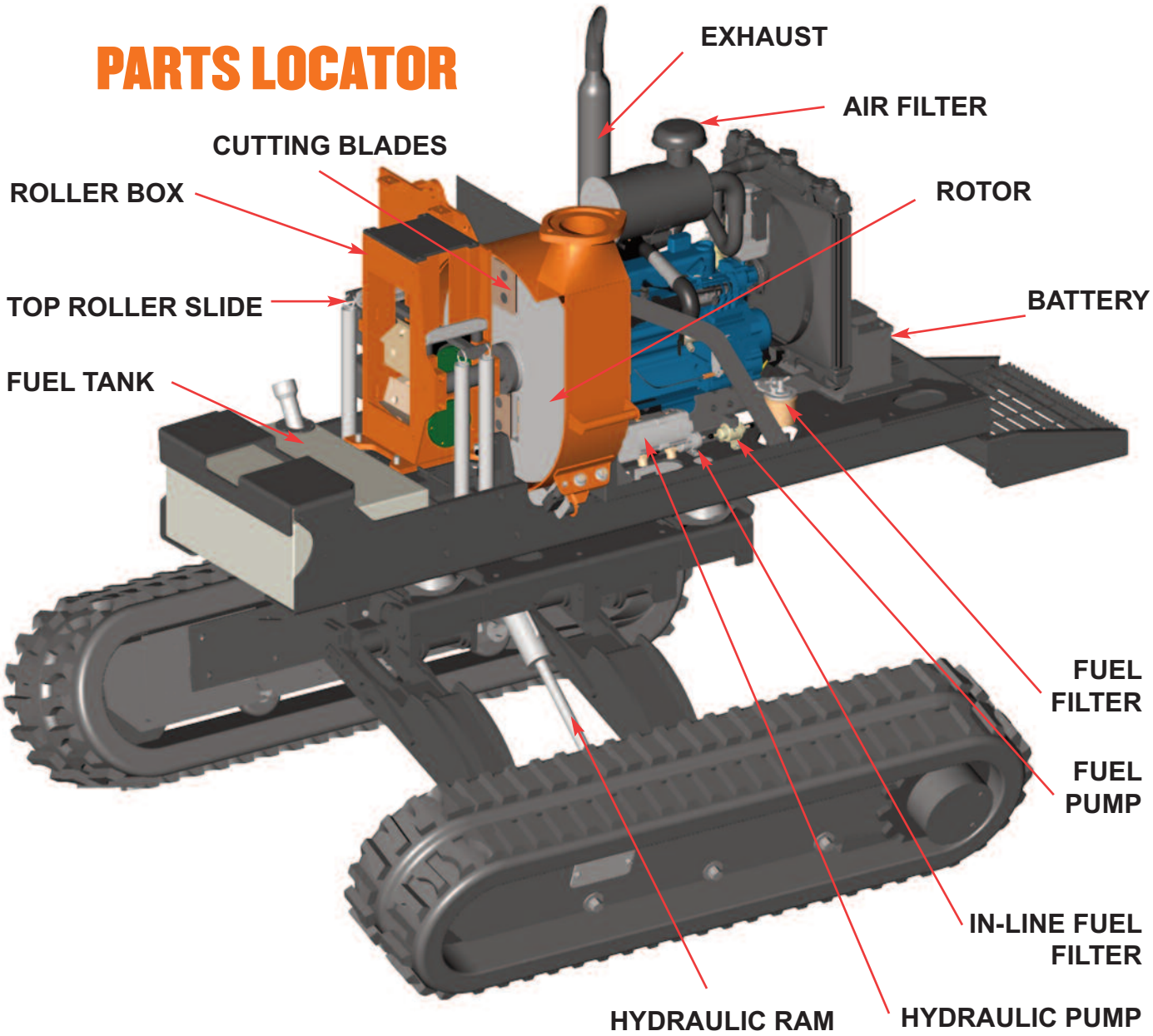

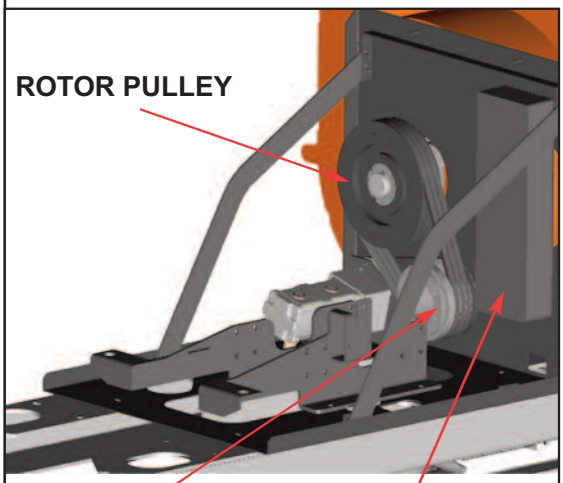

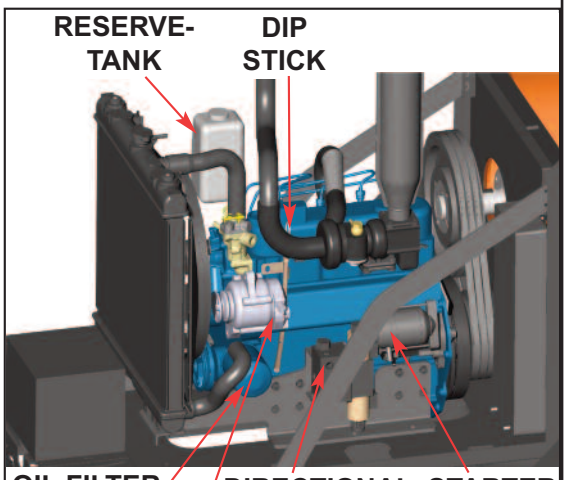

WARNING

The chipper will feed material through on its own. To do this, it relies on sharp blades both on the feed rollers and the chipper rotor. To keep the blades sharp, only feed the machine with clean brushwood. DO NOT put muddy/dirty wood, roots, potted plants, bricks, stones or metal into the chipper.

OPERATOR'S PERSONAL PROTECTIVE EQUIPMENT REQUIRED

Chainsaw safety helmet fitted with mesh visor and recommended ear defenders to the appropriate specifications.

Close fitting heavy-duty non-snag clothing.

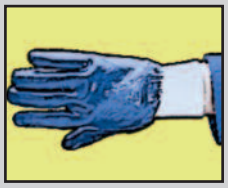

Work gloves with elasticated wrist.

Face mask if appropriate.

Steel toe cap safety boots.

DO NOT
wear rings, bracelets, watches, jewellery or any other items that could be caught in the material and draw you into the chipper.

BASIC WOODCHIPPING SAFETY

The operator should be aware of the following points:

- MAINTAIN A SAFETY EXCLUSION ZONE around the chipper of at least 10 metres for the general public or employees without adequate protection. Use hazard tape to identify this working area and keep it clear from debris build up. Chips should be ejected away from any area the general public have access to.
- HAZARDOUS MATERIAL - Some species of trees and bushes are poisonous. The chipping action can produce vapour, spray and dust that can irritate the skin. This may lead to respiratory problems or even cause serious poisoning. Check the material to be chipped before you start. Avoid confined spaces and use a facemask if necessary.
- BE AWARE when the chipper is processing material that is an awkward shape. The material can move from side to side in the funnel with great force. If the material extends beyond the funnel, the brash may push you to one side causing danger. Badly twisted brash should be trimmed before being chipped to avoid thrashing in the feed funnel.
- BE AWARE that the chipper can eject chips out of the feed funnel with considerable force. Always wear full head and face protection.
- ALWAYS work on the side of the machine furthest from any local danger, e.g. not road side.

GENERAL SAFETY MATTERS

DO'S AND DON'TS

ALWAYS stop the chipper engine before making any adjustments, refuelling or cleaning.

ALWAYS check rotor has stopped rotating and remove chipper ignition key before maintenance of any kind, or whenever the machine is to be left unattended.

ALWAYS check the machine is well supported and cannot move.

ALWAYS operate the chipper with the engine set to maximum speed when chipping.

ALWAYS check (visually) for fluid leaks.

ALWAYS take regular breaks. Wearing personal protective equipment for long periods can be tiring and hot.

ALWAYS keep hands, feet and clothing out of feed opening, discharge and moving parts.

ALWAYS use the next piece of material or a push stick to push in short pieces. Under no circumstances should you reach into the funnel.

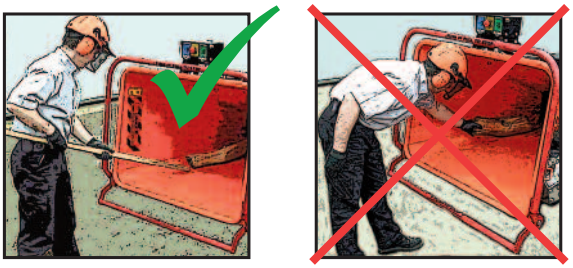

ALWAYS keep the operating area clear of people, animals and children.

ALWAYS keep the operating area clear from debris build up.

ALWAYS keep clear of the chip discharge tube. Foreign objects may be ejected with great force.

ALWAYS ensure protective guarding is in place before commencing work. Failure to do so may result in personal injury or loss of life.

ALWAYS operate the chipper in a well ventilated area - exhaust fumes are dangerous.

DO NOT operate chipper unless available light is sufficient to see clearly.

DO NOT use or attempt to start the chipper without the feed funnel, guards and discharge unit securely in place.

DO NOT stand directly in front of the feed funnel when using the chipper. Stand to one side.

DO NOT allow -

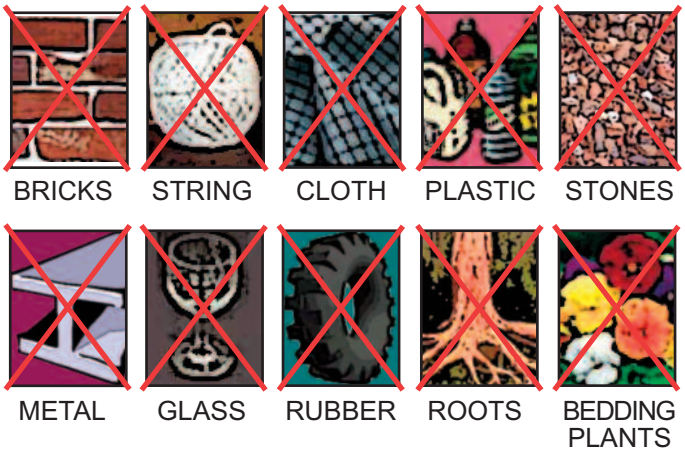

- to enter the machine, as damage is likely.

DO NOT smoke when refuelling.

DO NOT let anyone who has not received instruction operate the machine.

DO NOT climb on the machine at any time.

DO NOT handle material that is partially engaged in the machine.

DO NOT touch any exposed wiring while machine is running.

DO NOT use the chipper inside buildings.

NOISE TEST

MACHINE: TW 190TVGTR

NOTES: Tested chipping 120mm x 120mm corsican pine 1.5m in length

Noise levels above 80dB (A) will be experienced at the working position. Wear ear protection at all times to prevent possible damage to hearing. All persons within a 4 metre radius must also wear good quality ear protection.

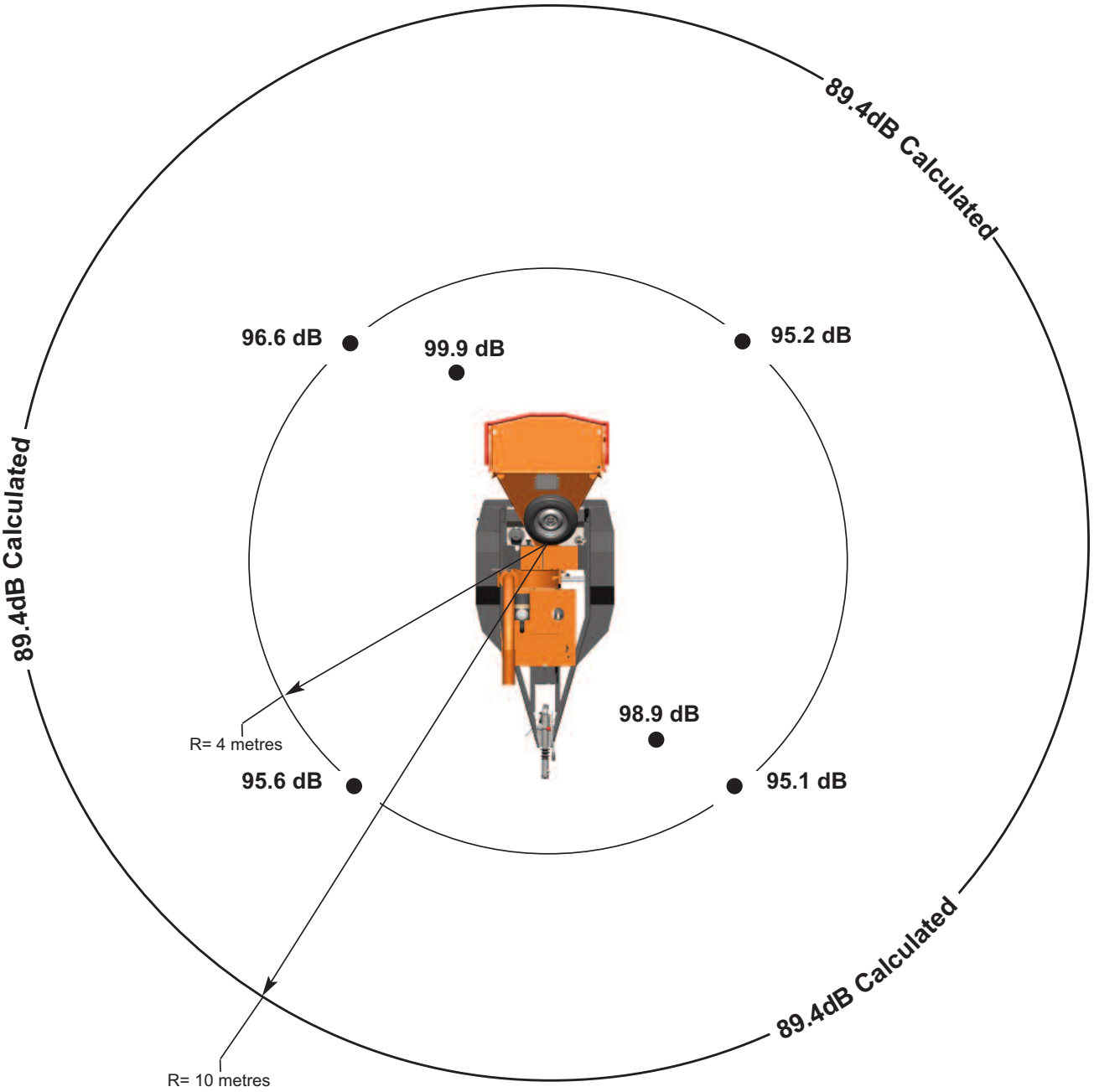

Guaranteed Sound Power: 119dB (A)

As required by Annex III of Directive 2000/14/EC "Noise Emission in the environment by equipment for use outdoors".

DELIVERY

All Timberwolf TW 190TVGTR machines have a full pre - delivery inspection before leaving the factory and are ready to use. Read and understand this instruction manual before attempting to operate the chipper. In particular, read pages 6-8 which contain important health and safety information and advice.

OPERATOR'S PERSONAL PROTECTIVE EQUIPMENT REQUIRED

- CHAINSAW safety helmet fitted with visor and recommended ear defenders to an appropriate specification.
- HEAVY-DUTY gloves with elasticated wrist area.
- CLOSE - FITTING heavy-duty non-snag clothing.
- SAFETY footwear.
- FACE MASK (if appropriate).

See page 6 for more detailed information.

MANUAL CONTROLS

Roller control box - is the control box above the feed opening of the chipper funnel. Its function is to control the feed rollers. The feed rollers draw material into the machine. ***It does not control the main rotor.***

RED SAFETY BAR = This is the large red bar that surrounds the feed tray and side of the feed funnel. The bar is spring loaded and connected to a switch that will interrupt the power to the rollers. The switch is designed so that it only activates if the bar is pushed to the limit of its travel. The rollers stop instantly, but can be made to turn again by pressing either the GREEN FEED or BLUE REVERSE control buttons.

RED SAFETY BAR TEST

To ensure the safety bar is always operational it must be activated once before each work session. The rollers will not function until the bar is activated. This procedure must be repeated each time the ignition is switched off.

WARNING **DO NOT remove, jam, disable, bypass, override or otherwise impede the effectiveness of the red safety bar.**

GREEN BUTTON = Forward feed - Push the button once - this activates the rollers and will allow you to start chipping (if the rotor speed is high enough).

RED BUTTON = Emergency stop - This button stops the rollers from feeding. It overrides all other buttons or bars and will not allow the other buttons to function until it has been reset. To reset, pull out until it returns to its original position. The forward and reverse buttons will now function.

BLUE BUTTON = Reverse feed - allows you to back material out of the rollers. The rollers will only turn in reverse as long as you keep pressing the button. You do not have to press the STOP button before pressing the GREEN FEED button to recommence feeding.

Control Box Diagram

There are two control boxes, located on either side of the feed tray.

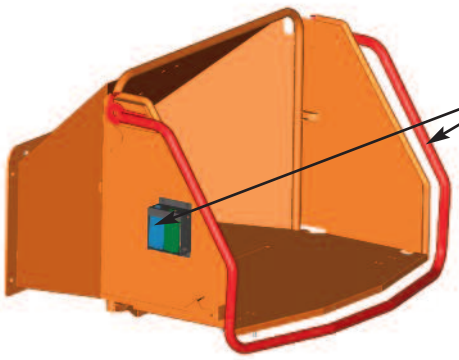

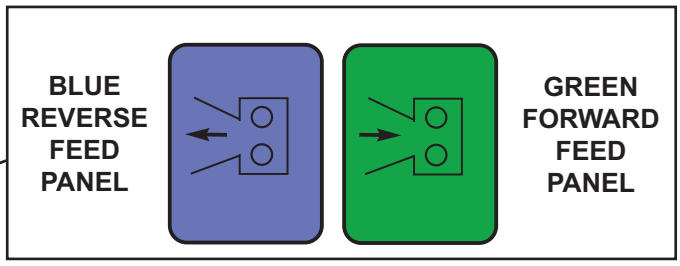

RED SAFETY BAR

Do not rely on the red bar to keep the roller stationary if it is necessary to clear or touch the roller. Always switch off the machine and remove ignition key before approaching the roller.

AUTO CONTROLS

The engine management unit controls the feed rate of the material going into the chipping chamber. If the engine speed is below the predetermined level, the engine management unit will not allow the feed rollers to work in the forward “infeed” direction, until the rotor speed rises above the predetermined level. At this point the feed rollers will start turning without warning. The reverse function will operate at any engine speed.

DAILY CHECKS BEFORE STARTING

- LOCATE the machine on firm level ground.
- CHECK machine is well supported and cannot move.
- CHECK all guards are fitted and secure.
- CHECK the discharge unit is in place and fastened securely.
- CHECK discharge tube is pointing in a safe direction.
- CHECK the feed funnel to ensure no objects are inside.
- CHECK feed tray is in up position - to prevent people reaching rollers.
- CHECK controls as described below.
- CHECK (visually) for fluid leaks.
- CHECK fuel and hydraulic oil levels.

For parts location see diagrams on pages 3 & 4.

EMERGENCY STOPPING

There are two ways of stopping the TW 190TVGTR chipper in the event of an emergency.

STOPPING THE ROLLERS

Activating the red safety bar will stop the rollers immediately. To restart the rollers, just push the green forward button or blue reverse button.

STOPPING THE ENGINE

Should the entire machine need to be stopped in an emergency the red button on top of the engine guard should be pushed. This will shut down the engine in the shortest possible time. The engine cannot be restarted until the button is pulled out again to reset it.

BLADE WEAR

The most important part of using a wood chipper is keeping the cutter blades sharp. Timberwolf chipper blades are hollow ground to an angle of 40 degrees. When performing daily blade checks ensure blade edge is sharp and free from chips, if there is any evidence of damage, or the edge is “dull” change the blade(s). The TW 190TVGTR is fitted with 2 blades 127mm (5") long. They are 100 mm wide when new. A new blade should chip for up to 25 hours before it requires sharpening. This figure will be drastically reduced by feeding the machine with stony, sandy or muddy material.

As the blade becomes blunt, performance is reduced. With increased stress and load on the machine the chips will become more irregular and stringy. At this point the blade should be sent to a reputable blade sharpening company. The blade can be sharpened several times in its life. A wear mark on the reverse side indicates the safe limit of blade wear. Replace when this line is exceeded.

The machine is also fitted with a static blade (anvil). It is important that the anvil is in good condition to allow the cutting blades to function efficiently. Performance will be poor, even with sharp cutter blades, if the anvil is worn.

CRAWLER TRACK CONTROLS

WARNING ALWAYS WEAR FULL PERSONAL PROTECTIVE EQUIPMENT WHEN DRIVING CHIPPER (SEE PAGE 5) AND ENSURE BUCKET IS CLOSED WITH DISCHARGE POINTING AWAY FROM DRIVING POSITION.

The TW 190TVGTR is designed to operate in either chip or track mode, but not both at the same time. To switch between modes, the push/pull switch is operated, this is located on the driving control panel (see parts located on page 3 - it is clearly marked. The lift function to adjust the incline and height of machine is available in both modes.

CHIPPING MODE

Power is supplied for the chipping function. The feed rollers can be operated as detailed on page 8. The machine cannot be tracked in this mode but the lift function is available to adjust the height and incline of machine, during any adjustment power will be diverted from the feed rollers.

CRAWLER TRACK MODE

Power is supplied for the tracking function only - the machine can be tracked in this mode. The rotor and blades will remain spinning, but the feed roller controls are inoperable, the lift function is available to adjust the TW 190TVGTR to suit the terrain.

When Track mode is selected the two track control valves may be operated. These have direct control over the track relevant to the each side of the machine. They are proportional valves so increased movement will result in increased track speed.

Tracking may be done at either high or low engine speed. Manoeuvring the machine in tight spaces, on variable terrain and while loading/unloading should be done with the engine on low speed.

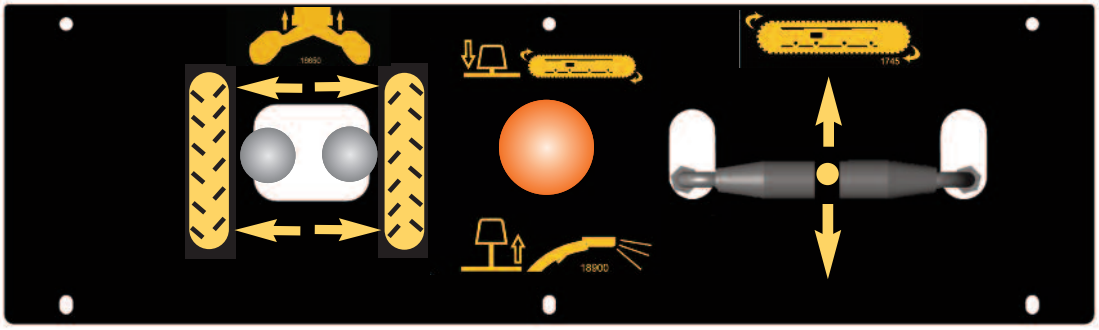

LIFTING MODE

Power is available for the lift function in both chip and track mode. The machine can be lifted by means of the two control levers, each lever (left and right) controls the lift action of the corresponding track. From its closed position, when the levers are moved forward, the track will move out horizontally before it lifts the machine - take care to allow for the extra width and height when performing this function. To lower the machine, move the lever in the reverse direction, the machine will be lowered first before the track is pulled horizontally back into the closed position.

The inclonometer (positioned on the top of the feed funnel) indicates the angle of incline of the chipper.

WARNING ALWAYS WEAR FULL PERSONAL PROTECTIVE EQUIPMENT WHEN DRIVING CHIPPER (SEE PAGE 5) AND ENSURE BUCKET IS CLOSED WITH DISCHARGE POINTING AWAY FROM DRIVING POSITION.

ENGINE CONTROLS

The engine controls are in two locations. The engine ignition is on the control panel in the centre of the machine, and the throttle lever is on the bonnet next to the engine emergency stop switch (see parts locator on page 4).

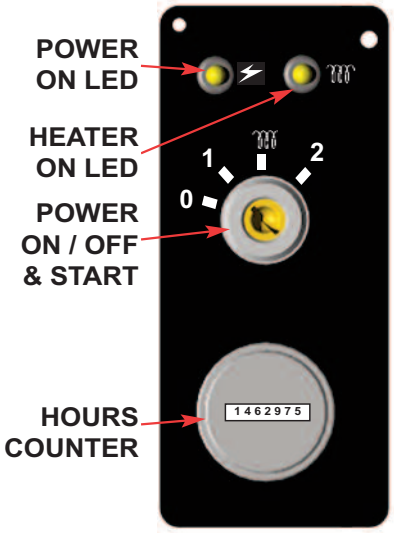

STARTING THE ENGINE

- ENSURE throttle lever is in the slow (tortoise) position.
- INSERT key. Turn to heat.
- HEATER LED comes on.
- WAIT FOR HEATER LED TO GO OUT.
- TURN key to engage starter motor.
- RELEASE key once engine starts.

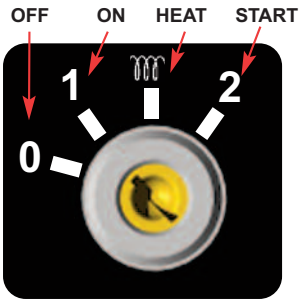

When the emergency stop button is pressed it must be pulled out again and the ignition switch turned off to reset the machine before attempting to restart.

Do not engage starter motor for more than 20 seconds - allow one minute before attempting to start. Investigate reasons for failure to start.

CONTROLLING THE ENGINE SPEED

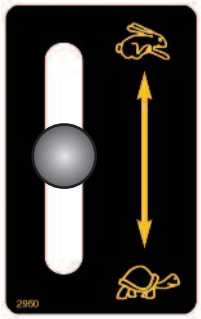

The engine has two throttle settings, idle and fast. These are controlled by the throttle lever on the bonnet. Moving the lever towards the 'Hare' on the pictogram will increase engine speed while moving it towards the 'Tortoise' will decrease the engine. All chipping is performed using fast engine speed. Tracking safely requires the selection of an appropriate engine speed for the terrain.

STOPPING THE ENGINE

- MOVE the throttle lever to the 'Tortoise' to reduce the engine speed to idle.
- LEAVE the engine running for 1 minute.
- TURN the power switch to position 0. The engine should stop after a few seconds.

FUEL LEVEL INDICATOR

The fuel level can be seen through the wall of the fuel tank.

BEFORE USING THE CHIPPER

IT IS ESSENTIAL TO CARRY OUT THE FOLLOWING TESTS to check safety equipment - this sequence of tests will only take a few seconds to carry out. We recommend that these tests are carried out daily. Observing the function as described will confirm that the safety circuits are working correctly. This is also a good opportunity to remind all operators of the control and emergency stop systems.

WITH THE ENGINE RUNNING AT FULL SPEED

1. **PRESS THE GREEN BUTTON**
   THE ROLLERS SHOULD TURN FORWARDS
2. **PRESS THE RED SAFETY BAR**
   THE ROLLERS SHOULD STOP
3. **PRESS THE BLUE BUTTON**
   THE ROLLERS SHOULD TURN BACKWARDS ONLY WHILE THE BUTTON IS PRESSED
4. **PRESS THE GREEN BUTTON AGAIN**
   THE ROLLERS SHOULD TURN FORWARDS
5. **PRESS THE EMERGENCY RED BUTTON**
   THE ROLLERS SHOULD STOP
6. **PRESS THE BLUE BUTTON**
   THE ROLLERS SHOULD NOT TURN
7. **PULL TO RESET THE RED BUTTON**
   THE MACHINE IS READY TO USE

STARTING TO CHIP

WARNING **Do not use or attempt to start the chipper without the protective guarding and discharge unit securely in place. Failure to do so may result in personal injury or loss of life.**

- CHECK that chipper is running smoothly.
- RELEASE the catches on the feed tray and lower. Pull to release the red emergency stop button.
- PRESS the green control button. The rollers will commence turning.
- STAND to one side of the feed funnel.
- PROCEED to feed material into the feed funnel.

CHIPPING

Wood up to 190 mm diameter can be fed into the feed funnel. Put the butt end in first and engage it with the feed rollers. The hydraulic feed rollers will pull the branch into the machine quite quickly. Large diameter material will have its feed rate automatically controlled by the engine management unit.

Sometimes a piece of wood that is a particularly awkward shape is too strong for the feed rollers to break. This will cause the top roller to either bounce up and down on the wood or both rollers to stall. If this occurs, press the BLUE REVERSE button until the material has been released. Pull the material out of the feed funnel and trim it so the chipper can handle it.

Both feed rollers should always turn at the same speed. If one or both rollers stop or suddenly slow down it may be that a piece of wood has become stuck behind one of the rollers. If this occurs, press the BLUE REVERSE button and hold for 2 seconds - then repress GREEN FEED button. This should enable the rollers to free the offending piece of material and continue rotation at the correct speed. If the rollers continue to stall in the 'forward feed' or 'reverse feed' position push the RED STOP BUTTON on bonnet, turn engine off, remove ignition key and investigate.

HYDRAULIC OIL THERMOMETER / OIL LEVEL INDICATOR

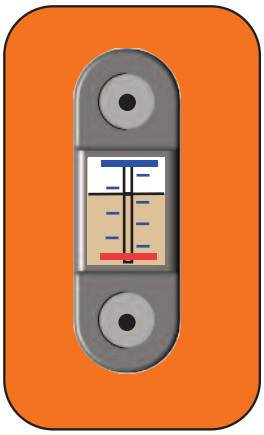

This is situated on the side of the hydraulic oil tank. When the chipper is running, the oil temperature should not exceed 65°C. If it does, stop the machine immediately. Failure to do so may result in damage. Overheating can result from the chipper being worked extremely hard in hot conditions, as the oil is not getting a chance to cool down. Stop the chipper and allow oil to cool before continuing. If the temperature goes above 65°C and the machine is not being worked hard or the air temperature is not particularly high this indicates low oil, a jammed hydraulic motor or valve. Stop immediately and investigate.

When the chipper is on level ground, the oil level should sit between the red line at the bottom of the gauge and the blue line at the top. If this level drops significantly it indicates an oil leak. Stop immediately and investigate.

DISCHARGE CONTROLS

Controlling the discharge is an essential part of safe working.

ROTATION

1. Slacken nut using integral handle.
2. Rotate tube.
3. Retighten nut.

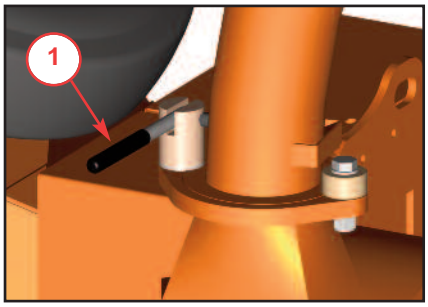

BUCKET ANGLE

4. Adjust the bucket to the desired angle using the handle provided.

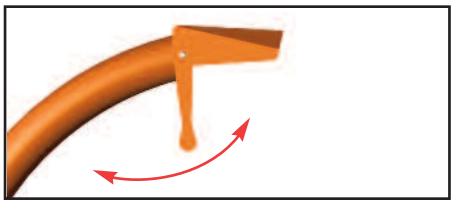

BLOCKAGES

Always be aware that what you are putting into the chipper must come out. If the chips stop coming out of the discharge tube but the chipper is taking material in - STOP IMMEDIATELY. Continuing to feed material into a blocked machine may cause damage and will make it difficult to clear.

If the chipper becomes blocked proceed as follows:

- STOP the engine and remove the keys.
- REMOVE the two rotor housing bolts.
- OPEN the rotor housing fully.
- THE material causing the blockage should fall clear.

WARNING **Do not reach into the rotor housing with unprotected hands. There are sharp blades and any small movement of the rotor may cause serious injury.**

- EMPTY loose debris from inside the rotor housing.
- CHECK that the discharge tube is clear before continuing.
- THE rotor housing does not have to be completely clear to continue.
- SHUT the rotor housing and replace both bolts securely.
- RESTART the engine.

ALLOW machine time to clear excess chips still remaining in rotor housing before you continue feeding brushwood. Feed in a small piece of wood while watching to make sure that it comes out of the discharge. If this does not clear it, repeat the process and carefully inspect the discharge tube to find any obstruction.

NOTE

Continuing to feed the chipper with brushwood once it has become blocked will cause the chipper to compact the chips in the rotor housing and it will be difficult and time consuming to clear.

AVOID THIS SITUATION - WATCH THE DISCHARGE TUBE AT ALL TIMES.

THE FOLLOWING PAGES DETAIL ONLY *BASIC* MAINTENANCE GUIDELINES SPECIFIC TO YOUR CHIPPER.

THIS IS NOT A WORKSHOP MANUAL.

THE FOLLOWING GUIDELINES ARE NOT EXHAUSTIVE AND DO NOT EXTEND TO GENERALLY ACCEPTED STANDARDS OF ENGINEERING/MECHANICAL MAINTENANCE THAT SHOULD BE APPLIED TO ANY PIECE OF MECHANICAL EQUIPMENT AND THE CHASSIS TO WHICH IT IS MOUNTED.

AUTHORISED TIMBERWOLF SERVICE AGENTS ARE FULLY TRAINED IN ALL ASPECTS OF TOTAL SERVICE AND MAINTENANCE OF TIMBERWOLF WOOD CHIPPERS. YOU ARE STRONGLY ADVISED TO TAKE YOUR CHIPPER TO AN AUTHORISED AGENT FOR ALL BUT THE MOST ROUTINE MAINTENANCE AND CHECKS.

TIMBERWOLF ACCEPTS NO RESPONSIBILITY FOR THE FAILURE OF THE OWNER/USER OF TIMBERWOLF CHIPPERS TO RECOGNISE GENERALLY ACCEPTED STANDARDS OF ENGINEERING/MECHANICAL MAINTENANCE AND APPLY THEM THROUGHOUT THE MACHINE.

THE FAILURE TO APPLY GENERALLY ACCEPTED STANDARDS OF MAINTENANCE, OR THE PERFORMANCE OF INAPPROPRIATE MAINTENANCE, MAY INVALIDATE WARRANTY IN WHOLE OR IN PART.

PLEASE REFER TO YOUR AUTHORISED TIMBERWOLF SERVICE AGENT FOR SERVICE AND MAINTENANCE.

SERVICE SCHEDULE

WARNING **Always immobilise the machine by stopping the engine, removing the ignition key and disconnecting the battery before undertaking any maintenance work.**

SERVICE SCHEDULE	Daily Check	50 Hours	100 Hours	500 Hours	1 Year
Check water	✓				
Check engine oil - top up if necessary (10W-30).	✓				
Check for engine oil / hydraulic oil leaks.	✓				
Check fuel level.	✓				
Check feed funnel, feed roller cover, access covers, engine covers and discharge unit are securely fitted.	✓				
Check blades.	✓				
Check radiator is clear.	✓				
Check air intake is clear.	✓				
Clean air filter element.	DEPENDING ON WORKING ENVIRONMENT				
Check for tightness all nuts, bolts and fastenings making sure nothing has worked loose.		✓			
Grease discharge flange.		✓			
Check tension of main drive belts (and tension if necessary).		✓			
Grease the roller box slides.		✓	OR AS REQUIRED - SEE PAGE 21		
Grease the roller spline and bearing.		✓	OR AS REQUIRED - SEE PAGE 21		
Check anvils for wear.		✓			
Check safety bar mechanism.			✓		
Check fuel pipes and clamp bands.			✓		
Check battery electrolyte level.			✓		
Check for loose electrical wiring.			✓		
Replace track drive unit oil.		(1ST TIME)	✓	THEN ✓	*OR* ✓
Replace hydraulic oil filter - every year or 100 hours after service or repair work to the hydraulic system.			✓	*OR*	✓
Replace hydraulic oil.			✓	*OR*	✓
Replace fuel pipes and clamp bands.	REFER TO YOUR ENGINE SUPPLIERS MANUAL				
Check coolant.					
Change engine oil.					
Replace engine oil filter cartridge.					
Check valve clearance.					
Replace anvils when worn.	RETURN TO DEALER FOR ANVIL CHANGE				
Grease tandem pump spline drive					✓

NOTE: Your Timberwolf woodchipper is covered by a full 12 months parts and labour warranty. Subject to correct maintenance and proper machine usage, the bearings are guaranteed for 12 months regardless of hours worked by the machine. In conditions of 'heavy usage' - i.e. in excess of 500 hours per year - it is recommended that the bearings are changed annually to ensure that the machine retains optimum working performance.

SAFE MAINTENANCE

ALWAYS IMMOBILISE THE ENGINE BEFORE UNDERTAKING ANY MAINTENANCE WORK ON THE CHIPPER BY REMOVING THE KEY AND DISCONNECTING THE BATTERY.

- HANDLE blades with extreme caution to avoid injury. Gloves should always be worn when handling the cutter blades.
- THE drive belts should be connected while changing blades, as this will restrict sudden movement of the rotor.
- THE major components of this machine are heavy. Lifting equipment must be used for disassembly.
- CLEAN machines are safer and easier to service.
- AVOID contact with hydraulic oil.

SAFE LIFTING OF THE CHIPPER

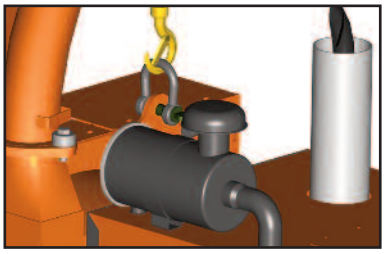

The lifting eye is designed to lift the machine's weight only. Do not use hoist hook directly on the lifting eye, use a correctly rated safety shackle. Inspect the lifting eye prior to each use - DO NOT USE LIFTING EYE IF DAMAGED.

The method of securing the chipper can vary depending on the type of carrier and position of tie down points available on the carrier. Timberwolf recommend where possible to secure machine to carrier using correctly rated ratchet straps over the full length of both rubber tracks.

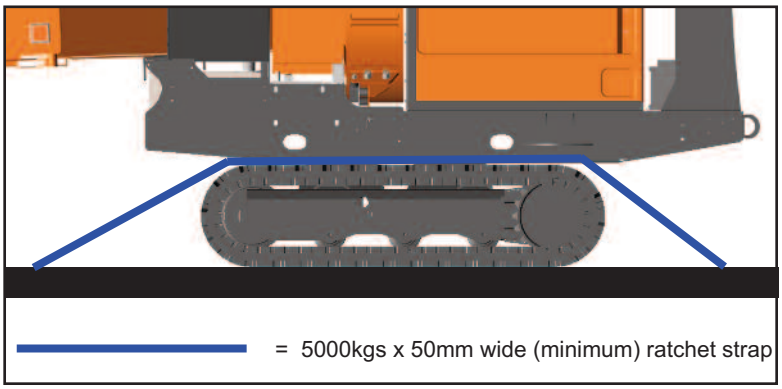

Securing a Timberwolf chipper ready for transport must be carried out by competent qualified personnel. Failure to observe this procedure could result in chassis and/or undercarriage damage.

SPARES

Only fit genuine Timberwolf replacement blades, screws and chipper spares. Failure to do so will result in the invalidation of the warranty and may result in damage to the chipper, personal injury or even loss of life.

CHANGE HYDRAULIC OIL AND FILTER

WARNING **Use plastic gloves to keep oil off skin and dispose of the used oil and filter in an ecologically sound way. The oil and filter should be changed once a year or at any time it becomes contaminated. Before starting check that the chipper is standing level and brush away loose chips.**

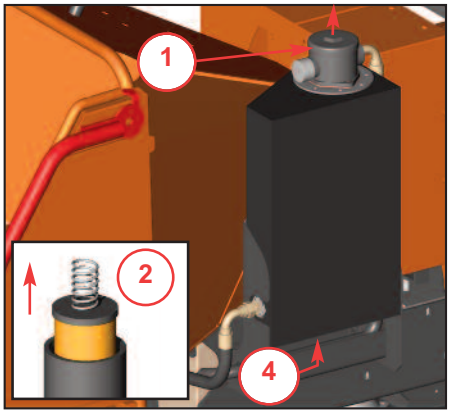

1. Remove the black screw cap from the top of the filter housing.
2. Partially remove filter element from inner cup. Leave filter to drain for 15 minutes.
3. Remove filter element from cup when clear of hydraulic oil.
4. Remove drain plug and drain oil into a suitable container.
5. Replace drain plug.
6. Refill with VG 32 hydraulic oil until the level is between the min and max lines marked on the tank (about 48 litres).
7. Refit the filter cup, install a new filter element and refit the black screw cap to the filter housing, ensuring o-ring remains in place.

BATTERY REMOVAL AND MAINTENANCE

WARNING **Refer to the battery safety section on page 16-17.**

BATTERY REMOVAL

1. Remove the seven M6 bolts securing the driving controls front guard.
2. Remove the two M10 bolts securing the battery clamp.
3. Remove the negative battery lead.
4. Remove the positive battery lead.

BATTERY MAINTENANCE

1. Remove the seven M6 bolts securing the driving controls front guard.
2. The battery can be serviced in this position.

When reinstalling the battery apply a small smear of Vaseline to the terminals.

COPPER EASE SAFETY INFORMATION

Product name: Copper Ease.

Copper Ease contains no hazardous ingredients at or above regulatory disclosure limits, however, safety precautions should be taken when handling (use of oil-resistant gloves and saftey glasses are recommended - respiratory protection is not required). Avoid direct contact with the substance and store in a cool, well ventilated area avoiding sources of ignition, strong oxidising agents and strong acids. Dispose of as normal industial waste (be aware of the possible existance of regional or national regulations regarding disposal), do not discharge into drains or rivers.

In case of fire: in combustion the product emits toxic fumes, extinguish with alcohol or polymer foam, carbon dioxide or dry chemical powder. Wear self-contained breathing apparatus and protective clothing to prevent contact with skin and eyes.

FIRST AID

Skin contact: there may be mild irritation at the site of contact, wash immediately with plenty of soap and water.

Eye contact: there may be irritation and redness, bathe the eye with running water for 15 minutes.

Ingestion: there may be irritation of the throat, do not induce vomiting, wash out mouth with water.

A safety data sheet for this product can be obtained by writing to the manufacturer at the following address: Comma Oil and Chemicals Ltd., Deering Way, Gravesend, Kent DA12 2QX. Tel: 01474 564311, Fax: 01474 333000.

BATTERY SAFETY INFORMATION

WARNING NOTES AND SAFETY REGULATIONS FOR FILLED LEAD-ACID BATTERIES

For safety reasons, wear eye protection when handling a battery.

Keep children away from acid and batteries.

Fires, sparks, naked flames and smoking are prohibited.
-Avoid causing sparks when dealing with cables and electrical equipment, and beware of electrostatic discharges.
-Avoid short circuits.

Explosion hazard:
-A highly explosive oxyhydrogen gas mixture is produced when batteries are charged.

Corrosive hazard:
-Battery acid is highly corrosive, therefore:
-Wear protective gloves and eye protection.
-Do not tilt the battery, acid may escapefrom the vent openings.

First aid:
-Rinse off acid splashed in the eyes immediately for several minutes with clear water! Then consult a doctor immediately.
-Neutralise acid splashes on the skin or clothes immediately with acid neutraliser (soda) or soap suds, and rinse with plenty of water.
-If acid is swallowed, consult a doctor immediately.

Warning notes: The battery case can become brittle, to avoid this:

-Do not store batteries in direct sunlight.
-Discharged batteries may freeze up, therefore store in an area free from frost.

Disposal:
-Dispose of old batteries at an authorised collection point.

-The notes listed under item 1 are to be followed for transport.
-Never dispose of old batteries in household waste.

BATTERY SAFETY INFORMATION...cont.

1. Storage and transport
- Batteries are filled with acid.
- Always store and transport batteries upright and prevent from tilting so that no acid can escape.
- Store in a cool and dry place.
- Do not remove the protective cap from the positive terminal.
- Run a FIFO (first in-first out)warehouse management system.

2. Initial operation
- The batteries are filled with acid at a density of 1.28g/ml during the manufacturing process and are ready for use.
- Recharge in case of insufficient starting power (cf. section 4).

3. Installation in the vehicle and removal from the vehicle
- Switch off the engine and all electrical equipment.
- When removing, disconnect the negative terminal first.
- Avoid short circuits caused by tools, for example.
- Remove any foreign body from the battery tray, and clamp battery tightly after installation.
- Clean the terminals and clamps, and lubricate slightly with battery grease.
- When installing, first connect the positive terminal, and check the terminal clamps for tight fit.
- After having fitted the battery in the vehicle, remove the protective cap from the positive terminal, and place it on the terminal of the replaced battery in order to prevent short circuits and possible sparks.
- Use parts from the replaced battery, such as the terminal covers, elbows, vent pipe connection and terminal holders (where applicable); use available or supplied filler caps.
- Leave at least one vent open, otherwise there is a danger of explosion. This also applies when old batteries are returned.

4. Charging
- Remove the battery from the vehicle; disconnect the lead of the negative terminal first.
- Ensure good ventilation.
- Use suitable direct current chargers only.
- Connect the positive terminal of the battery to the positive output of the charger. Connect the negative terminal accordingly.
- Switch on the charger only after the battery has been connected, and switch off the charger first after charging has been completed.
- Charging current-recommendation: 1/10 ampere of the battery capacity Ah.
- Use a charger with a constant charging voltage of 14.4V for re-charging.
- If the acid temperature rises above 55° Celsuis, stop charging.
- The battery is fully charged when the charging voltage has stopped rising for two hours.

5. Maintenance
- Keep the battery clean and dry.
- Use a moist anti-static cloth only to wipe the battery, otherwise there is a danger of explosion.
- Do not open the battery.
- Recharge in case of insufficient starting power (cf. section 4).

6. Jump Starting
- Use the standardised jumper cable in compliance with DIN 72553 only, and follow the operating instructions.
- Use batteries of the same nominal voltage only.
- Switch off the engines of both vehicles.
- First connect the two positive terminals (1) and (2), then connect the negative terminal of the charged battery (3) to a metal part (4) of the vehicle requiring assistance away from the battery.

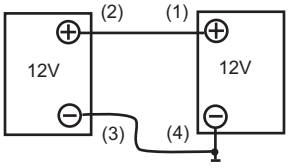

- Start the engine of the vehicle providing assistance, then start the engine of the vehicle requiring assistance for a maximum of 15 seconds.
- Disconnect the cables in reverse sequence (4-3-2-1).

7. Taking the battery out of service
- Charge the battery; store in a cool place or in the vehicle with the negative terminal disconnected.
- Check the battery state of charge at regular intervals, and correct by recharging when necessary (cf. section 4).

CHANGE BLADES

WARNING **Wear riggers gloves for the blade changing operation.**

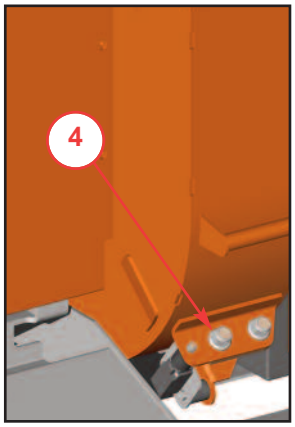

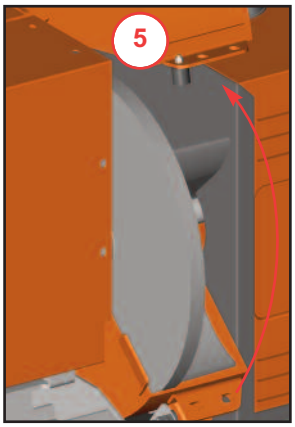

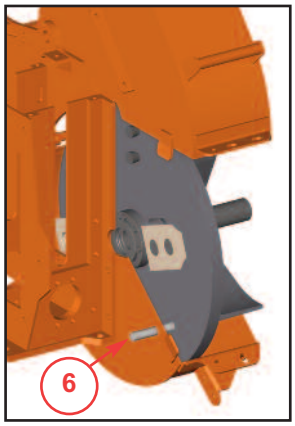

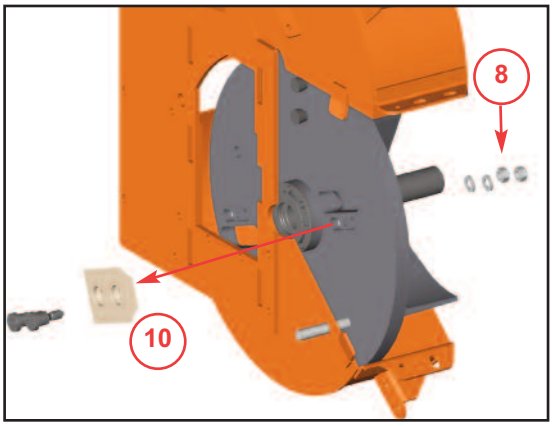

THIS PROCEDURE SHOULD ONLY BE UNDERTAKEN WITH THE DISCHARGE IN PLACE.

1. Turn off the chipper and remove the key.
2. Remove the negative battery lead.
3. Turn the discharge tube to point across the machine.
4. Use a 24mm socket with extension bar to remove the two M16 nuts clamping the rotor housing shut.
5. Carefully lift the rotor housing until its rests on its stop.
6. Using the fan blades turn the rotor to blade change position as shown and insert the locking bar through the rotor housing and rotor.
7. Brush away all dirt and debris from the rotor and blades.
8. With a 24mm spanner/socket undo the two nyloc nuts that are holding the blade in place.
9. Grasp the blade by the flat edges while wearing heavy duty gloves.
10. Withdraw the blade from the rotor.
11. If the blades are being rotated and not replaced, do not remove the blade bolts.
12. If the blades are to be renewed, place the blade on a flat surface and tap the top of the blade bolts with a hammer. The bolts are designed for this. They should loosen from the blade. Withdraw them completely.
13. Clean the back surface of the blade, blade bolts and blade area of the rotor before reseating blades. **The blades must not have any material underneath them when tightened. If they are not flat and tight they will become loose quickly.**
14. Reassemble the blades, bolts, washers and nuts in the order shown in the diagram above. Use only genuine Timberwolf nuts and washers, as they are of a higher grade than normally stocked at fastener factories. Failure to use the appropriate grade nuts or washers may result in damage, injury or death. The use of genuine Timberwolf blades and bolts is recommended.
15. Apply a smear of anti seize compound (copper ease) to the bolt threads and back face of the nuts. Do not apply copper grease onto the counter bore faces of the blades or bolts.
16. **A calibrated torque wrench must be used to tighten the bolts to a torque setting of 125 lbs ft (170 Nm).**
18. Remove the locking bar, rotate rotor to the next blade then repeat steps 8-16.
19. Slowly lower the rotor housing to its original position.
20. Refit the two M16 nuts and tighten to 60 lbs ft (80Nm).
21. Re-attach battery lead.

WARNING **Always sharpen blades on a regular basis. Failure to do so will cause the machine to under perform and will overload engine and bearings causing machine breakdown. Blades must not be sharpened beyond the wear mark (see diagram). Failure to comply with this could result in machine damage, injury or loss of life.**

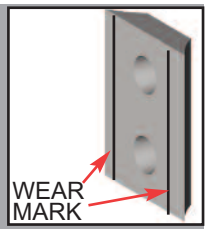

TENSION BELTS

NOTE: There will normally be a rapid drop in tension during run-in period for new belts. When new belts are fitted, check the tension every 2 - 3 hours and adjust until the tension remains constant.
Belt failures due to lack of correct tensioning will not be covered under your Timberwolf warranty.

TENSION DRIVE BELTS

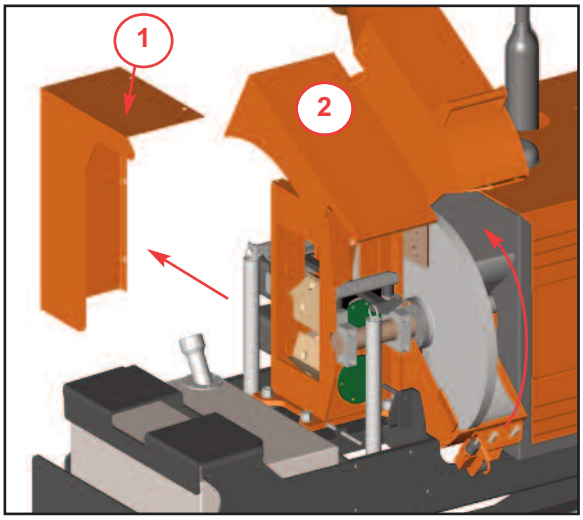

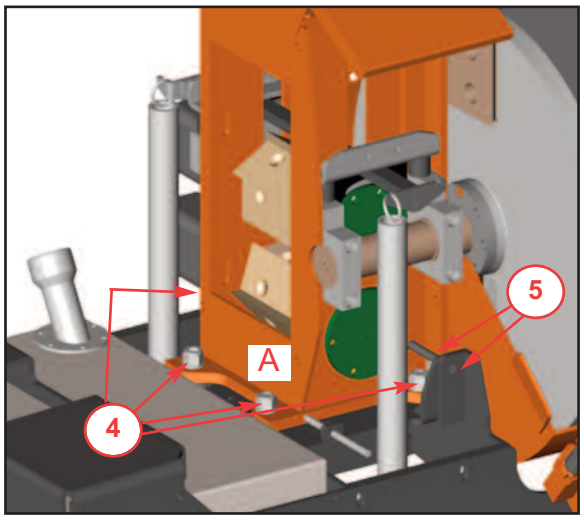

1. Remove the near side roller box guard.
2. Open the rotor housing.
3. Remove off side engine guard panel.
4. Slacken the four 24 mm nuts that retain the roller box (bolt is retained underneath).
5. Slacken the lock nuts on the belt tension bracket.
6. Turn appropriate lock nut to move roller box in desired direction. Take care to keep roller box square. Slightly tighten nut A (see diagram) when tension is near desired amount. Continue to tension belts until correct tension is achieved. For instructions on checking belt tension & correct belt tension values, please refer to the Timberwolf V-Belt Tensioning Data Table (pg. 55).
7. When the belt tension is correct tighten the four 24 mm roller box retaining nuts.
8. Tighten the lock nuts.
9. Grease the roller box slides and rollers.
10. Close the rotor housing and fasten securely.
11. Refit the near side roller box guard.
12. Refit offside engine guard panel.

TENSION HYDRAULIC PUMP BELT

1. Loosen the three outermost M8 nuts and bolts.
2. Pivot pump assembly up or down to achieve the correct belt tension. For instructions on checking belt tension & correct belt tension values, please refer to the Timberwolf V-Belt Tensioning Data Table (pg. 55).
3. Hold assembly at this position while tightening the three M8 nuts and bolts.

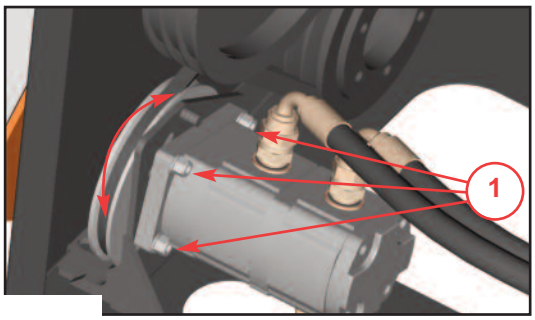

CHECK HOSES

All the hydraulic hoses should be regularly inspected for chafing and leaks. The hydraulic system is pressurized to 150 Bar (2175 PSI) and thus the equipment containing it must be kept in good condition.

Identify the hoses that run to the top motor. These have the highest chance of damage as they are constantly moving. If any hydraulic components are changed new seals should be installed during reassembly. Fittings should then be retightened.

GREASE THE ROLLER BOX SLIDES

NOTE: This should be done every 50 hours. In dirty or dusty conditions or during periods of hard work it should be done more frequently. If the slides become dry the top roller will tend to hang up and the pulling-in power of the rollers will be much reduced. Excessive wear will ensue.

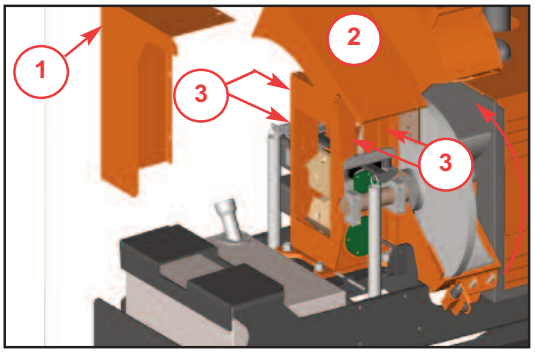

1. Remove the near side roller box guard.
2. Open the rotor housing.
3. Apply multipurpose grease directly to the slide surfaces indicated. **DO NOT USE GRAPHITE BASED GREASE.**
4. Close the rotor housing.
5. Refit the near side roller box guard.

GREASE THE ROLLER SPLINE AND BEARING

NOTE: This should be done regularly. In dirty and dusty conditions or during periods of hard work it should be weekly. If the bearings and splines are allowed to run dry premature wear will occur resulting in a breakdown and the need for replacement parts. This failure is not warranty. Early signs of insufficient grease includes squeaking or knocking rollers.

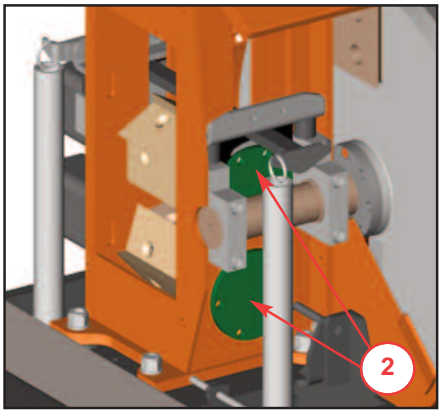

1. Open the rotor housing.
2. Locate two grease nipples; one in the centre of each roller shaft.
3. Use a pump action grease gun to apply a generous amount of grease to each roller drive. **DO NOT USE GRAPHITE BASED GREASE.**
4. Close the rotor housing.
5. To penetrate all the bearing surfaces thoroughly, start the machine and operate the rollers for 20 seconds. Switch off the machine. Repeat this greasing/running procedure a further 3 times.

GREASE THE DISCHARGE FLANGE

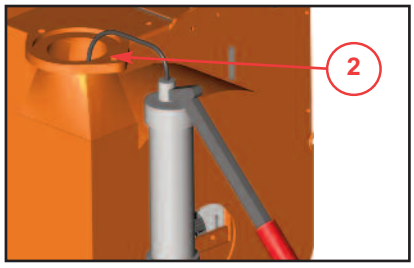

1. Remove the discharge tube.
2. Apply multipurpose grease to surface shown.
3. Refit discharge tube.

GREASING ROTOR BEARINGS

Both front and rear bearings are sealed and do not need greasing.

ENGINE SERVICING

All engine servicing must be performed in accordance with the Engine Manufacturer's Handbook provided with the machine. **FAILURE TO ADHERE TO THIS MAY INVALIDATE WARRANTY AND/OR SHORTEN ENGINE LIFE.**

CHECK FITTINGS

The TW 190TVGTR is subject to large vibrations during the normal course of operation. Consequently there is always a possibility that nuts and bolts will work themselves loose. It is important that periodic checks are made to ensure the security of all fasteners. ***Uncalibrated torque wrenches can be inaccurate by as much as 25%. It is therefore essential that a calibrated torque wrench is used to achieve the tightening torques listed below.***

	Size	Pitch	Head	Torque lbs.ft	Torque Nm
Blade Bolts	M16	Fine	24 mm Hex	125	170
Anvil Retaining Bolts	M12	Standard	10 mm Allen Key	65	88
Rotor Housing Clamp Bolts	M16	Standard	24 mm Hex	60	80
Hyd Motor Retaining Cap Screws	M12	Standard	10 mm Allen Key	60	81
Roller Box Retaining Bolts	M16	Standard	24 mm Hex	105	140
Rotor Main Shaft Retaining Screws	M12	Standard	10 mm Allen Key	105	140
Rotor Stub Shaft Retaining Screws	M10	Fine	8 mm Allen Key	45	61
Large Rotor Shaft Retaining Nut	M39	Nut	60 mm Hex	450	610
Funnel Retaining Nuts	M12	Standard	19 mm Hex	60	80
General	M8	Standard	13 mm Hex	17	23
General	M10	Standard	17 mm Hex	34	46
General	M12	Standard	19 mm Hex	60	80
Drain Bung in Fuel Tank	3/8” BSP	-	22 mm Hex	25	33.8
Fuel Take-off in Fuel Tank	3/4” BSP	-	32 mm Hex	40	54.2

TRACK BASE MAINTENANCE

SAFE MAINTENANCE

- Solidly support the under carriage if it needs to be lifted up for maintenance.
- Hydraulic systems may get very hot after working.
- Keep all components in good condition as they are exposed to high pressures.
- Immediately repair damage and replace worn or broken items.
- Keep the tracks clean, removing excess oil, grease and dirt.
- Check for oil leaks and damaged hoses.
- Only use recommended lubricants. Do not mix different brands.
- Keep track stretcher grease nipples clean.

Maintenance intervals are only guidelines. The amount of times maintenance is conducted should be increased beyond recommended guidelines if severe conditions are encountered.

REPLACEMENT OF OIL IN THE TRACK DRIVE UNIT

To fill with oil, track the machine until the gearbox casing is level with a plug positioned at 12 o’clock as shown. Unscrew the two plugs and fill from the upper hole until oil reaches the level of the lower hole.

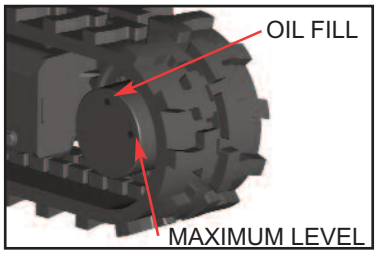

NOTE - Ensure the correct grade of oil is used:
Gear Oil EP80W-90 GL5

DRAINING THE OIL IN THE TRACK DRIVE UNIT

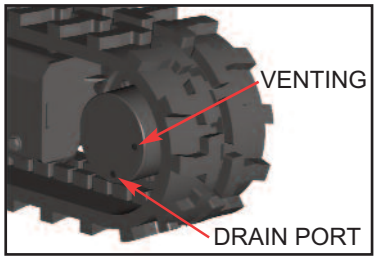

To drain the oil, track the machine until a plug is at 6 o’clock as shown. Unscrew both plugs and allow oil to discharge into a suitable container. Dispose of waste oil in a safe and approved way.

REDUCTION UNIT OIL TYPES

We recommend, for track drive gearboxes, using gear oils with E>P. additives and viscosity to SAE 80W/90 or ISO VG 150. Continuous duty temperature must not exceed 90°C.

CHECKING THE TRACK TENSION

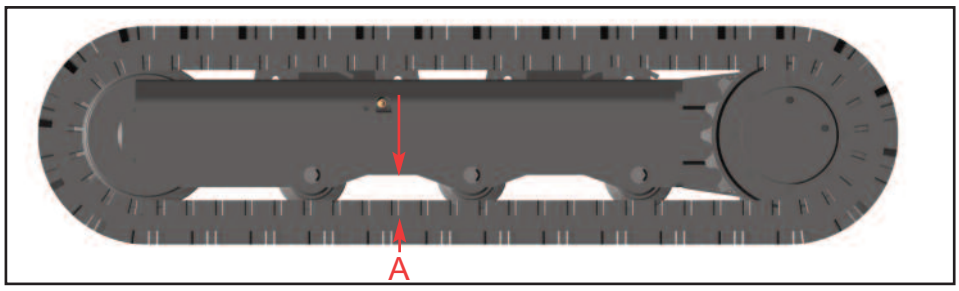

1. Stop your machine on a flat and solid surface.
2. Lift it in safe conditions and put stable supports under the undercarriage frame to properly support it.
3. Measure distance A at the central roller of the undercarriage from the bottom of the roller to the rigid inside surface of the rubber track. Track tension is normal if dimension A is between 70 and 75 mm.
4. Adjust tension as described in the following paragraph if track tension does not comply with these dimensions (loose or too tight).

TRACK LOOSENING/TIGHTENING PROCEDURES

Track tension is maintained by grease in the adjuster unit. Adding more grease will increase track tension, removing grease will decrease it.

The grease contained in the hydraulic track tensioner ram is pressurized. Never release grease nipple (No. 1, Fig. 1) for more than necessary to slowly release grease to a maximum of five turns. If the valve is loosened too much you risk expelling grease under pressure and possible injury to the machine operator. Remove gravel or mud when they are jammed between the sprocket and the track link before loosening the track.

1. Locate access hole in side frame (fig. 1) to access the adjustment system.

2. To loosen the track turn the grease nipple counter-clockwise slowly, the grease should begin to be expelled after approximately two turns.

3. If grease does not start to drain out then slowly rotate the track forward and reverse to free adjuster mechanism - grease may then be expelled under pressure as track tension is relieved.

Fig. 1

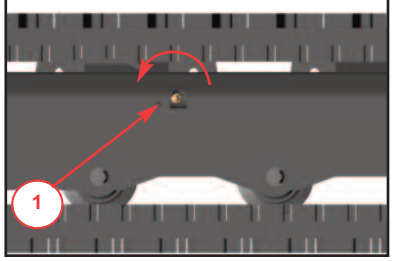

4. When you have obtained correct track tension then turn valve clockwise and tighten it. Clean all traces of extruded grease.

5. To stretch the track connect a grease gun to grease nipple and add grease until track tension falls within specified values.

WARNING

It is not normal for the track to remain too tight after turning the grease nipple counter-clockwise or for it to remain loose after introducing grease into the grease nipple. Never try to remove the tracks or disassemble the track-stretching cylinder since pressure of the grease inside the track is dangerous.

CHECKING THE RUBBER TRACKS

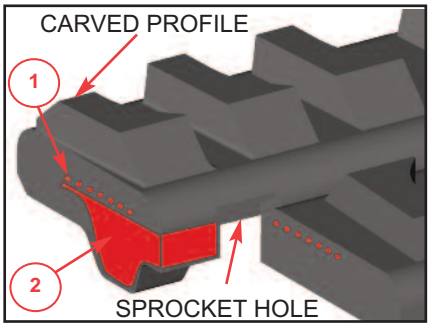

The structure of the rubber track is shown in this diagram. The steel cables (1) and metal core (2) are embedded in the rubber.

There are many ways in which rubber tracks may be damaged. Some of these are terminal for the tracks, others are only cosmetic.

BREAKAGES OF STEEL CABLES AND METAL CORES.

Excess track tension can cause steel cables to break. Excess tension may be caused by;

- Stones or foreign matter accumulating between the track and the undercarriage frame.
- The track slipping off its guide system.
- Extreme friction such as rapid changes in direction.
- Improper contact between track and sprocket.
- Operation on sandy terrain.

FATIGUE CRACKS AND ABRASION.

Cracks at the base of the carved profiles are caused by rubber fatigue due to bending.

Cracks and bends on the edge of the rubber are caused by manoeuvring the track on concrete edges and curbs.

Cracks and abrasions in the rubber on the guide roller paths are caused by compression fatigue of the rubber due to the weight of the wheel combined with operation on sandy terrain or repeated sudden changes in direction.

Abrasion of the carved profile may be caused, in particular, by rotation on concrete or gravel surfaces or hard surfaces.

Cracks on the outside surface of the track are often due to contact with gravel, sharp stones and sharp materials such as sheet metal, nails and glass.

Cracks on the inside surface of the circumference and on the edge of the rubber are caused by contact between track and the undercarriage structure or with sharp concrete edges.

These methods of damage are progressive. The track can continue to be used until wear exposes the metal cores. If this exposure extends for more than half of the circumference of the track then it is time to replace the track, even though it can still be used.

REMOVING THE RUBBER TRACKS

Remove gravel or mud when they are jammed between the sprocket and the track link before loosening the track.

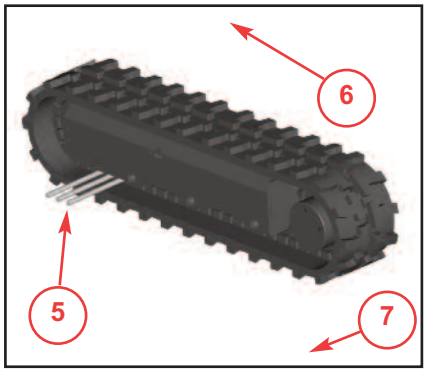

1. Stop your machine on a solid and level surface. Lift it up and support it in safe conditions.
2. Locate access holes in side frame to access to the adjustment system (Fig. 1, page 23).
3. To loosen a track turn the grease nipple counter-clockwise slowly then the grease should begin to be expelled after approximately 2 turns.
4. If grease does not start to drain out then slowly rotate the track forward and reverse to free adjuster mechanism.
5. Insert three steel tubes inside the track in the space between the rollers.
6. Rotate the driving gear in reverse so that the steel tubes proceed with the track and engage in the track-stretching wheel.
7. Exercise force sideways to slide the track and lift it off the track-stretching wheel.

WARNING **The grease contained in the hydraulic tensioner is under pressure. Never loosen the grease nipple for more than 5 turns. If the grease nipple is loosened too much then pressurized grease may exit and cause injury to the machine operator.**

INSTALLING THE RUBBER TRACKS

WARNING **Make sure that you are always in safe conditions with the machine lifted to perform the operation for track installing.**

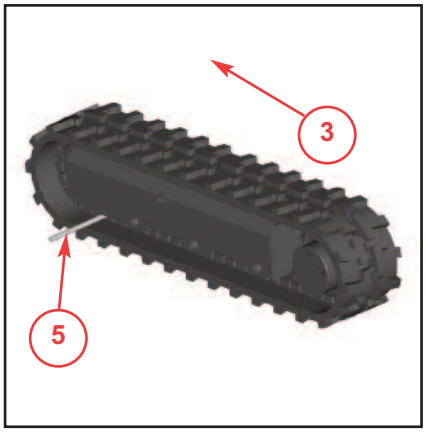

1. Check that the grease contained in the hydraulic cylinder has been removed.
2. Mesh the track links in the sprocket and place the other end of the track on the track-stretching wheel.
3. Rotate the driving gear in reverse and pull the track soles inside the frame.
4. Position the track using a steel tube and turn the driving gear again.
5. Make sure track links mesh correctly in the sprocket and in the track stretching wheel.
6. Adjust track tension (see track loosening procedures on page 23).
7. Set the tracked undercarriage on the ground.

CHECKING SPROCKET WEAR

Measuring wear on sprocket and driving gear teeth is one of the most difficult measurements to be done. You must always consider the point where wear is greatest.

There should always be enough tooth left on the sprocket to engage fully with the rubber track. When the sprocket meshing distance is reduced significantly the sprocket should be changed.

ENTEC INDUSTRIES LTD 12 MONTH CHIPPER WARRANTY

WARRANTY PERIOD

The warranty period for the woodchipper commences on the date of sale to the first end user and continues for a period of 12 months. This guarantee is to the first end user only and is not transferable except when an authorised Timberwolf Dealer has a woodchipper registered with Entec Industries Ltd as a hire chipper or long term demonstrator – in these situations they are duly authorised to transfer any remaining warranty period to their first end user. Any warranty offered by the Timberwolf Dealer beyond the original 12 month period will be wholly covered by said Dealer.

LIABILITY

Our obligation under this warranty is limited to repair at Entec Industries Ltd premises or at our option an Entec Industries Ltd approved Timberwolf dealer. No liability will be accepted for special, indirect, incidental, or consequential loss or damages of any kind.

WARRANTY STATEMENT

Entec Industries Ltd warrants to the first end user that;

- Your woodchipper shall be designed, built and equipped, at the point of sale, to meet all current applicable regulations.
- Your chipper shall be free from manufacturing defects both in materials and workmanship in normal service for the period mentioned above.

Warranty will not apply to a failure where normal use has exhausted the life of a component.

Engine units are covered independently by their respective manufacturer warranties.

OWNERS WARRANTY RESPONSIBILITIES

As the owner of an Entec Industries Ltd woodchipper you are responsible for the following;

- Operation of the woodchipper in accordance with the Entec Industries Ltd instruction manual.
- Performance of the required maintenance listed in your Entec Industries Ltd instruction manual.
- In the event of a failure the Entec Industries Ltd authorised Timberwolf dealer is to be notified within 10 days of failure and the equipment is to be made available for unmolested inspection by the dealer technician.

WARRANTY RESTRICTIONS

The Entec Industries Ltd warranty is restricted to the first end user only and is not transferable except when an authorised Timberwolf Dealer has a woodchipper registered with Entec Industries Ltd as a hire chipper or long term demonstrator – in these situations they are duly authorised to transfer any remaining warranty period to their first end user.

The Entec Industries Ltd warranty may be invalidated if any of the following apply;

- The failed parts or assembly is interfered with in any way.
- Normal maintenance has not been performed.
- Incorrect reassembly of components.
- The machine has undergone modifications not approved in writing by Entec Industries Ltd.
- In the case of tractor driven equipment, use has been on an unapproved tractor.
- Conditions of use can be deemed abnormal.
- The machine has been used to perform tasks contrary to those stated in the Entec Industries Ltd instruction manual.

WARRANTY SERVICE

To obtain warranty service please contact your nearest Entec Industries Ltd approved Timberwolf dealer. To obtain details of the nearest facility please contact Entec Industries Ltd at the address on the front of this manual.

These warranty terms are in addition to and not in substitution for and do not affect any right and remedies which an owner might have under statute or at common law against the seller of the goods under the contract by which the owner acquired the goods.

CERTIFICATE OF CONFORMITY

Environmental Manufacturing LLP

Entec House,
Tomo Industrial Estate,
Stowmarket,
Suffolk IP14 5AY
Tel: 01449 765800 Fax: 01449 765801

E C Declaration of Conformity

CE

Environmental Manufacturing LLP as the designer and manufacturer, certifies that the machine stipulated below complies with all the relevant provisions of the:

Machinery Directive; 2006/42/EC
(& other relevant directives)

and the National Laws and Regulations adopting these directives.

Designer/Manufacturer	:	Environmental Manufacturing LLP
Description of Machinery	:	Self-powered, track mounted, gradient adjustable machine intended to chip up tree waste prior to disposal.
Model	:	TW 190 TVGTR
Serial No.		*Serial Manufacture*

BSI Transposed Harmonised Standards applied: (including parts/clauses of):
BS EN 12100-1: 2010 Safety of Machinery- Basic concepts, BS EN 13857-1: 2008 Safety of Machinery-Safety distances to danger zones, BS EN 60204-1: 2006 +A1 2009 Safe electrical practices, BS EN 13732-1:2008 Safety of Machinery – Temperatures of touchable surfaces, BS EN 13849-1: 2008 – Safety of Machinery – Safety related parts of control systems, BS13850:2008 safety of Machinery Emergency stop BS EN 982: 1996 + A1 2005 – Safety of Machinery – Hydraulics, BS EN 1088: 1995 + A2 2008 – Safety of Machinery – Interlocking devices, BS EN 13525: 2005 + A2 2009 – Forestry Machinery – Wood chippers – Safety. BS EN 953:1997+A1:2009

"Responsible" Person empowered to sign: _____ Mr. Jeff Haines
Position in Company: Technical Director

Date: 31 July 2014

IDENTIFICATION PLATE

Decal	Description	Decal	Description
616 	Hot exhaust	2440 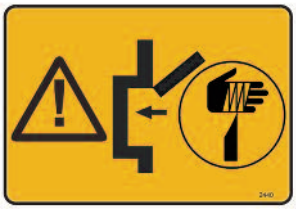	Danger - beware of sharp blades when the rotor housing is open.
617 	High velocity discharge - keep clear	2800 2801 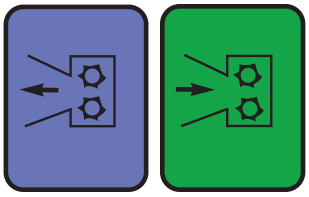	Reverse feed Forward feed
670   4099	Personal Protective Equipment required Danger. Rotating blades. Keep hands and feet out.	P1301 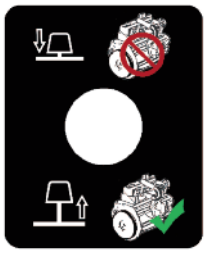	Push to stop, Pull to reset. (engine)
1661 	Read the instruction manual for greasing and maintenance information	18648 	Danger Never position any part of your body under the machine. serious injury may occur.
1662 	The instruction manual with this machine contains important operating, maintenance and health and safety information. Failure to follow the information contained in the instruction manual may lead to death or serious injury.	2949 	**Lifting eye is designed to lift the machine's weight only.** Do not use hoist hook directly on lifting eye. Use correctly rated safety shackle only through lifting eye. Lifting eye to be inspected every 6 months or before each use. Always visually inspect lifting eye prior to each use. Do not use lifting eye if damaged
1745 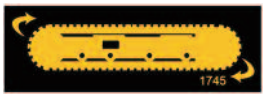  18650	Track Lift	3022 	Clean under blades before refitting or turning. Failure to do so may result in blade(s) coming loose and damage being caused to the rotor housing.
 P1811 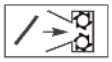 P1810	Engine safety Forward latch	19517 	Warning. Do not engage starter motor for more than 20 seconds. Allow one minute before attempting to start. Investigate reasons for failure to start. Excessive cranking will result in starter motor failure. This will not be covered under warranty.

Decal	Description	Decal	Description
P637 	Danger. Do not operate without this cover in place.	P653 	Danger. Rotating blades inside. Stop engine and remove key before removing discharge unit.
P652 	Caution. Do not put road sweepings in machine as grit will damage blades.	P654 	Caution. When transporting, discharge clamps may work loose.Check frequently.
P655 	Caution. Avoid standing directly in front of feed funnel to reduce exposure to noise, dust and risk from ejected particles.	P656 	Danger. Do not use this machine without the discharge unit fitted. failure to comply may result in serious inury or damage.
18900 	Push to track Pull to chip	18653 	Close bucket and point discharge away from driving position. Protective equipment must be worn when driving machine.
1399  P691 	Push to stop Do not pull here	18393 	New drive belts need re-tensioning. When new belts are fitted check tension every 2-3 hours & adjust until tension remains constant.
P650 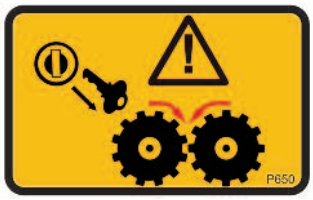	Danger. Autofeed system fitted. Rollers may turn without warning! When the engine is switched off the rollers will turn during the run down period	19518 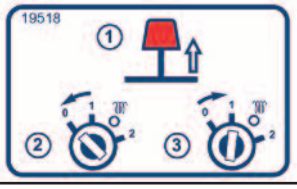	When the emergency stop button is pressed it must be pulled out again and the ignition switch turned off to reset the machine before attempting to restart.
18647 	Appropriate supports must be used while servicing the jacking legs		

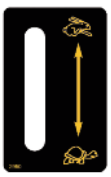


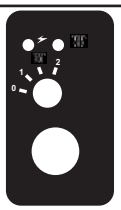


2998	3004	2950	1363	1746	2951	18649	18651

TIMBERWOLF
TW 190TVGTR

P*153	2995

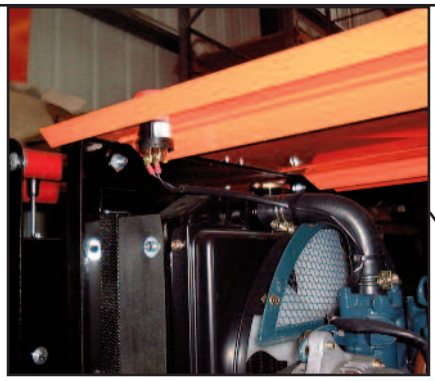

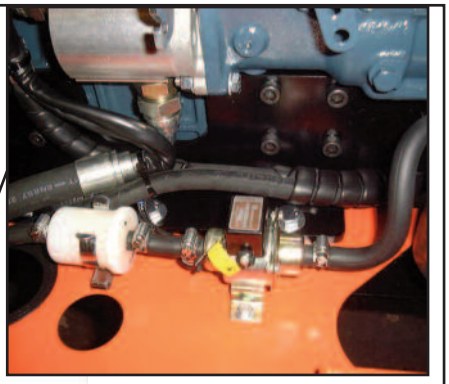

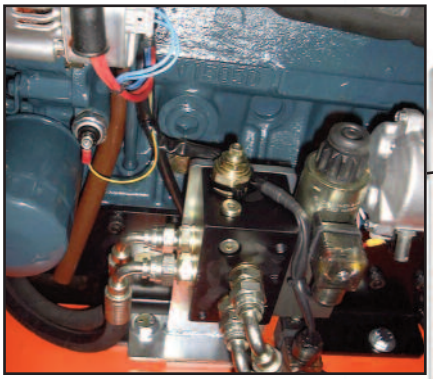

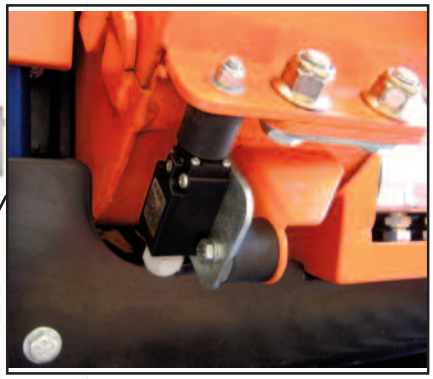

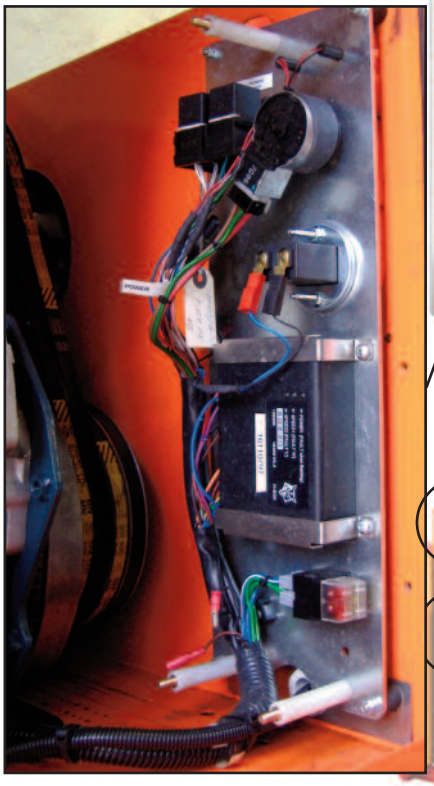

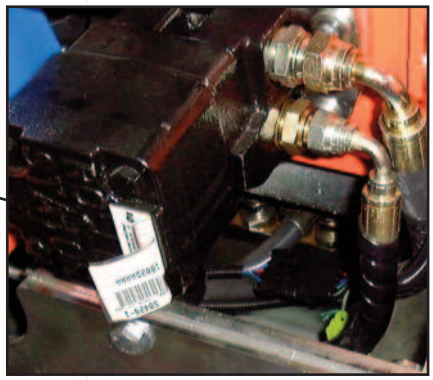

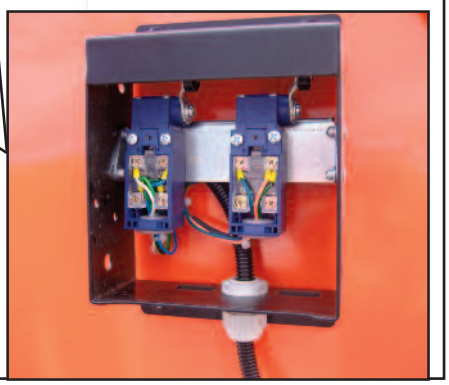

Date Last Modified: 18th June 09

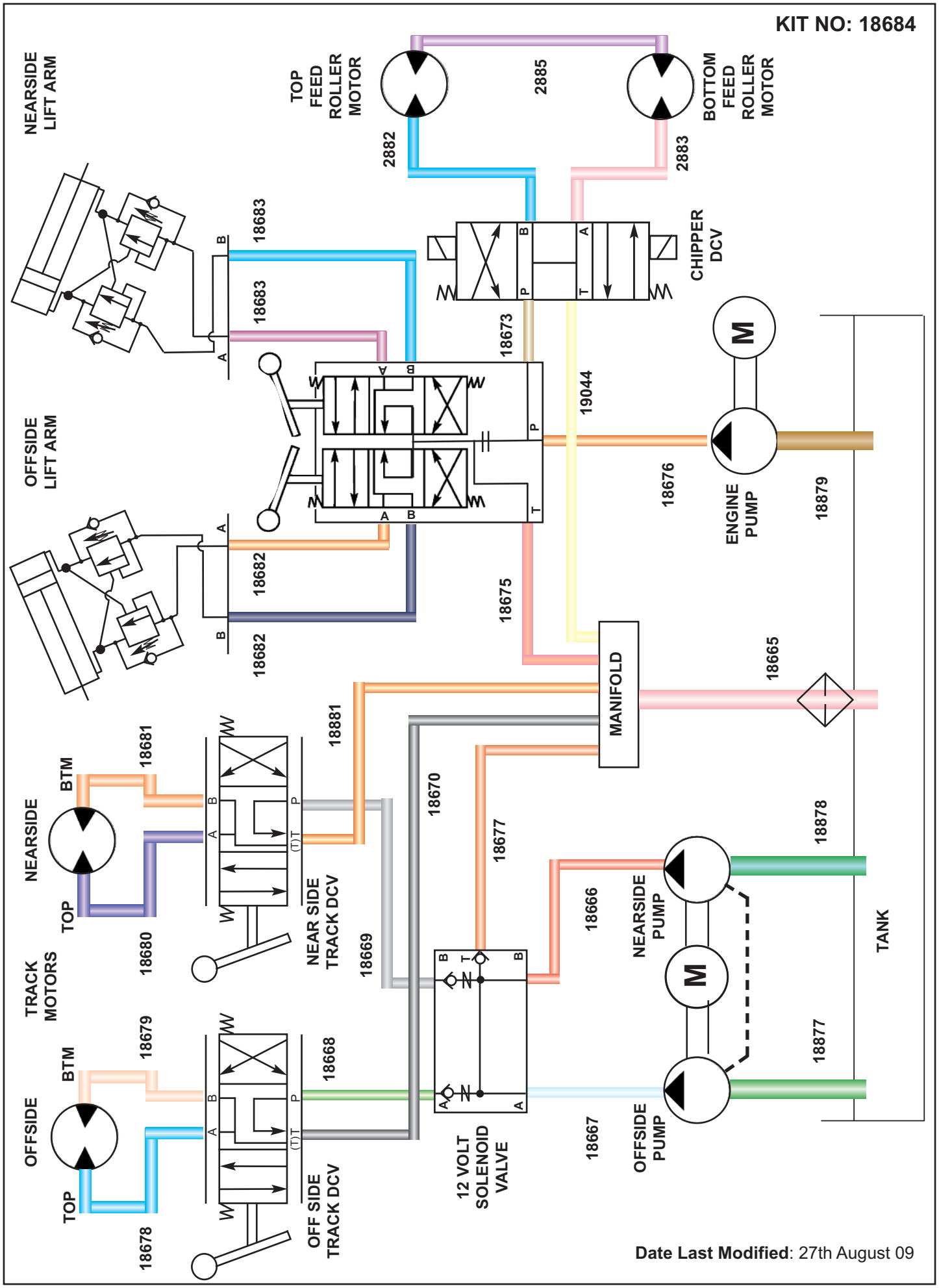
KIT NO: 18684
NEARSIDE LIFT ARM
OFFSIDE LIFT ARM
TOP FEED ROLLER MOTOR
BOTTOM FEED ROLLER MOTOR
2882
2885
2883
CHIPPER DCV
18683
18683
18673
19044
18676
ENGINE PUMP
18879
18682
18682
18675
MANIFOLD
18665
TRACK MOTORS
NEARSIDE
BTM
TOP
18681
18680
18881
NEAR SIDE TRACK DCV
18670
18677
18669
18666
NEARSIDE PUMP
18878
TANK
OFFSIDE
BTM
TOP
18679
18678
18668
OFF SIDE TRACK DCV
12 VOLT SOLENOID VALVE
18667
OFFSIDE PUMP
18877
Date Last Modified: 27th August 09

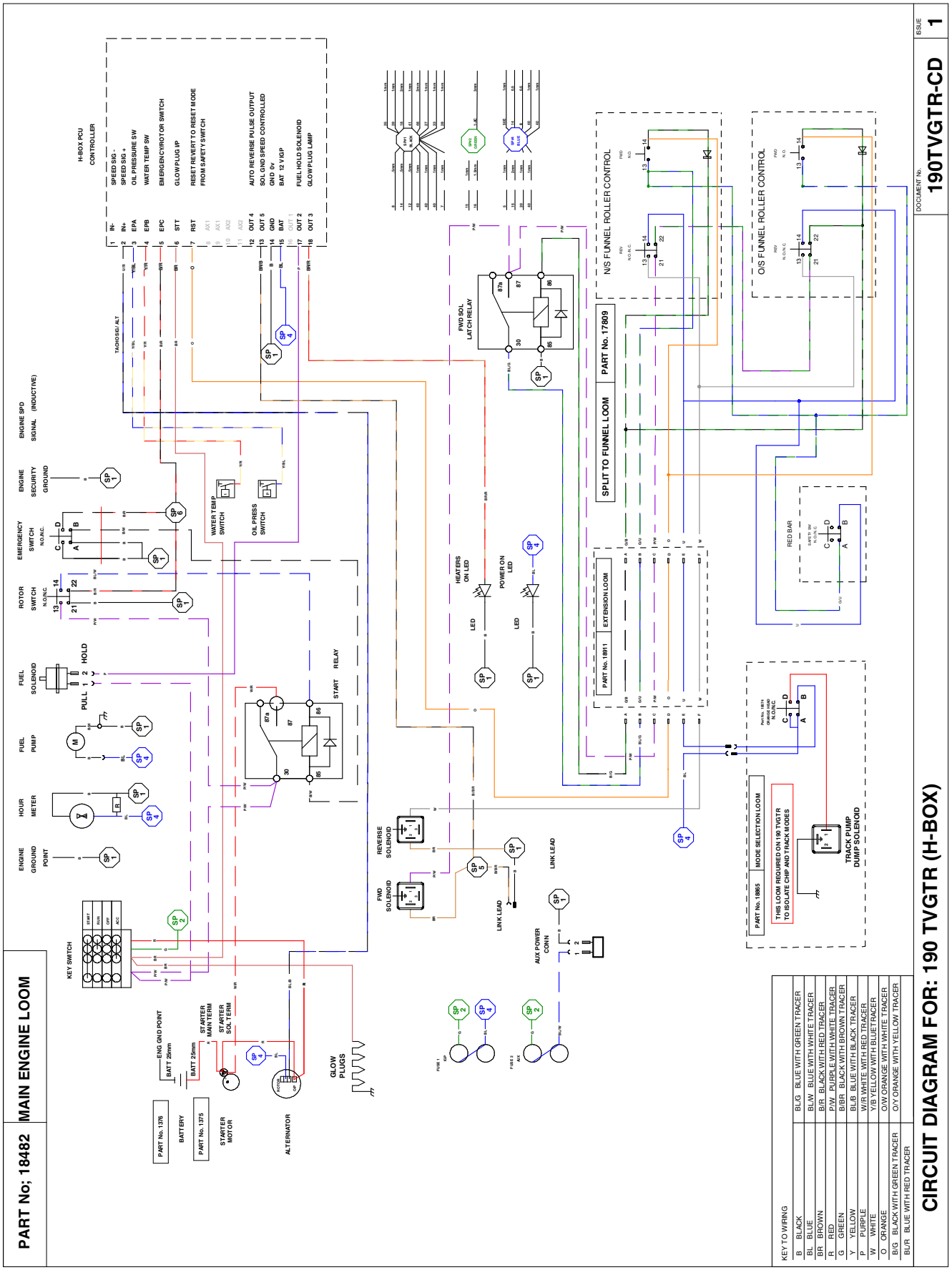
PART No; 18482
MAIN ENGINE LOOM
CIRCUIT DIAGRAM FOR: 190 TVGTR (H-BOX)
DOCUMENT No.
190TVGTR-CD
ISSUE
1
H-BOX PCU CONTROLLER
SPEED SIG -
SPEED SIG +
OIL PRESSURE SW
WATER TEMP SW
EMERGENCY/ROTOR SWITCH
GLOW PLUG VP
RESET REVERT TO RESET MODE FROM SAFETY SWITCH
AUTO REVERSE PULSE OUTPUT
SOL GND SPEED CONTROLLED
GND 0v
BAT 12 VGP
FUEL HOLD SOLENOID
GLOW PLUG LAMP
N/S FUNNEL ROLLER CONTROL
O/S FUNNEL ROLLER CONTROL
SPLIT TO FUNNEL LOOM
PART No. 17809
EXTENSION LOOM
PART No. 18911
MODE SELECTION LOOM
PART No. 18855
THIS LOOM REQUIRED ON 190 TVGTR TO ISOLATE CHIP AND TRACK MODES
TRACK PUMP DUMP SOLENOID
RED BAR
FWD SOL LATCH RELAY
HEATERS ON LED
POWER ON LED
START RELAY
WATER TEMP SWITCH
OIL PRESS SWITCH
ENGINE SPD SIGNAL (INDUCTIVE)
ENGINE SECURITY GROUND
EMERGENCY SWITCH
ROTOR SWITCH
FUEL SOLENOID
FUEL PUMP
HOUR METER
ENGINE GROUND POINT
KEY SWITCH
REVERSE SOLENOID
FWD SOLENOID
LINK LEAD
AUX POWER CONN
ENG GND POINT
BATT 25mm
STARTER MAIN TERM
STARTER SOL TERM
GLOW PLUGS
PART No. 1376
BATTERY
PART No. 1375
STARTER MOTOR
ALTERNATOR
KEY TO WIRING
B BLACK
BL BLUE
BR BROWN
R RED
G GREEN
Y YELLOW
P PURPLE
W WHITE
O ORANGE
B/G BLACK WITH GREEN TRACER
BU/R BLUE WITH RED TRACER
BL/G BLUE WITH GREEN TRACER
BL/W BLUE WITH WHITE TRACER
B/R BLACK WITH RED TRACER
P/W PURPLE WITH WHITE TRACER
B/BR BLACK WITH BROWN TRACER
BL/B BLUE WITH BLACK TRACER
W/R WHITE WITH RED TRACER
Y/B YELLOW WITH BLUE TRACER
O/W ORANGE WITH WHITE TRACER
O/Y ORANGE WITH YELLOW TRACER

PARTS LISTS

The following illustrations are for parts identification only. The removal or fitting of these parts may cause a hazard and should only be carried out by trained personnel.

blank page

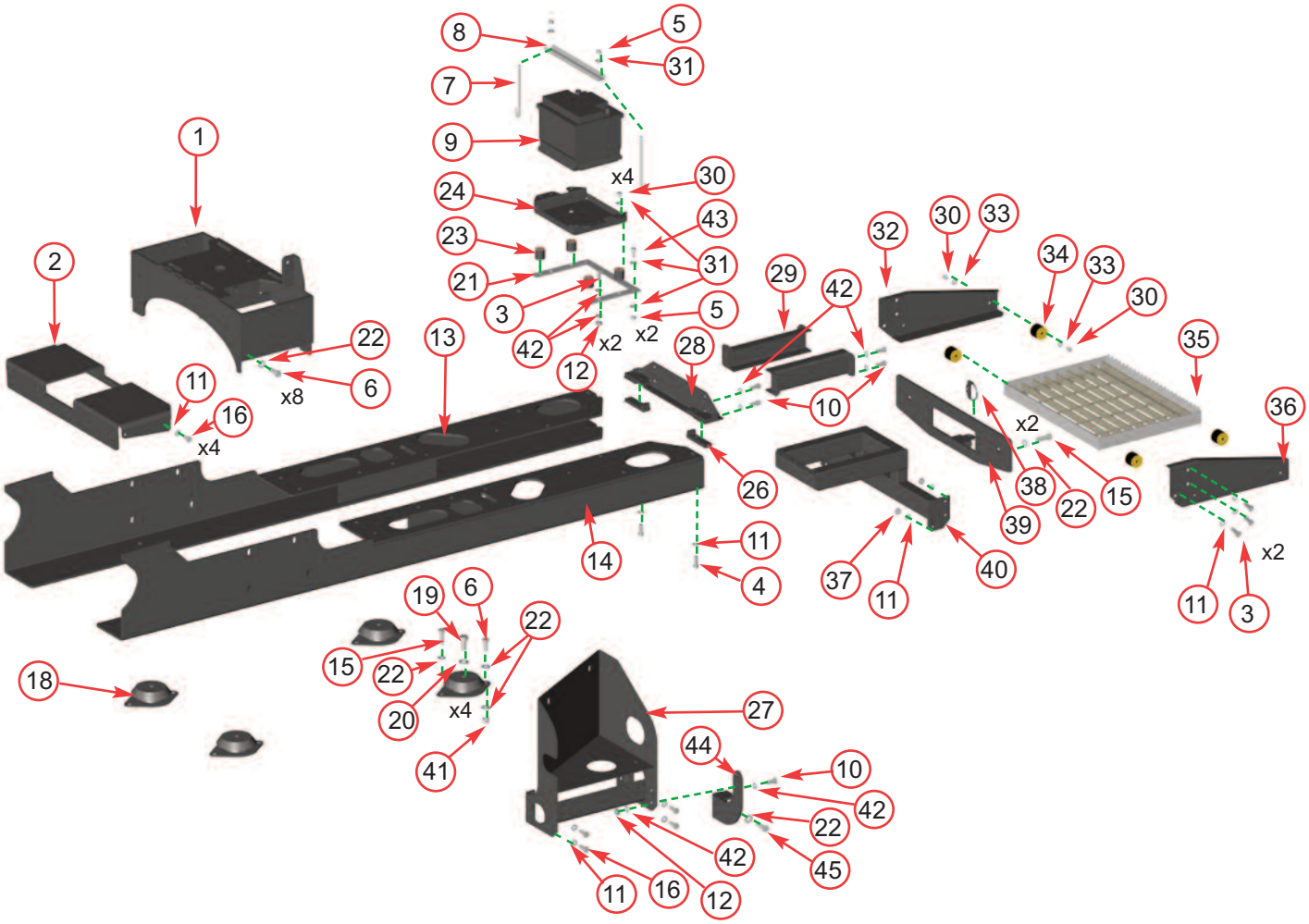

Item	Part No	Part Name	Q'ty
1	2905FB	Roller Box Mounting Brkt	1
2	2903FB	Funnel Support	1
3	0382	M10/30 Bolt	10
4	1812	M10/35 Bolt	2
5	0479	M8 P Nyloc Nut	4
6	0429	M12/35 Bolt	8
7	18041	M8 x 170 Hook Bolt	2
8	18040FS	Battery Clamp	1
9	4210	Battery	1
10	0360	M10/25 Bolt	10
11	0701	M10 A Washer	28
12	0052	M10 T Nyloc Nut	6
13	2904FB	Chassis Beam O/S	1
14	2906FB	Chassis Beam N/S	1
15	0321	M12/30 Bolt	6
16	0878	M10/20 Bolt	8
17	1869FB	Bracket Track Mount Adapter	1
18	1795	Heavy-Duty AV Mount	4
19	1628	M16/35 Bolt	4
20	1143	M16 A Washer	4
21	18038FS	Battery Base Plate	1
22	0704	M12 C Washer	31
23	1644	AV Mount	4

Item	Part No	Part Name	Q'ty
24	18039FB	Battery Tray	1
25	2799FB	Joining Bridge	2
26	18636FB	Platform Clamp	2
27	18843FB	Oil Tank Bracket	1
28	18637FB	Platform Support	1
29	18528FB	Platform Channel	2
30	18037	M8/12 Bolt	8
31	0712	M8 C Washer	10
32	18530FB	N/S Platform Sideplate	1
33	0711	M8 A Washer	8
34	1868	AV Mount	4
35	1861	Foot Plate	1
36	18531FB	O/S Platform Sideplate	1
37	4345	M10 P Nyloc Nut	8
38	0942	Lynch Pin	1
39	18635FB	Front Bracket	1
40	18529FB	Platform Frame	1
41	0644	M12 P Nyloc Nut	4
42	0839	M10 C Washer	14
43	0350	M8/25 Bolt	2
44	19516	Support Brace for Oil Tank	1
45	0431	M12/40 Bolt	3

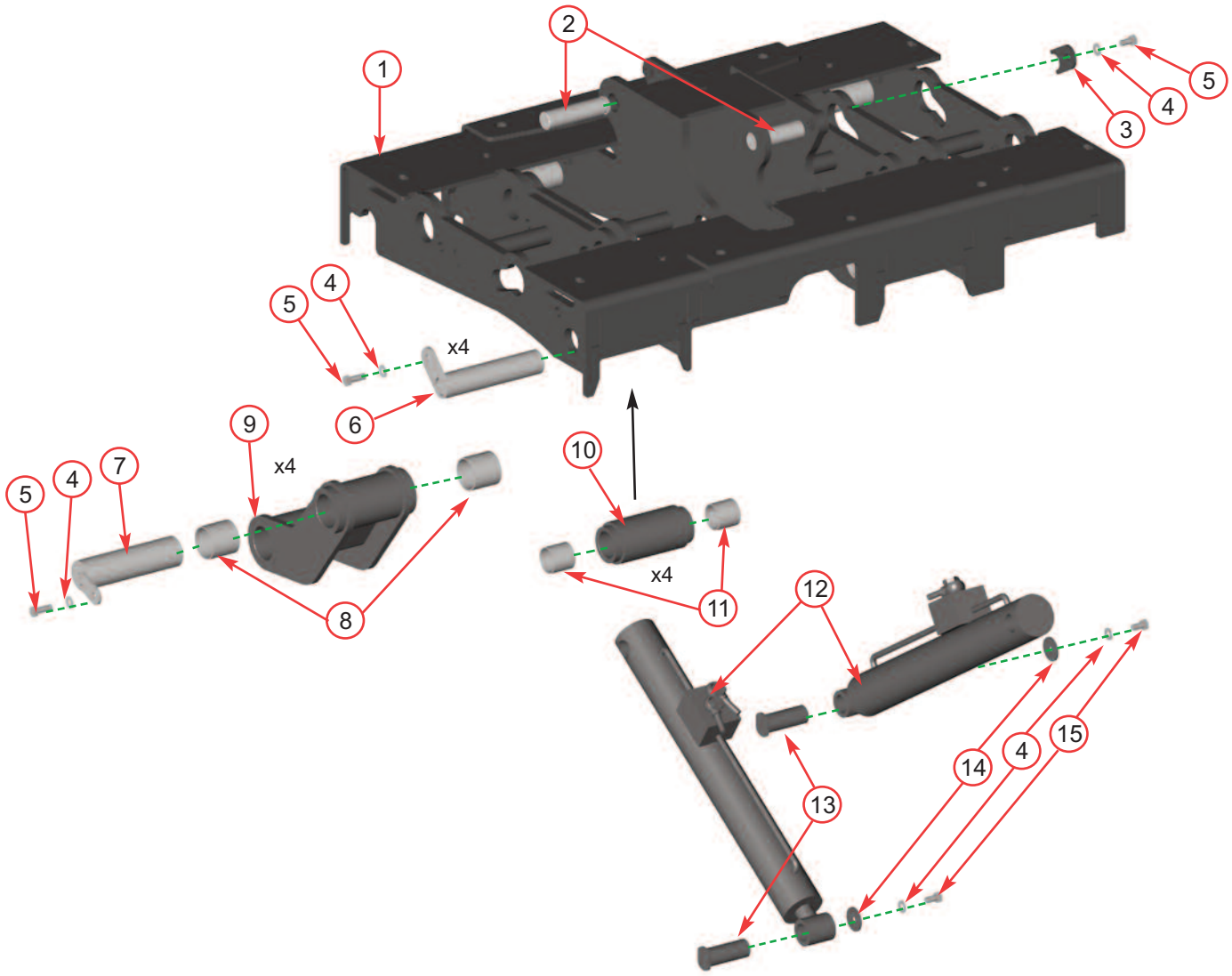

Item	Part No	Part Name	Q'ty
1	18660	Chassis	1
2	18642	Hydraulic Cylinder Top Pin	2
3	18863	Locating Plate	1
4	0701	M10 A Washer	11
5	0382	M10/30 Bolt	9
6	18645	Guide Support Roller Pin	4
7	18638	Drop Arm Top Pin	4
8	18844	Bushes	8

Item	Part No	Part Name	Q'ty
9	18641	Drop Arm	4
10	18640	Guide Roller	4
11	18354	Guide Roller Bushes	4
12	18847	Hydraulic Cylinder	2
13	18646	Hydraulic Cylinder Bottom Pin	2
14	18856	End Cap	2
15	0878	M10/20 Bolt	2

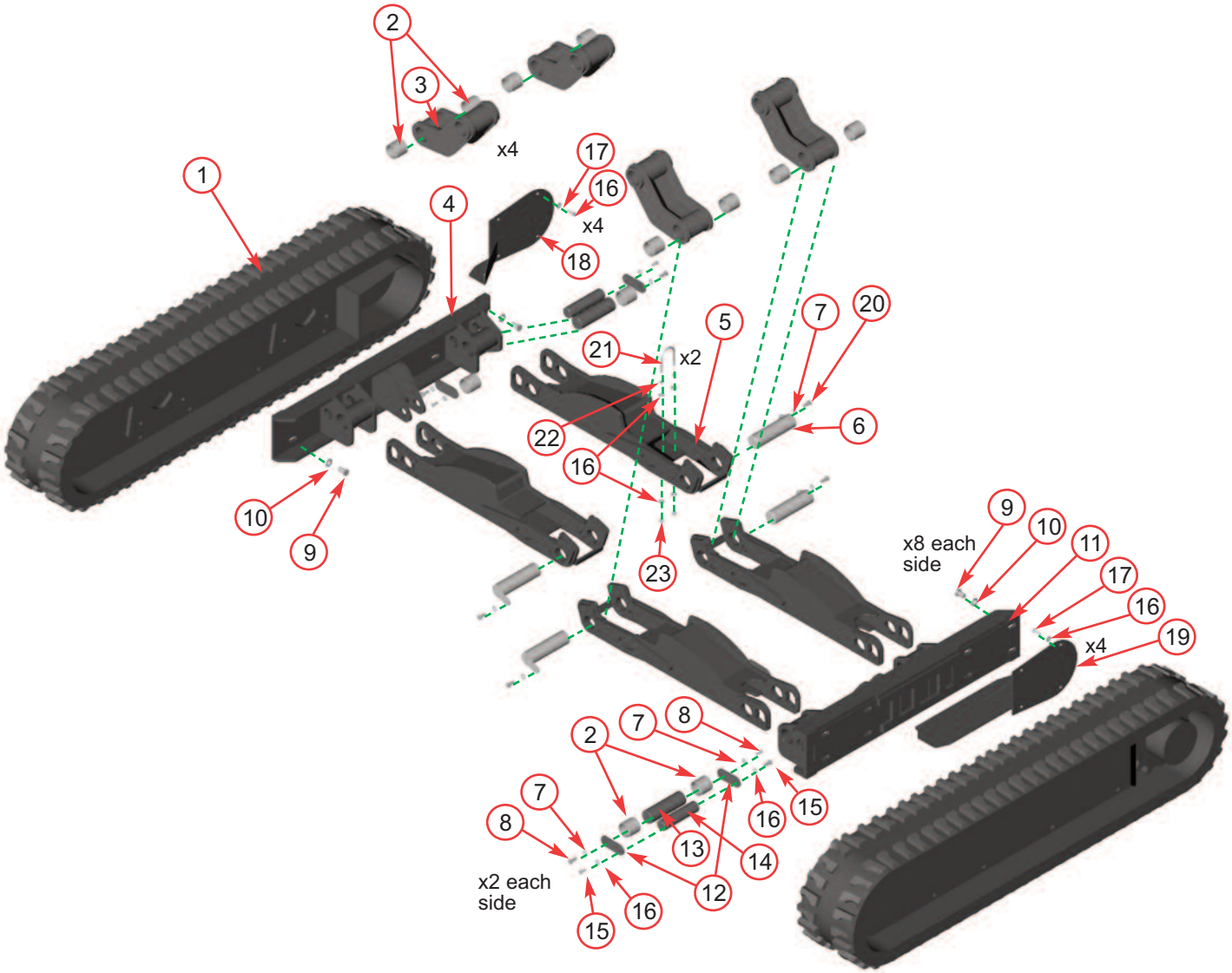

Item	Part No	Part Name	Q'ty
1	18695	Tracks (pair)	1
2	18844	Bush	24
3	18641	Drop Arm	4
4	18757	Nearside End Plate	1
5	18758	Extension Arm	4
6	18639	Drop Arm Bottom Pin	4
7	0839	M10 C Washer	20
8	0360	M10/25 Bolt	8
9	18183	M16/25 Bolt	16
10	1354	M16 C Washer	16
11	18756	Offside End Plate	1
12	18761	Brace Plate	8

Item	Part No	Part Name	Q'ty
13	18759	Hinge Mechanism Pin	4
14	18760	Hinge Mechanism Front Pin	4
15	0346	M8/20 Bolt	8
16	0712	M8 C Washer	24
17	0351	M8/30 Bolt	8
18	19046	L/H Hose Guard	1
19	19045	R/H Hose Guard	1
20	0382	M10/30 Bolt	4
21	19085	Exhaust Clamp	2
22	0476	M8 Plain Nut	4
23	0479	M8 P Nyloc Nut	4

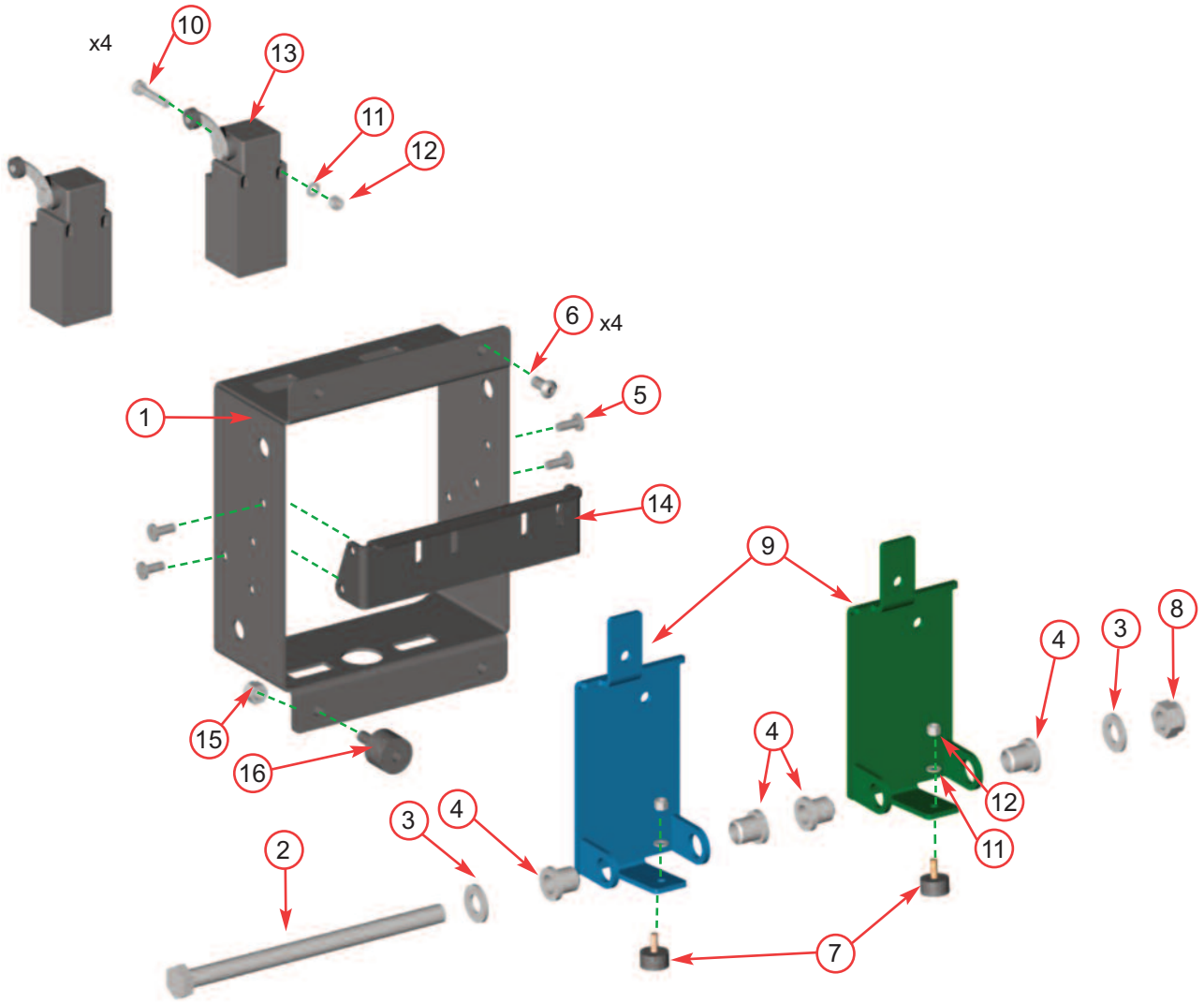

Item	Part No	Part Name	Q'ty
1	17802FB	Control Box Cover	1
2	17963	M10/160 Bolt	1
3	0839	M10 C Washer	2
4	2804	Bush M10 Top Hat	4
5	0067	Pop Rivet M5/12	4
6	18108	M6/8 Pan Pozi	4
7	2834	AV Mount VE Type	2
8	4345	M10 P Nyloc Nut	1

Item	Part No	Part Name	Q'ty
9	17803FS	Finger Plate	2
10	18168	M4/35 Pan Pozi	4
11	18100	M4 Washer	4
12	18235	M4 P Nyloc Nut	4
13	17927	Limit Switch	2
14	17805FS	Switch Mounting Plate	1
15	0142	M6 P Nyloc Nut	4
16	18000	AV Mount	3

CONTROL PANEL

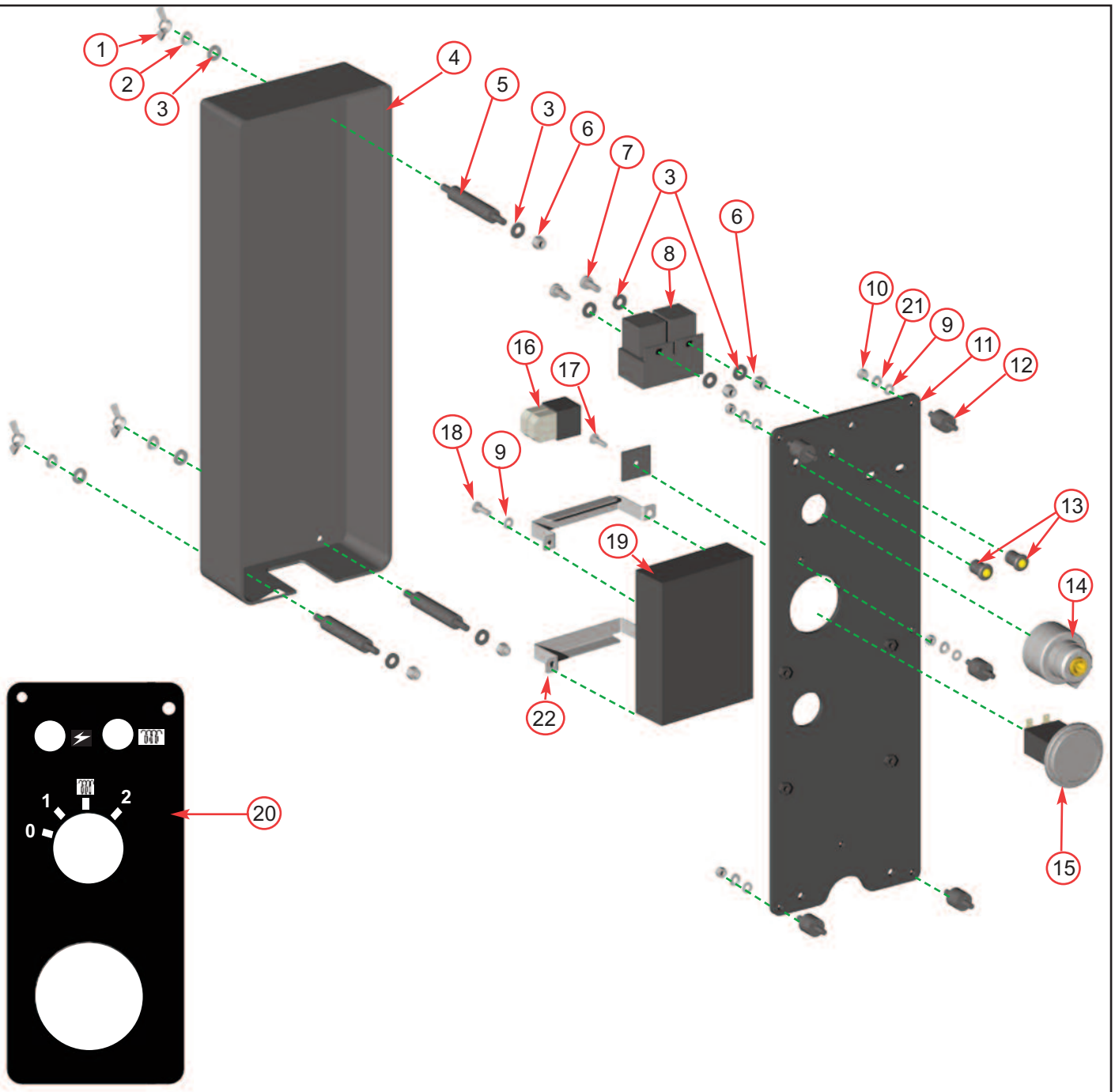

Item	Part No	Part Name	Q'ty
1	18107	M6 Wing Nut	3
2	18106	M6 Split Washer	3
3	0709	M6 C Washer	11
4	1972	Electrical Cover	1
5	2725	Electrical Cover Stand Off	3
6	0391	M6 T Nyloc Nut	5
7	0438	M6/16 Pan Pozi	3
8	Supp'd with loom	Relay	2
9	0857	M5 A Washer	9
10	0236	M5 P Nyloc Nut	5
11	2958FS	Electrical Panel	1

Item	Part No	Part Name	Q'ty
12	4033	M5 AV Mount	5
13	Supp'd with loom	LED	2
14	Supp'd with engine	Ignition Switch	1
15	0327	Hours Counter	1
16	Supp'd with loom	Fuse	2
17	1151	Countersunk Pop Rivet	1
18	0435	M5/16 Pan Pozi	4
19	18405	H-Box	1
20	2951	Control Panel Decal	1
21	3024	M5 Spring Washer	5
22	18398	Mounting Bracket	2

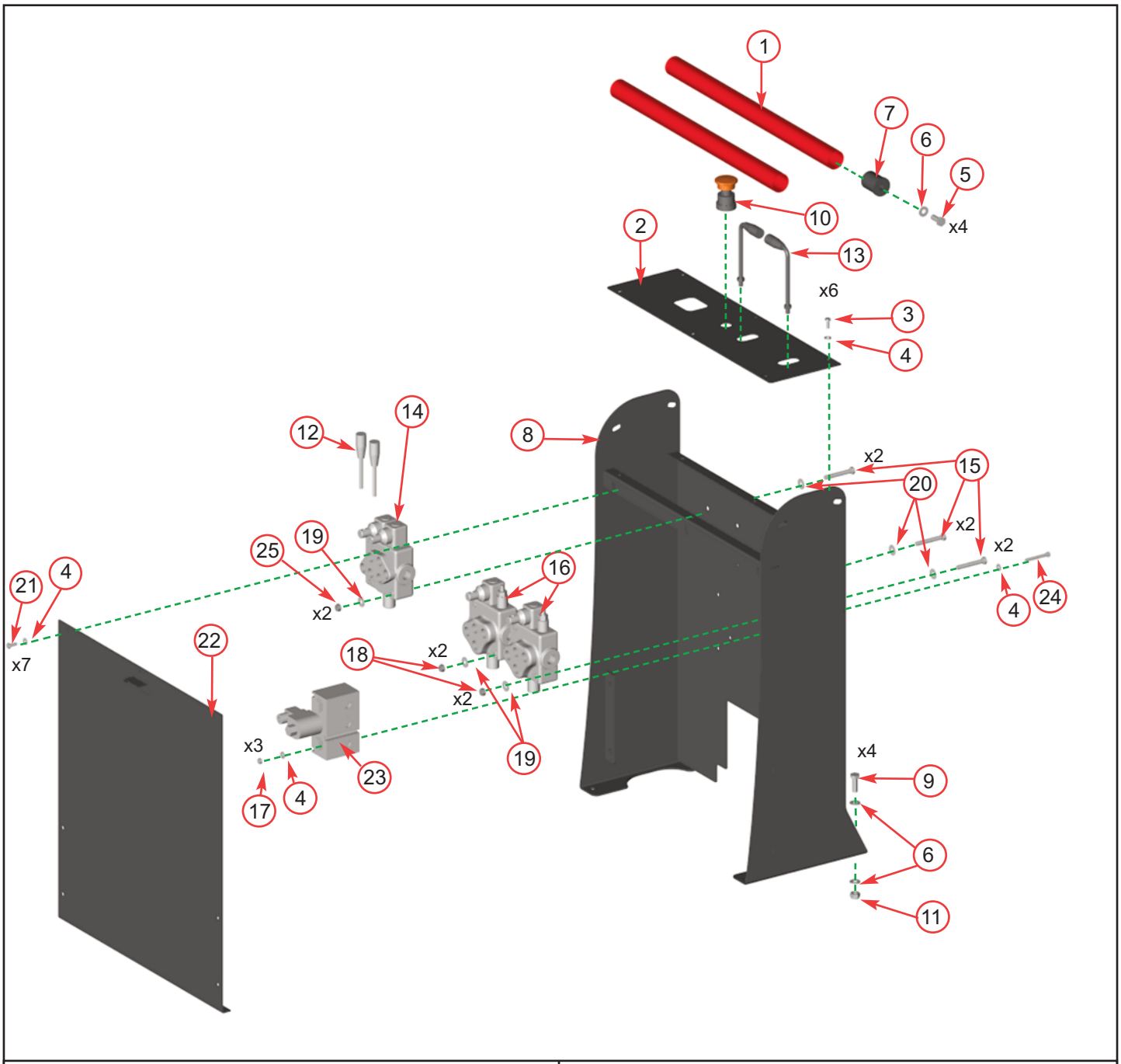

Item	Part No	Part Name	Q'ty
1	1802FR	Cross Bar	2
2	18634FB	Control Panel Tracked	1
3	1658	M6/12 Bolt	6
4	0709	M6 C Washer	19
5	0360	M10/25 Bolt	4
6	0839	M10 C Washer	12
7	1803P	End Plug	4
8	18632FB	Control Tower	1
9	0382	M10/30 Bolt	4
10	18574	Track/Chip Switch	1
11	0052	M10 T Nyloc Nut	4
12	1860	M8 Lever	2
13	18850	L Handle	2

Item	Part No	Part Name	Q'ty
14	18694	Control Valve	1
15	0354	M8/60 Bolt	6
16	P*24	Proportional Crossover Valve	2
17	0391	M6 T Nyloc Nut	3
18	0481	M8 T Nyloc Nut	6
19	0711	M8 A Washer	6
20	0712	M8 C Washer	6
21	0437	M6/16 Bolt	7
22	18633FB	Front Valve Cover	1
23	18846	Solenoid Valve	1
24	18882	M6/90 Bolt	3
25	0479	M8 P Nyloc Nut	2

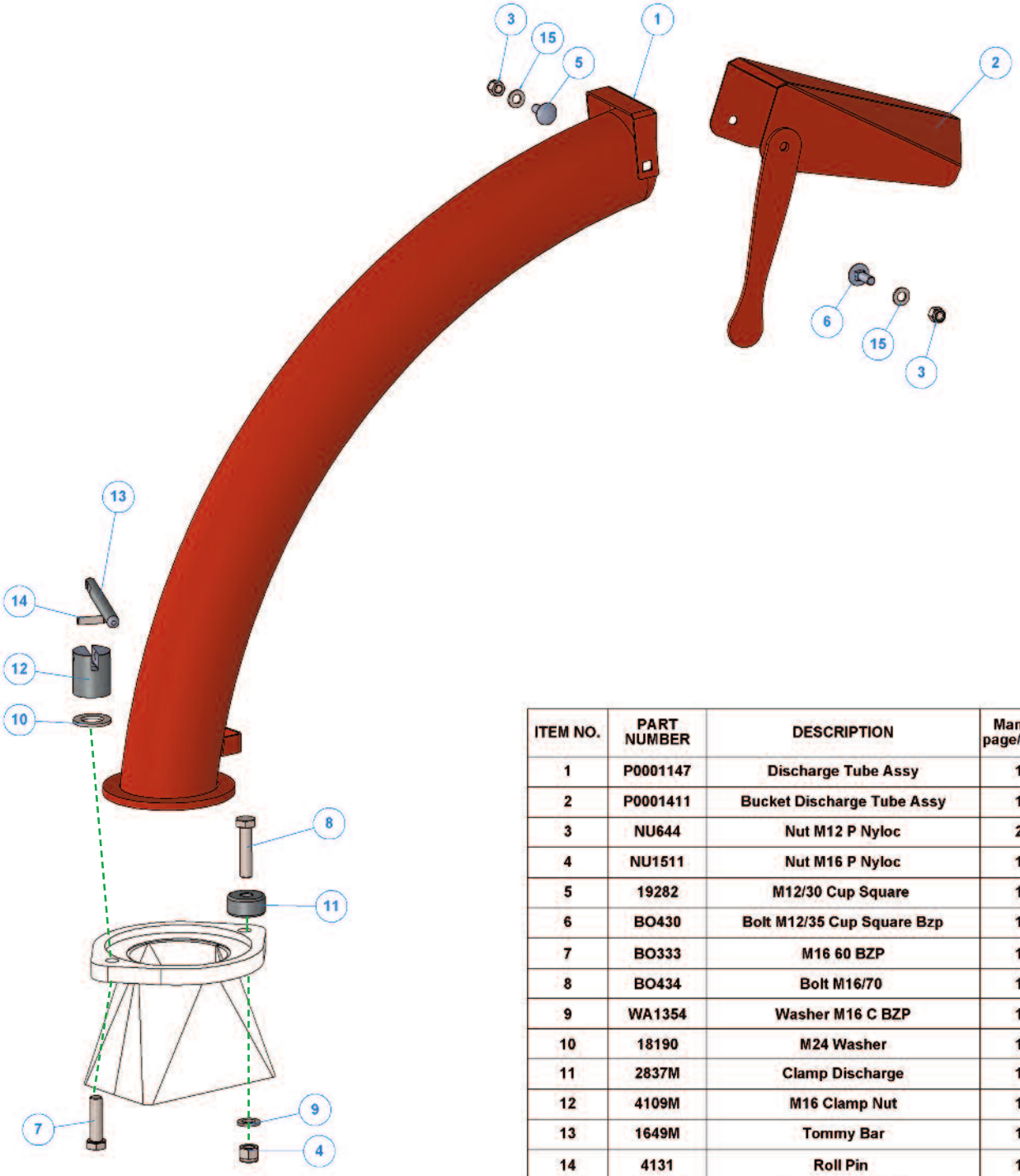

ITEM NO.	PART NUMBER	DESCRIPTION	Manual page/QTY.
1	P0001147	Discharge Tube Assy	1
2	P0001411	Bucket Discharge Tube Assy	1
3	NU644	Nut M12 P Nyloc	2
4	NU1511	Nut M16 P Nyloc	1
5	19282	M12/30 Cup Square	1
6	BO430	Bolt M12/35 Cup Square Bzp	1
7	BO333	M16 60 BZP	1
8	BO434	Bolt M16/70	1
9	WA1354	Washer M16 C BZP	1
10	18190	M24 Washer	1
11	2837M	Clamp Discharge	1
12	4109M	M16 Clamp Nut	1
13	1649M	Tommy Bar	1
14	4131	Roll Pin	1
15	WA702	Washer M12 A BZP	2

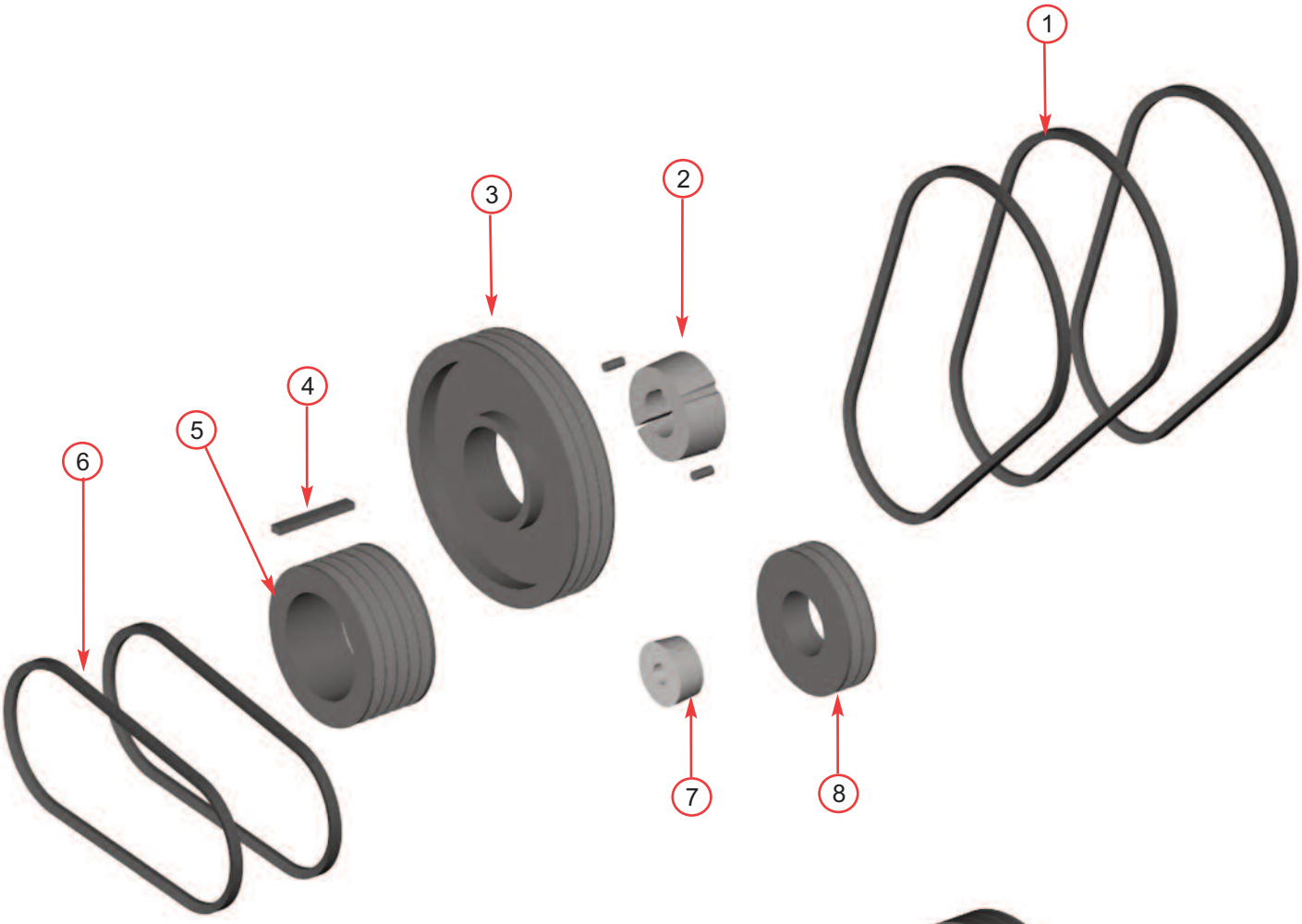

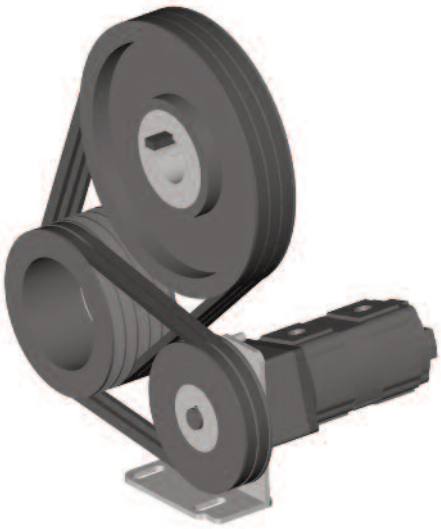

Item	Part No	Part Name	Q'ty
1	17322	Vee Belt 1232 SPA	3
2	4327	Taper Lock Bush 2517 50 mm	1
3	17321	Pulley 280 x 3	1
4	2984M	Key 54 x 14	1
5	18855	Pulley Engine 168 x 5	1
6	0994	Vee Belt SPA 950	2
7	18854	Taper Lock Bush 2012 / 022	1
8	18853	Pulley 150 x 2 SPA	1

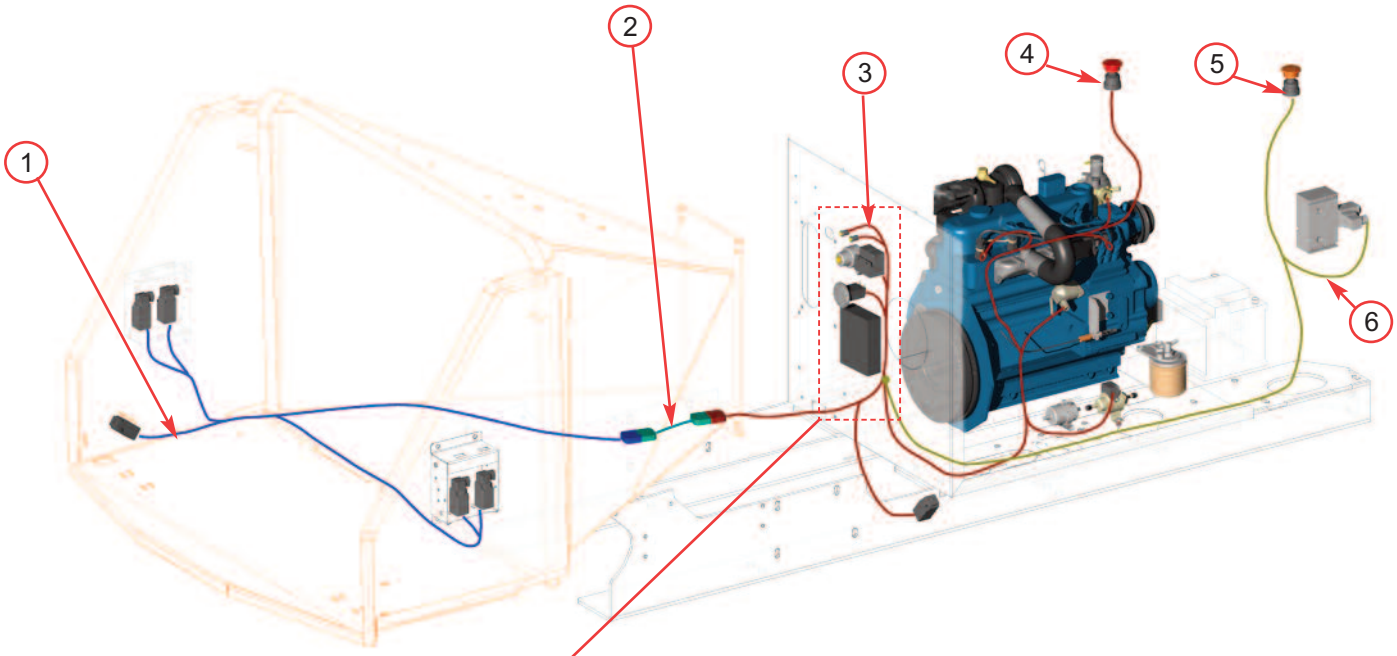

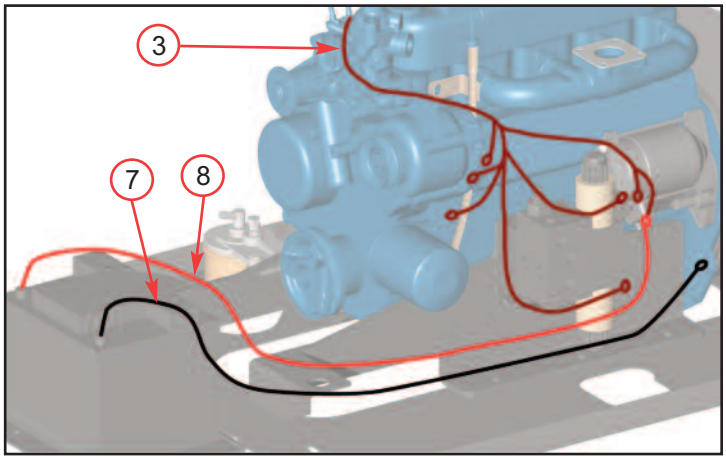

Item	Part No	Part Name	Q'ty
1	17809	Control Box/Safety Switch Loom	1
2	18911	Extension Loom	1
3	18482	Main Loom	1
4	2627	Emergency Stop Switch	1

Item	Part No	Part Name	Q'ty
5	18574	Track/Chip Switch	1
6	18865	Mode Selection Loom	1
7	1376	-VE Battery Cable	1
8	1375	+VE Battery Cable	1

Date Last Modified: 13th Dec 2012

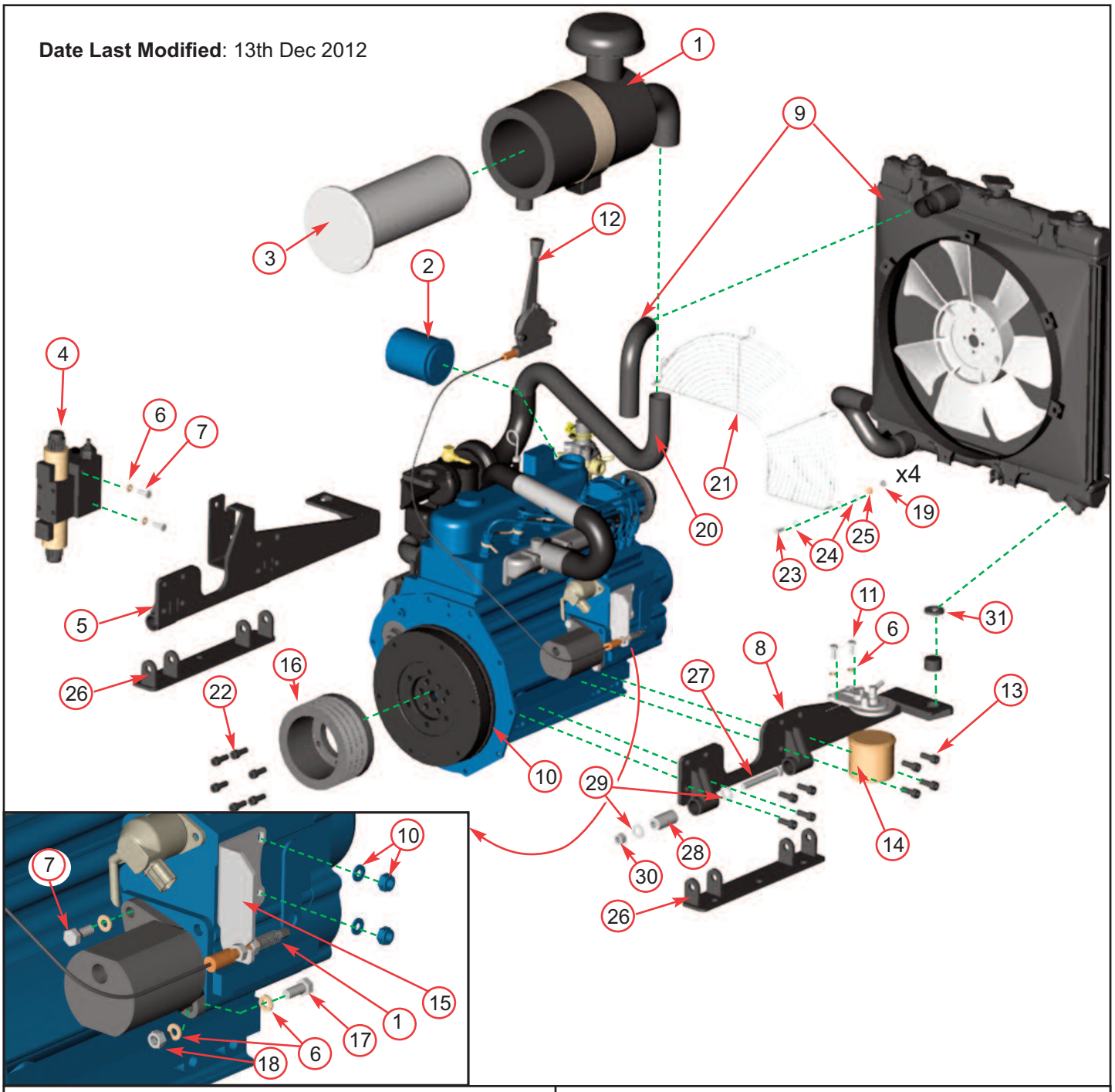

Item	Part No	Part Name	Q'ty
1	4316	Air Cleaner	1
2	0095	Oil Filter	1
3	—	Air Filter	1
4	4252	Directional Control Valve (DCV)	1
5	19158FB	Engine Bracket Nearside	1
6	0711	M8 A Washer	7
7	0346	M8/20 Bolt	3
8	19157FB	Engine Bracket Offside	1
9	4319	Radiator Kit	1
10	4313	Engine	1
11	0350	M8/25 Bolt	2
12	2946	Throttle Assembly	1
13	0304	M10/25 Fine Thread Socket Cap	16
14	0085	Fuel Filter	1
15	2954FS	Throttle Cable Bracket	1
16	18855	Pulley Engine 168 x 5	1

Item	Part No	Part Name	Q'ty
17	0352	M8/40 Bolt	1
18	0481	M8 T Nyloc Nut	1
19	0392	M6 Plain Nut	4
20	4297FB	Air Intake Tube	1
21	4335	Radiator Fan Guard	1
22	4054	M10/35 Fine Thread Socket Cap	6
23	0437	M6/16 Bolt	4
24	0709	M6 C Washer	8
25	18106	M6 Spring Washer	4
26	18629FB	Engine Bracket Base	2
27	0332	M12/90 Bolt	4
28	18522	AV Mount	4
29	0704	M12 C Washer	4
30	0644	M12 P Nyloc Nut	4
31	17337	Rubber Spacer	2

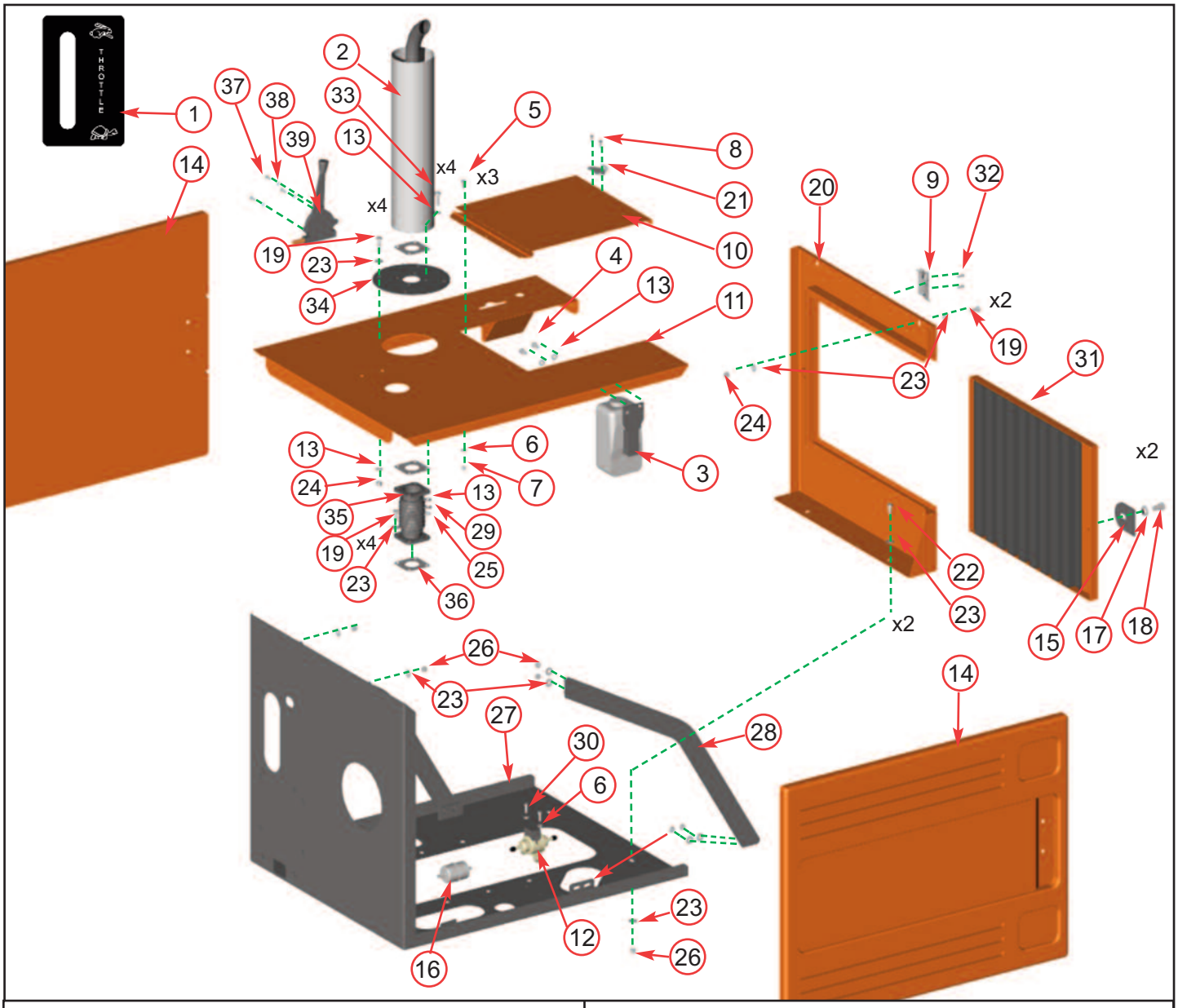

Item	Part No	Part Name	Q'ty
1	2950	Throttle Decal	1
2	18915F	Exhaust Muffler Complete	1
3	4320	Reserve Tank	1
4	0344	M8/16 Bolt	2
5	0438	M6/16 Pan Pozi	3
6	0709	M6 C Washer	5
7	0142	M6 P Nyloc Nut	3
8	0066	Pop Rivet 5 x 6	2
9	0235	Catch Plate	1
10	0607FO	Access Cover	1
11	4270FO	Top Bonnet	1
12	0807	Fuel Pump	1
13	0711	M8 A Washer	14
14	0765O	Side Panel	2
15	2836FO	Engine Guard Retainer	2
16	4315	In-Line Fuel Filter	1
17	0704	M12 C Washer	2
18	0318	M12/20 Bolt	2
19	0346	M8/20 Bolt	10
20	18580FO	Front Engine Bay Guard	1

Item	Part No	Part Name	Q'ty
21	4088	Catch	1
22	0350	M8/25 Bolt	2
23	0712	M8 C Washer	26
24	1757	M8 P Nyloc Nut	6
25	0476	M8 Plain Nut	4
26	0481	M8 T Nyloc Nut	12
27	2955FO	Engine Base Guard	1
28	1984FS	Engine Guard Bracket	1
29	1008	Spring Washer	4
30	0437	M6/16 Bolt	2
31	18581FO	Shroud Radiator with Grille	1
32	0067	Pop Rivet 4.8 x 12	2
33	18117	M8/35 Bolt	4
34	18851	Muffler Plate	1
35	18456	Flexi Adaptor	1
36	17988	Gasket	3
37	P*445	M5/16 Caphead	3
38	0857	M5 A Washer	3
39	2946	Throttle Assy	1

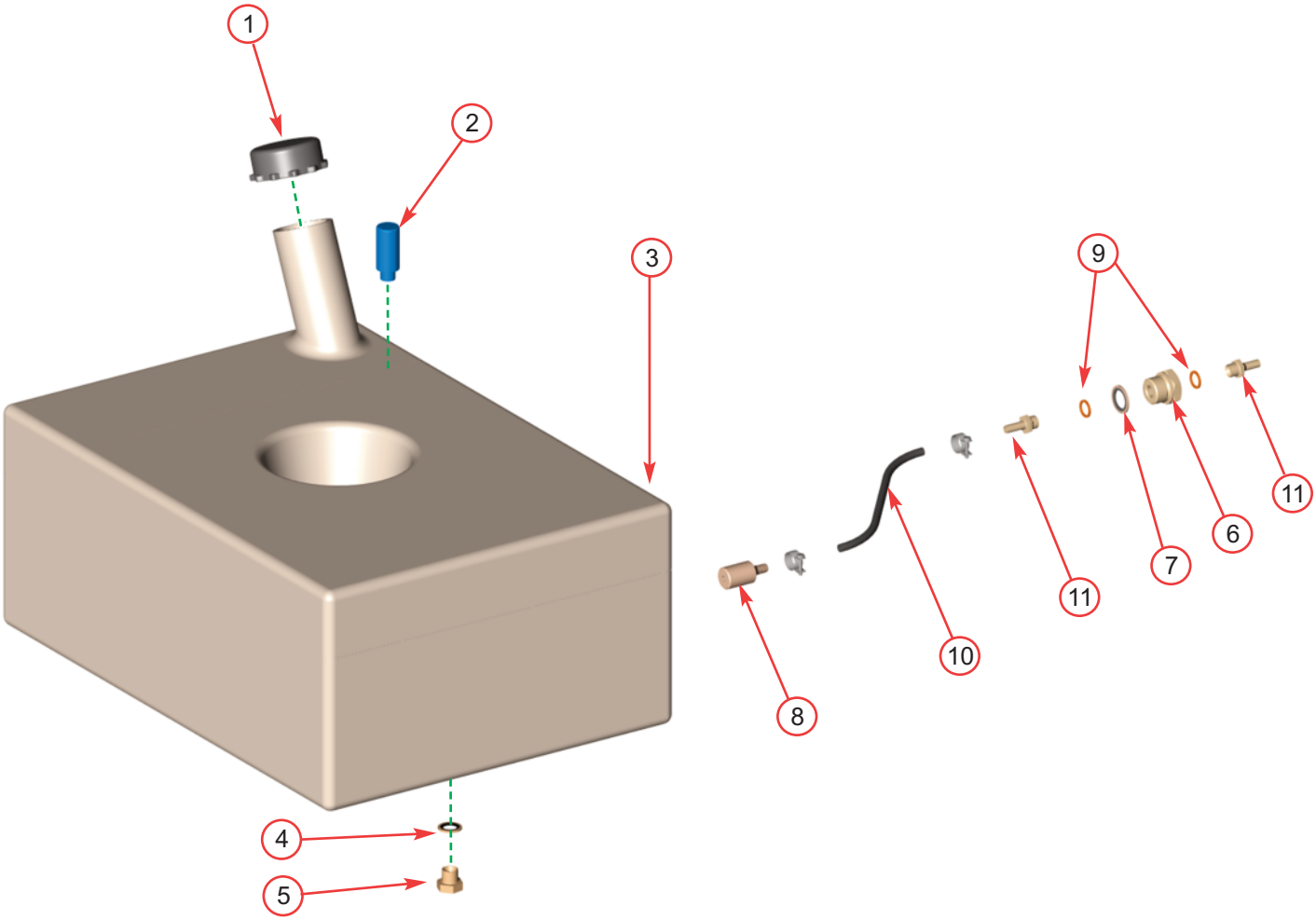

Item	Part No	Part Name	Q'ty
1	P*611	Tank Cap	1
2	P*613	Breather	1
3	18392K	Fuel Tank Kit (inc. parts 6 - 11)	1
4	0396	3/8" Dowty Washer	1
5	0211	3/8 Drain Plug	1
6	18568	Reducer Bush	1

Item	Part No	Part Name	Q'ty
7	0152	3/4" Dowty Washer	1
8	2897M	Pick Up Weight	1
9	2896	Copper Washer	2
10	0389	8 mm Rubber Pipe	1
11	1992	Tail Hose	2

FUNNEL

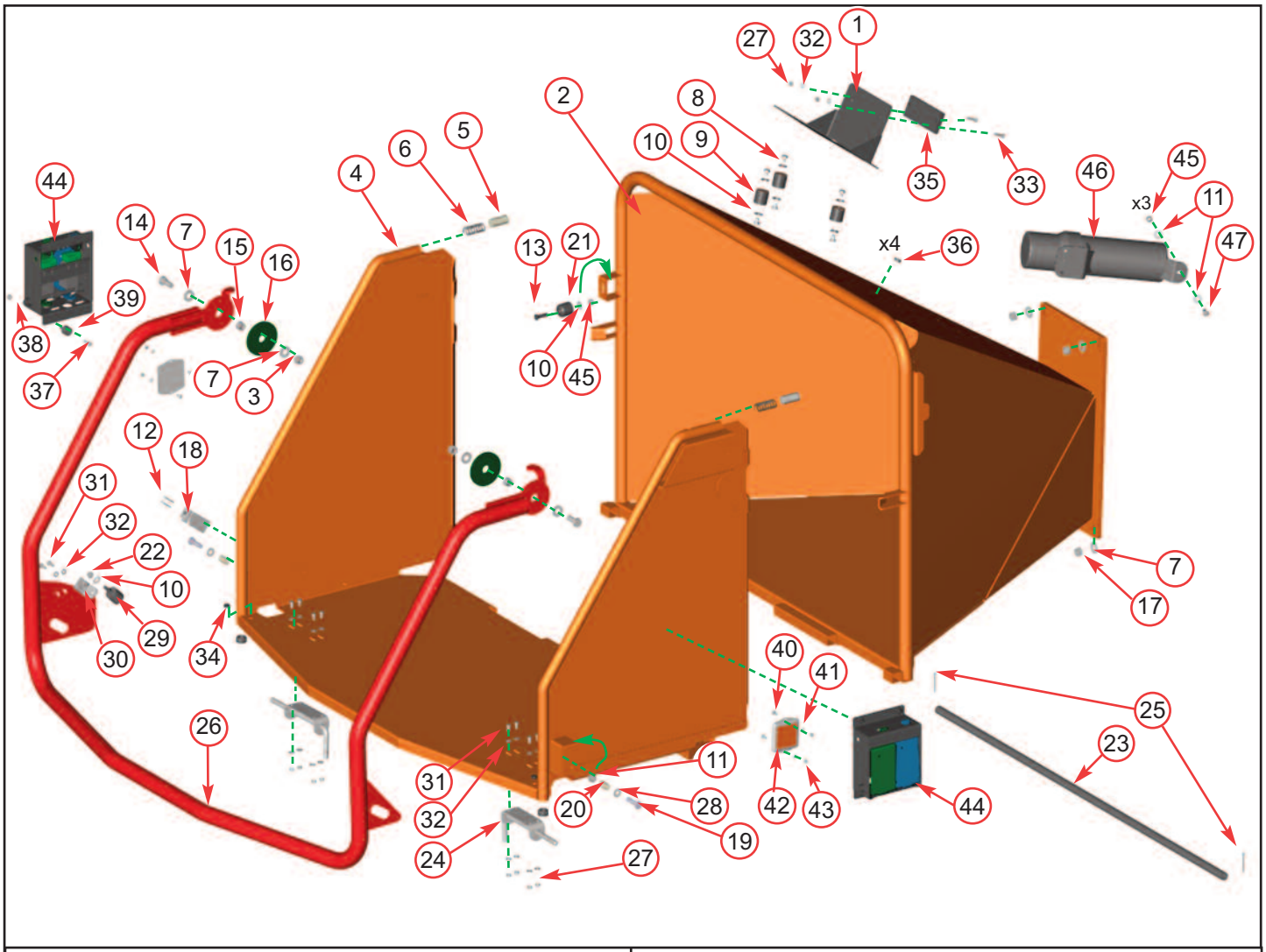

Item	Part No	Part Name	Q'ty
1	18913F	Inclinometer Bracket	1
2	2913FO	Funnel	1
3	0045	M12 T Nyloc Nut	2
4	2914FO	Feed Tray	1
5	1601	Nylon Piston	2
6	1603	Die Spring	2
7	0704	M12 C Washer	8
8	0342	M8/10 Bolt	6
9	1644	M8 Anti-Vibration Mount	3
10	0712	M8 C Washer	14
11	4345	M10 P Nyloc Nut	2
12	1006	M4/30 Pan Pozi	2
13	4342	M8/30 Csk Soc.	1
14	0429	M12/35 Bolt	2
15	1605M	Stainless Spacer	2
16	1599	Bearing Washer	2
17	0046	M12 Plain Nut	4
18	1348	Limit Switch	1
19	1520	M10/45 Bolt	2
20	1591	Nylon Spacer	2
21	4206	Nylon Bush	1
22	0479	M8 P Nyloc Nut	1
23	2923FS	Hinge Pin	2
24	2986	1/2" Spring Bolt	2

Item	Part No	Part Name	Q'ty
25	1276	Split Pin	2
26	1598FR	Safety Bar	1
27	0391	M6 T Nyloc Nut	10
28	4344	M10 C Repair Washer	2
29	0178	Rubber End Stop	1
30	2727FS	Actuator Bracket	1
31	0437	M6/16 Bolt	10
32	0709	M6 C Washer	12
33	1253	M6/25 Bolt	2
34	2493	Rubber Cap	2
35	18852	Inclinometer	1
36	0654	Grommet	4
37	0438	M6/16 Pan Pozi	4
38	1511	M16 P Nyloc Nut	4
39	1800	AV Mount	8
40	18104	M5/12 Pan Pozi	4
41	0857	M5 A Washer	4
42	18924	Square Reflector	2
43	18102	M5 T Nyloc Nut	2
44	*(see page 38)*	Control Box	2
45	0481	M8 T Nyloc Nut	44
46	P*144	Manual Cannister	1
47	0347	M8/30 Button Head	3

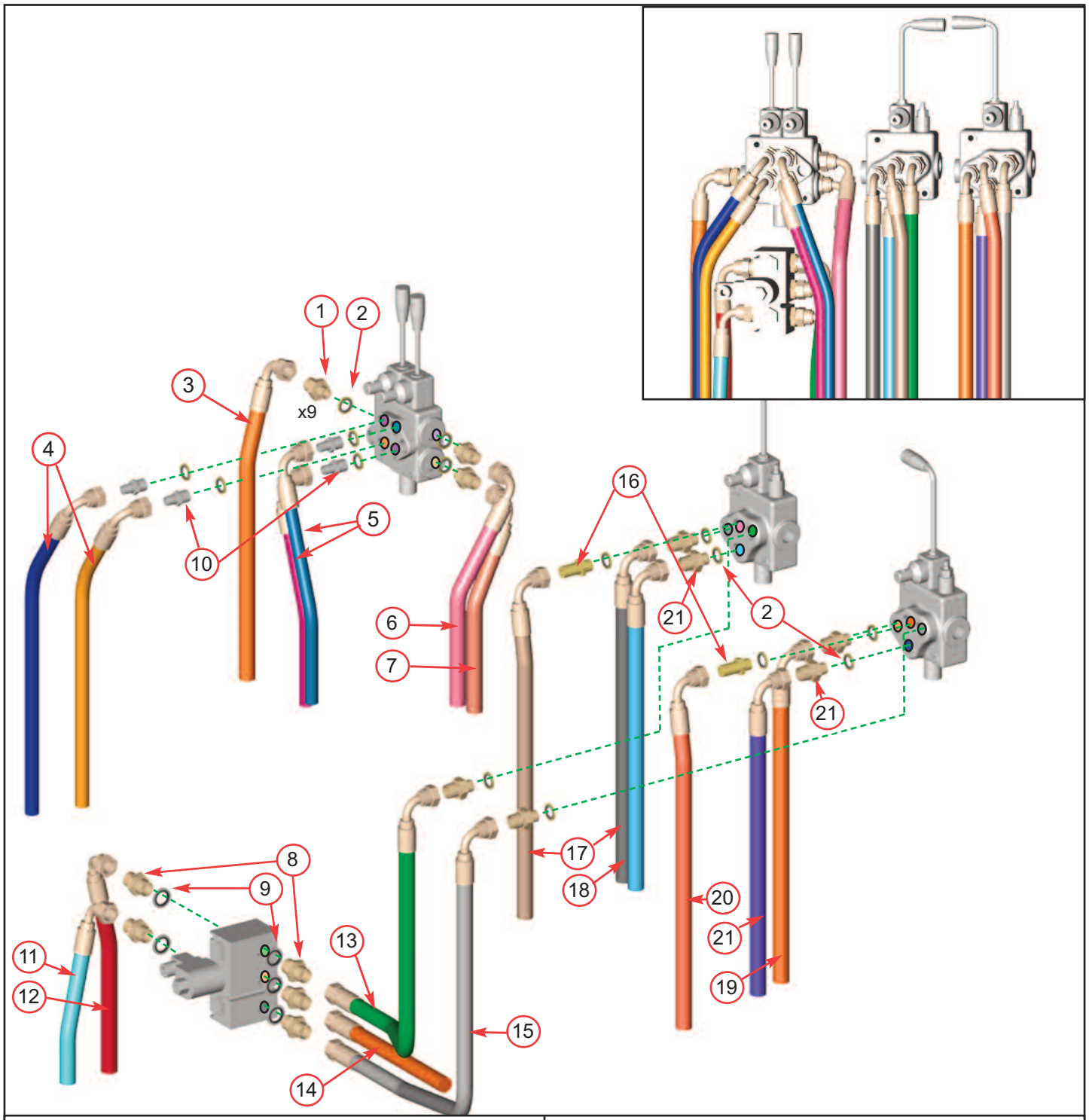

Item	Part No	Part Name	Q'ty
1	0026	3/8" - 1/2" M/M Adapter	12
2	0396	3/8" Dowty Seal	14
3	18676	1/2" Hose	1
4	18682	1/4" Hose	2
5	18683	1/4" Hose	2
6	18675	1/2" Hose	1
7	18673	1/2" Hose	1
8	0027	1/2" - 1/2" Adapter	5
9	0398	1/2" Dowty Washer	1
10	0033	3/8" - 1/4" Adapter	4
11	18667	1/2" Hose	1

Item	Part No	Part Name	Q'ty
12	18666	1/2" Hose	1
13	18668	1/2" Hose	1
14	18677	1/2" Hose	1
15	18669	1/2" Hose	1
16	0828	3/8" Bulk Head Adapter	2
17	P*305	3/8" Hose	2
18	18670	1/2" Hose	1
19	18881	1/2" Hose	1
20	P*306	3/8" Hose	2
21	0161	3/8" - 3/8" M/M Adapter	2

HYDRAULICS (CENTRE)

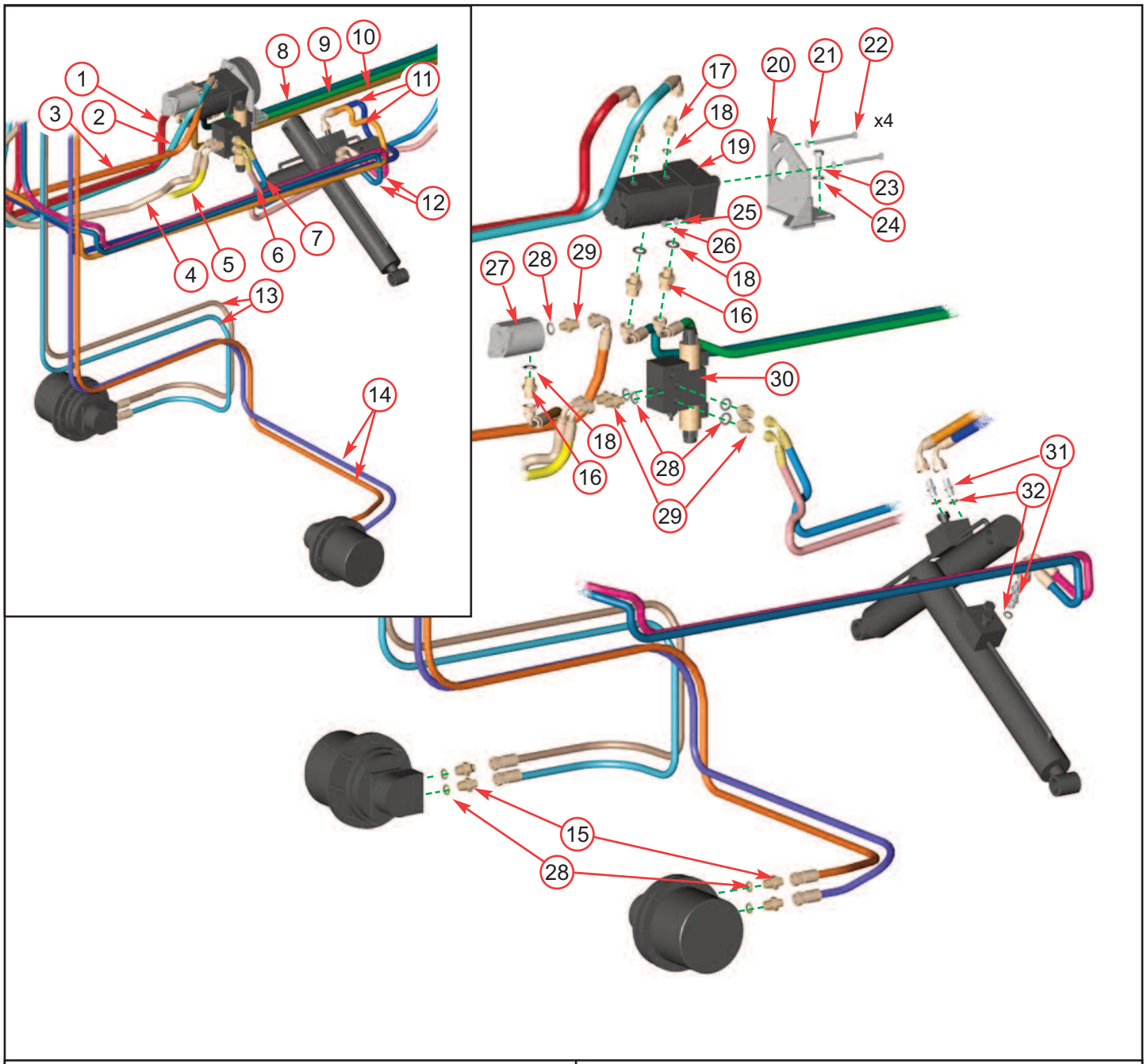

Item	Part No	Part Name	Q'ty
1	18666	1/2" Hose	1
2	18667	1/2" Hose	1
3	18676	1/2" Hose	1
4	18675	1/2" Hose	1
5	19044	1/2" Hose	1
6	2883	1/2" Hose	1
7	2882	1/2" Hose	1
8	18878	3/4" Hose	1
9	18877	3/4" Hose	1
10	18879	3/4" Hose	1
11	18682	1/4" Hose	1
12	18683	1/4" Hose	1
13	P*305	3/8" Hose	2
14	P*306	3/8" Hose	2
15	0161	3/8" - 3/8" M/M Adapter	4
16	1583	3/4" - 1/2" Adapter	3

Item	Part No	Part Name	Q'ty
17	0027	1/2" - 1/2" M/M Adapter	2
18	0398	1/2" Dowty Seal	5
19	18848	Pump	1
20	18903FS	Pump Bracket	1
21	0712	M8 C Washer	4
22	2988	M8/90 Bolt	4
23	0429	M12/35 Bolt	2
24	0704	M12 C Washer	2
25	0071	M8 A Washer	8
26	0479	M8 P Nyloc Nut	4
27	1660	Engine Pump	1
28	0396	3/8" Dowty Seal	9
29	0026	3/8" - 1/2" M/M Adapter	5
30	4252	Directional Control Valve (DCV)	1
31	18883	1/4" - 1/4" Adapter	4
32	0395	1/4" Dowty Seal	4

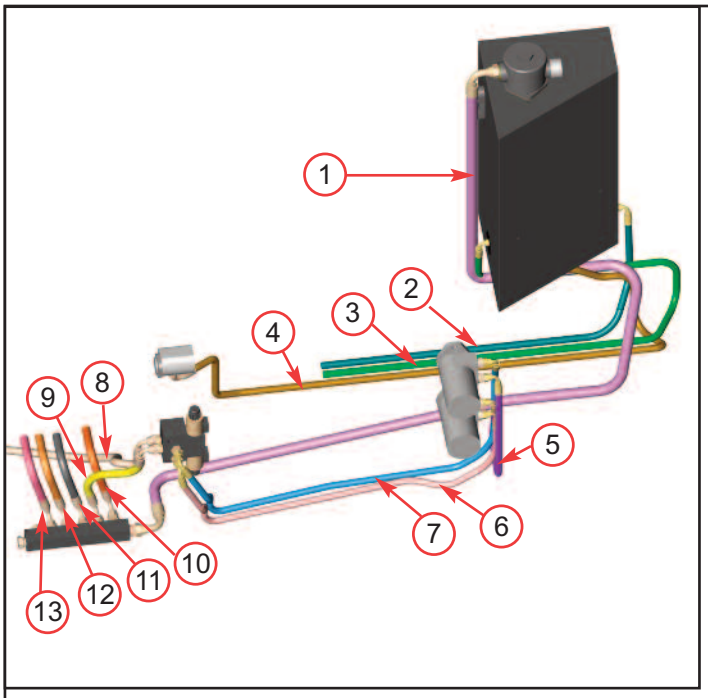

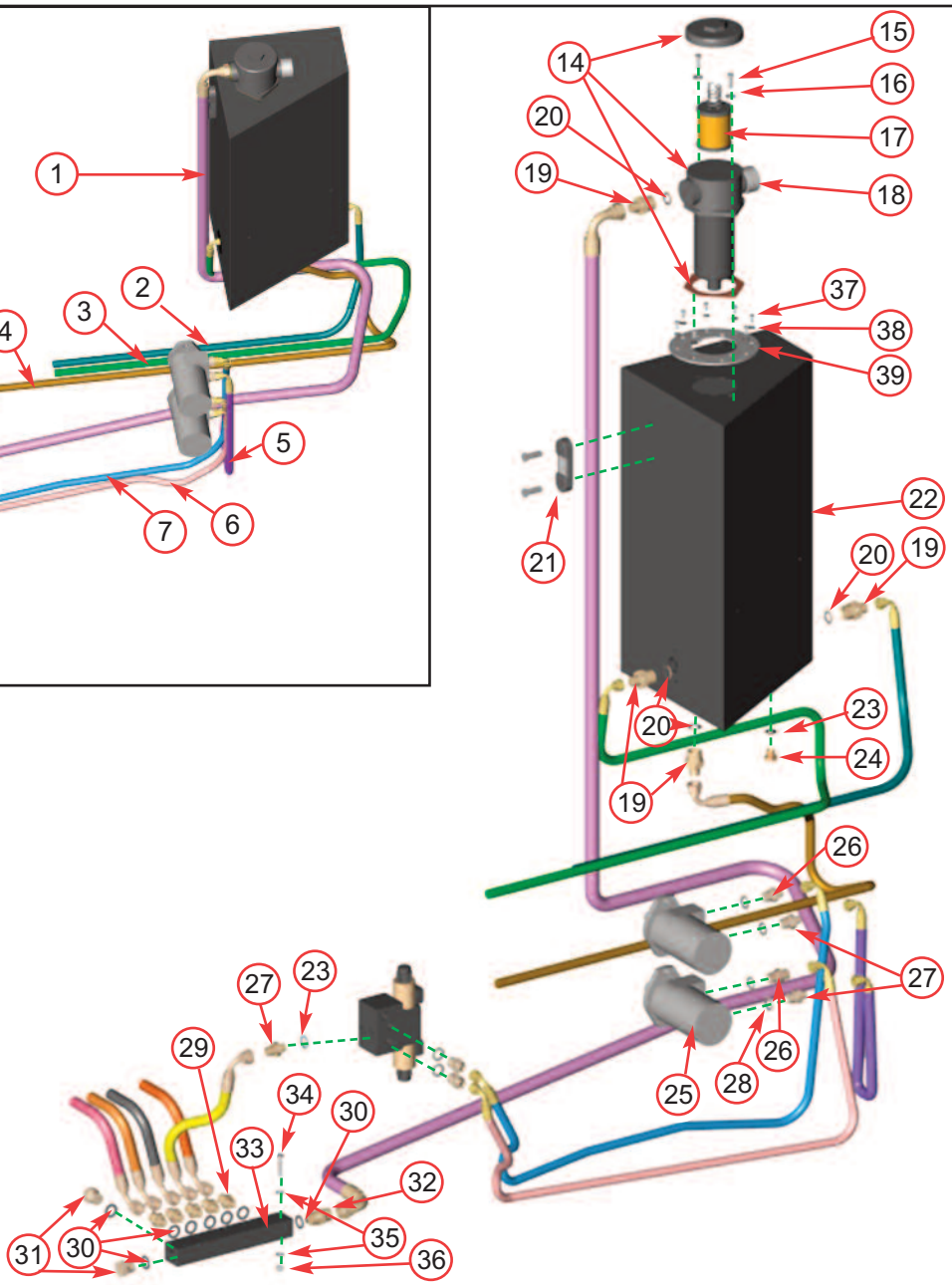

Item	Part No	Part Name	Q'ty
1	18665	3/4" Hose	1
2	18878	3/4" Hose	1
3	18877	3/4" Hose	1
4	18879	3/4" Hose	1
5	2885	3/8" Hose	1
6	2883	1/2" Hose	1
7	2882	1/2" Hose	1
8	18675	1/2" Hose	1
9	19044	1/2" Hose	1
10	18881	1/2" Hose	1
11	18670	1/2" Hose	1
12	18675	1/2" Hose	1
13	18677	1/2" Hose	1
14	1954	Tank Top Filter	1
15	0350	M8/25 Bolt	2
16	0711	M8 A Washer	2
17	2893	Filter Element	1
18	1067	Breather Filter	1
19	2694	1" - 3/4" Adapter	3
20	2693	1" Dowty Seal	3

Item	Part No	Part Name	Q'ty
21	1163	Oil Level Gauge	1
22	18845	Hydraulic Oil Tank	1
23	0398	3/8" Dowty Seal	2
24	0211	3/8" Blanking Plug	1
25	2982B	Motor	2
26	0027	1/2"- 1/2" Adapter	2
27	0026	1/2"- 3/8" Adapter	3
28	0398	1/2" Dowty Seal	4
29	1583	3/4" - 1/2" Adapter	4
30	0152	3/4" Dowty Seal	8
31	1632	3/4" Blanking Plug	2
32	1766	3/4" - 3/4" Adapter	1
33	18880M	Manifold	1
34	0354	M8/60 Bolt	3
35	0711	M8 A Washer	6
36	0479	M8 P Nyloc Nut	3
37	1658	M6/12 Bolt	8
38	0709	M6 C Washer	8
39	1702FS	Hydraulic Tank Top	1

ROLLER BOX

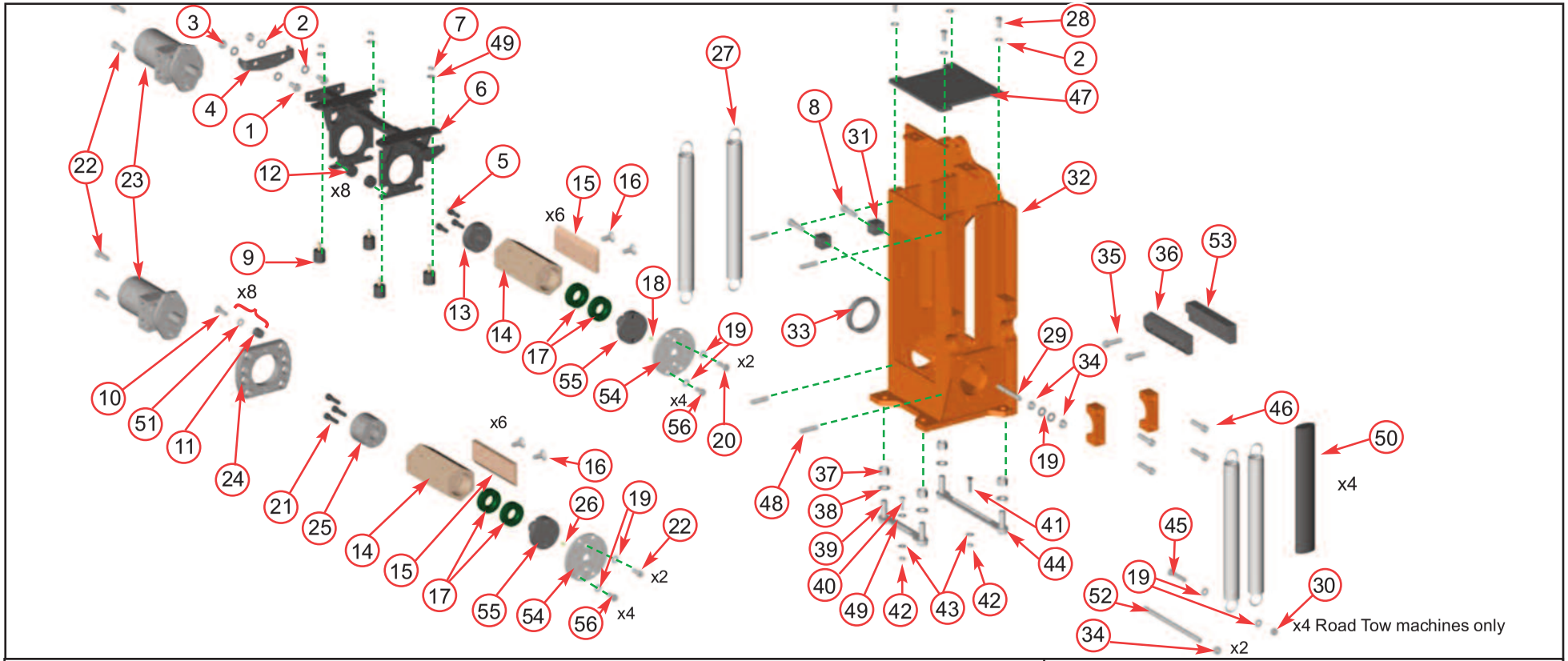

Item	Part No	Part Name	Q'ty
1	0382	M10/30 Bolt	2
2	0701	M10 A Washer	8
3	0052	M10 T Nyloc Nut	2
4	2748FS	Short Spring Hanger	1
5	0305	M10/25 Caphead	4
6	P*200	Top Roller Slide Assembly	1
7	0481	M8 T Nyloc Nut	4
8	1526	M12/25 Caphead	2
9	1768	AV Mount	4
10	1812	M10/35 Bolt	8
11	3026	AV Bush Concentric	8
12	3009	Slide Plug	8
13	2732M	Adapter Spline 6B	1
14	1947M	Roller Hub 190	2
15	1948MH	Roller Blade 190	12
16	0428	M12/30 CSK Blade Bolts	24
17	0788	Bearing Plastic Bush	4
18	0986	45° Grease Nipple	1
19	0702	M12 A Washer	31

Item	Part No	Part Name	Q'ty
20	0481	M12/30 Bolt	2
21	1525	M10/40 Caphead	3
22	1985	M12/30 Caphead	6
23	2982B	Hydraulic Motor	2
24	3025MS	Bracket Motor AV Mount	1
25	2731M	Adapter Spline	1
26	0985	Straight Grease Nipple	1
27	19052	Spring	4
28	0878	M10/20 Bolt	4
29	4341	M12/150 Threaded Bar	1
30	0045	M12 T Nyloc Nut	4
31	1898M	Damper Stop	2
32	18491FO	Roller Box 190mm	1
33	2733M	Bearing Roller Motor Side	1
34	0046	M12 Plain Nut	4
35	1517	M12/40 Caphead	2
36	4223M	Anvil Primary Left Side	1
37	1284	M16 T Nyloc Nut	4
38	1143	M16 A Washer	4

Item	Part No	Part Name	Q'ty
39	2783FS	Fitting Bracket Short	4
40	0351	M8/30 Bolt	1
41	4342	M8/30 CSK Screw	1
42	0479	M8 P Nyloc Nut	2
43	0712	M8 C Washer	2
44	18268FS	Fitting Bracket Long	1
45	0330	M12/70 Bolt	4
46	4340	M12/50 Caphead	4
47	1840FS	Roller Box Top	1
48	0356	Roller Box Stud	4
49	0711	M8 A Washer	5
50	2888	Layflat Spring Protector	4
51	0839	M10 C Washer	8
52	—	M12/255 Threaded Rod	2
53	4224M	Anvil Primary Right Side	1
54	17374P	Stub Shaft Profile	2
55	17375M	Stub Shaft	2
56	0429	M12/35 Bolt	8

53 ROTOR

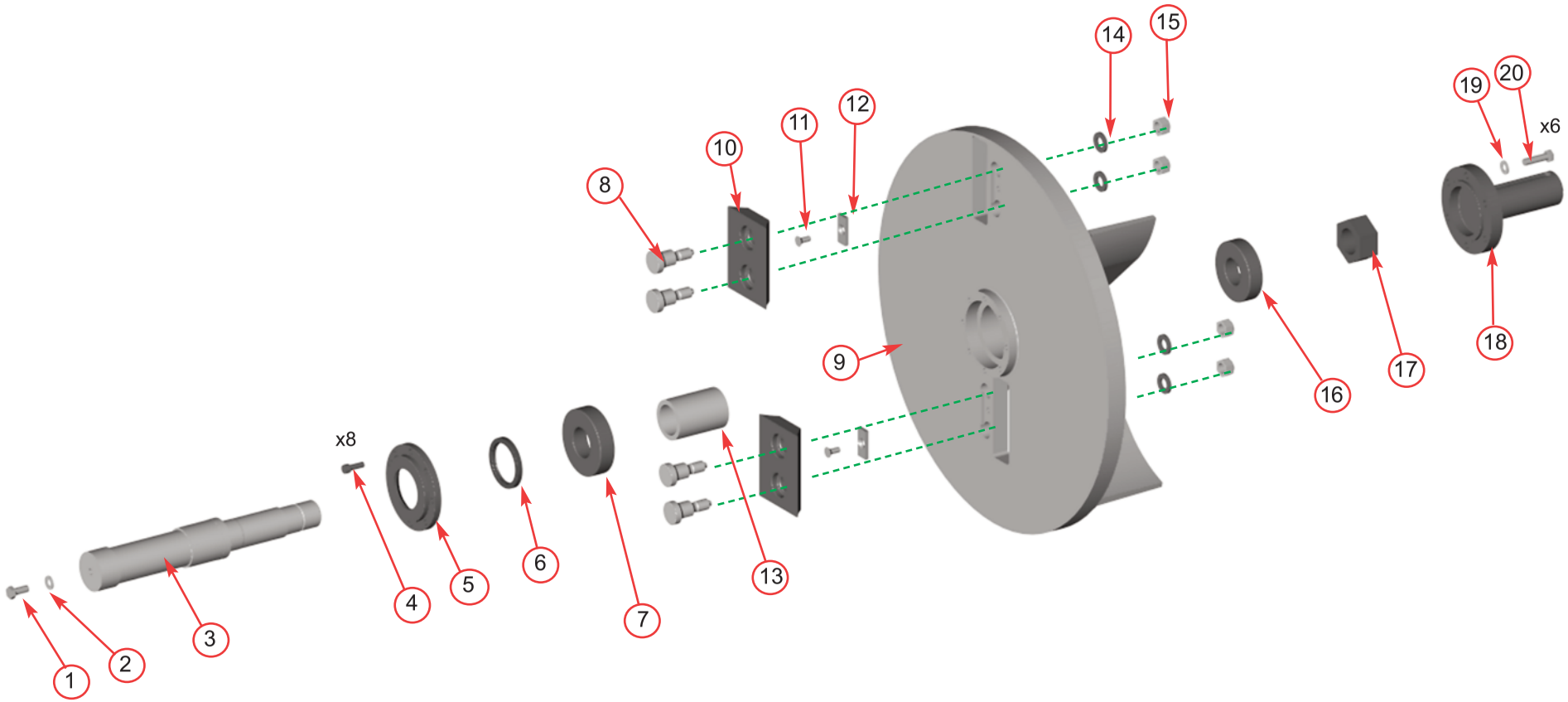

Item	Part No	Part Name	Q'ty
1	0360	M10/25 Bolt	1
2	0839	M10 C Washer	1
3	17350M	Rotor Shaft	1
4	1527	M8/25 Caphead	8
5	1937M	Bearing Cap	1
6	2943	Oil Seal	1
7	1939	Bearing 6309	1
8	18712M	Blade Bolt	2
9	18513M	Rotor Disc	1
10	18692MH	5" Blade	2

Item	Part No	Part Name	Q'ty
11	0355	M8/16 CSK Bolt	4
12	2902MS	Bolt Plate	2
13	1940MS	Bearing Spacer	1
14	1218	M16 Hardened Washer	4
15	1284	M16 T Nyloc Nut	4
16	1862	Bearing 6308	1
17	1893	Nut M39/4	1
18	2983MS	Drive Adapter	1
19	0701	M10 A Washer	6
20	4054	M10/35 Finethread Capheads	6

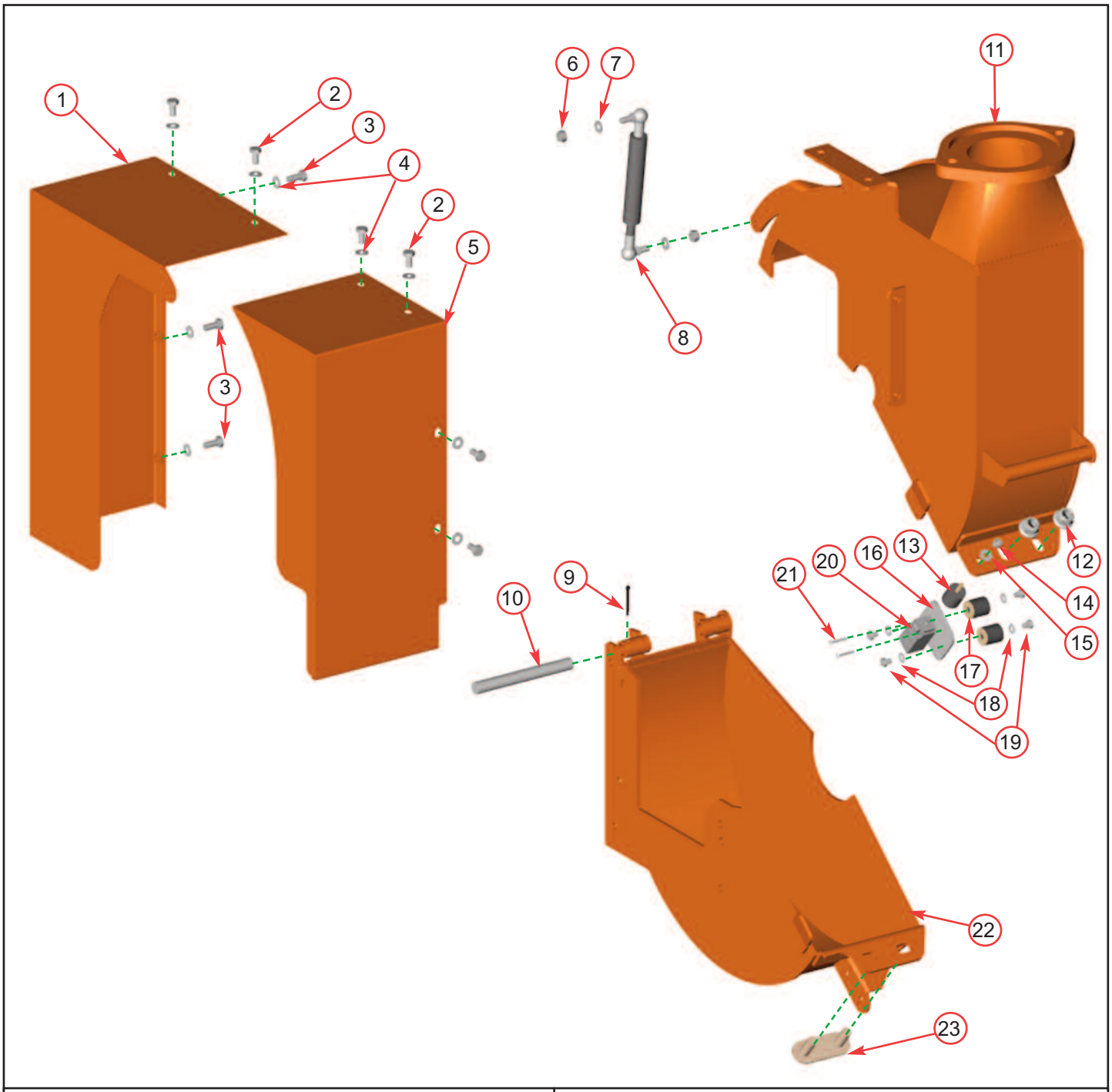

Item	Part No	Part Name	Q'ty
1	1906FO	Guard Roller Box Near Side	1
2	0878	M10/20 Bolt	6
3	0360	M10/25 Bolt	3
4	0839	M10 C Washer	9
5	1907FO	Guard Roller Box Off Side	1
6	0052	M10 T Nyloc Nut	2
7	0701	M10 A Washer	2
8	4066	Gas Spring Compression	1
9	0528	Split Pin	1
10	1943M	Pin Hinge 180 mm	1
11	18443FO	Rotor Housing Opening	1
12	2978S	M16 Flange Nut	2

Item	Part No	Part Name	Q'ty
13	0178	Rubber End Stop	1
14	0479	M8 P Nyloc Nut	1
15	0712	M8 C Washer	2
16	1691FS	Switch Back Plate	1
17	1868	M8 AV Mount	2
18	0711	M8 A Washer	4
19	1721	M8/10 Bolt	4
20	1348	Limit Switch	1
21	18168	M4/35 Pan Pozi	2
22	18442FO	Rotor Housing Fixed	1
23	2819FS	Fitting Bracket	1

TIMBERWOLF V-BELT TENSIONING DATA TABLE

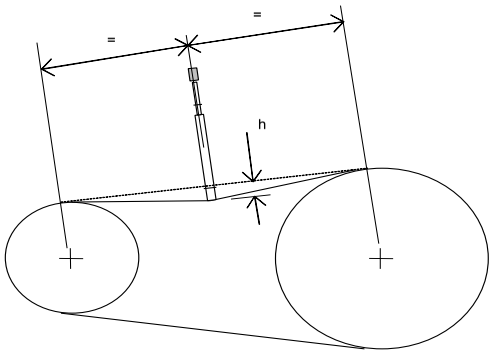

METHOD:

1. SET THE DEFLECTION DISTANCE ON THE LOWER SCALE OF THE TENSION GAUGE SO THAT THE UNDERSIDE OF THE 'O'-RING EQUALS THE 'h' VALUE GIVEN IN THE TABLE BELOW

2. ENSURE THAT THE DEFLECTION FORCE SCALE IS ZERO'D BY PUSHING THE UPPER 'O'-RING ALL THE WAY DOWN

3. PLACE THE TENSION GAUGE IN THE CENTRE OF THE BELT SPAN AS SHOWN IN THE DIAGRAM LEFT

4. PRESS DOWNWARDS ON THE RUBBER BUFFER, DEFLECTING THE BELT UNTIL THE UNDERSIDE OF THE LOWER O'-RING IS LEVEL WITH THE BELT BEHIND (USE A STRAIGHT EDGE IF THERE IS ONLY 1 BELT)

5. TAKE THE READING FROM THE DEFLECTION SCALE OF THE TENSION METER (READ AT THE LOWER EDGE OF THE 'O'-RING) & COMPARE THIS VALUE WITH THAT GIVEN IN THE TABLE BELOW

6. TIGHTEN OR LOOSEN BELTS AS REQUIRED FOLLOWING PROCEDURE GIVEN IN THE OPERATOR'S MANUAL

TENSION GAUGES ARE AVAILABLE FROM TIMBERWOLF SPARES, QUOTING PART No. 18091

TIPS ON BELT TIGHTENING:

A) THERE WILL NORMALLY BE A RAPID DROP IN TENSION DURING THE RUN-IN PERIOD FOR NEW BELTS. WHEN NEW BELTS ARE FITTED, CHECK THE TENSION EVERY 2-3 HOURS & ADJUST UNTIL THE TENSION REMAINS CONSTANT

B) THE BEST TENSION FOR V-BELT DRIVES IS THE LOWEST TENSION AT WHICH THE BELTS DO NOT SLIP OR RATCHET UNDER THE HIGHEST LOAD CONDITION

C) TOO MUCH TENSION SHORTENS BELT & BEARING LIFE

D) TOO LITTLE TENSION WILL AFFECT THE PERFORMANCE OF YOUR MACHINE ESPECIALLY IN RESPECT OF NO-STRESS DEVICES

E) ENSURE THAT BELT DRIVES ARE KEPT FREE OF ANY FOREIGN MATERIALS

F) IF A BELT SLIPS - TIGHTEN IT!

	TW MODEL No.:			13/75G	18/100G	125PH	230DHB	190TDHB	230VTR	190TFTR	190TVGTR	350DHB(t)	PTO100	PTO150	S426 SHREDDER	S426TFTR SHREDDER	PTO S426 SHREDDER	SX200 - ALL MODELS
ROTOR BELTS	Belt Mfr / Type			Gates Super HC-MN	Gates Super HC-MN	Gates Super HC-MN	Gates Super HC-MN	Gates Super HC-MN	Gates Super HC-MN	Gates Super HC-MN	Gates Super HC-MN	Gates Super HC-MN	Gates Super HC-	Gates Super HC-	Gates Super HC-MN	Gates Super HC-MN	Gates Super HC-MN	Gates Super HC-MN
	Belt Pitch Designation			SPA	SPA	SPA	SPA	SPA	SPA	SPA	SPA	SPB	SPA	SPA	SPB	SPB	SPB	SPA
	Belt Length			900.0	1060.0	1060.0	1232.0	1232.0	1232.0	1232.0	1232.0	2530.0	900.0	900.0	2120.0	2120.0	1700.0	1272.0
	Belt deflection	**=**	**h**	**4.0**	**4.0**	**3.5**	**4.0**	**4.0**	**4.0**	**4.0**	**4.0**	**8.0**	**4.0**	**4.0**	**8.0**	**8.0**	**6.0**	**5.0**
	Force reading (Kgf)	**New belt**		**3.4 - 3.6**	**3.1 - 3.3**	**3.3 - 3.6**	**3.9 - 4.1**	**3.9 - 4.1**	**3.9 - 4.1**	**3.9 - 4.1**	**3.9 - 4.1**	**3.3 - 3.6**	**3.3 - 3.5**	**3.8 - 4.0**	**3.3 - 3.5***	**3.3 - 3.5**	**6.5 - 6.9**	**1.9 - 2.1**
		Used belt		3.0 - 3.2	2.8 - 3.0	2.8 - 3.1	3.4 - 3.6	3.4 - 3.6	3.4 - 3.6	3.4 - 3.6	3.4 - 3.6	2.9 - 3.1	2.9 - 3.0	3.3 - 3.5	2.9 - 3.1*	2.9 - 3.1	5.6 - 6.0	1.7 - 1.8
PUMP BELT	Belt Mfr / Type			N/A	N/A	Gates Super HC-MN	N/A	N/A	Gates Super HC-MN	Gates Super HC-MN	Gates Super HC-MN	N/A	N/A	Gates Super HC-MN	N/A	Gates Super HC-MN	N/A	N/A
	Belt Pitch Designation					SPA			SPA	SPA	SPA			SPA		SPA		
	Belt Length					950.0			850.0	925.0	950.0			925.0		1060.0		
	Belt deflection	**=**	**h**			**4.0**			**4.0**	**4.0**	**4.0**			**4.0**		**4.0**		
	Force reading (Kgf)	**New belt**				**1.9 - 2.0**			**2.3 - 2.4**	**2.3 - 2.4**	**2.3 - 2.4**			**2.0 - 2.2**		**2.7 - 2.9**		
		Used belt				1.7 - 1.8			2.0 - 2.1	2.0 - 2.2	2.0 - 2.2			1.8 - 2.0		2.3 - 2.5		