EG4® WALLMOUNT ALLWEATHER BATTERY

USER MANUAL

© 2024 EG4 ELECTRONICS, LLC. ALL RIGHTS RESERVED.
VERSION 1.3.1 | INFORMATION SUBJECT TO CHANGE WITHOUT NOTICE.
MODEL #: WPOWER-16/280-AW

Intertek

TABLE OF CONTENTS

1. TECHNICAL SPECIFICATIONS SHEET 1
2. ABBREVIATIONS 3
3. SAFETY 4
   3.1 SAFETY INSTRUCTIONS 4
   3.2 IMPORTANT SAFETY NOTIFICATIONS 4
4. BRIEF INTRODUCTION 6
   4.1 PRODUCT DESCRIPTION 6
5. PACKING LIST 7
   5.1 BATTERY DIAGRAM 9
6. LOCATION SELECTION AND INSTALLATION 10
   6.1 POWERPRO CONDUIT BOX INSTALLATION 11
   6.2 INSTALLATION WITHOUT A CONDUIT BOX 14
   6.3 INSTALLATION WITH A CONDUIT BOX 15
   6.4 WITH EG4 18KPV INVERTER 17
7. GENERAL INSTALLATION 21
   7.1 BATTERY PARALLELING GUIDE 21
   7.2 BATTERY CABLE CONNECTIONS 22
   7.3 ADDITIONAL CONFIGURATIONS 23
8. EMERGENCY STOP (RSD, ESS DISCONNECT) 26
9. BATTERY COMMUNICATIONS 27
   9.1 DIP SWITCH ID TABLE 27
   9.2 LCD SCREEN 28
   9.3 COMMUNICATION PROTOCOL SELECTION 29
10. OPERATION GUIDE 31
   10.1 BMS TOOLS INSTALLATION AND INTERFACING 31
11. BATTERY CHARGING 34
   11.1 BATTERY PERFORMANCE CURVES 35
12. TROUBLESHOOTING, MAINTENANCE & DISPOSAL 36
   12.1 INTRODUCTION TO THE BMS 36
   12.2 BMS PROTECTION 36
   12.3 TROUBLESHOOTING 37
   12.4 BATTERY END OF LIFE 39
13. EG4 10 YEAR LIMITED WARRANTY 39
   13.1 WARRANTY EXCLUSIONS 39
14. STORAGE 40

1. TECHNICAL SPECIFICATIONS SHEET

MODULE OPERATING PARAMETERS		
Parameter	BMS	Recommended Settings
Total Energy Capacity	14.3kWh @25°C, 100% SOC	-
Voltage	51.2V	-
Capacity	280Ah ±2%	@25°C ±2°C @ 0.5C
Charging Voltage (Bulk/Absorb)	56.0V (±0.8V)	56.2V (±0.2V)
Float	-	54V (±0.2V)
SOC Cutoff	-	20%*
Charge Current	200A Max. Continuous	60 - 160A
Discharge Current	200A Max. Continuous	160A

BMS PARAMETERS			
Charge	Spec	Delay	Recovery
Cell Voltage Protection	3.8V	1 sec	3.45V
Module Voltage Protection	60V	1 sec	55.2V
Charge Over-Current 1	>205A	10 sec	-
Charge Over-Current 2	>225A	3 sec	-
Temperature Protection	<23°F or >158°F <-5°C or >70°C	1 sec	>32°F or <140°F >0°C or <60°C
Discharge	Spec	Delay	Recovery
Cell Voltage Protection	2.3V	1 sec	3.1V
Module Voltage Protection	44.8V	1 sec	48V
Discharge Over-Current 1	>205A	10 sec	60 sec
Discharge Over-Current 2	>300A	3 sec	60 sec
Short Circuit	2000A	0.1 ms	-
Temperature Protection	<-4°F or >167°F <-20°C or >75°C	1 sec	>14°F or <149°F >-10°C or <65°C
PCB Temperature Protection	>230°F (>110°C)	1 sec	@ <176°F (<80°C)

GENERAL SPECIFICATIONS			
Parameter	Spec		Condition
Cell Balance	120mA	Passive Balance	Cell Voltage Difference >40mV
Temperature Accuracy	3%	Cycle Measurement	Measure Range: -40°F – ≈212°F (-40°C – ≈100°C)
Voltage Accuracy	0.5%	Cycle Measurement	Cells & Module
Current Accuracy	3%	Cycle Measurement	Measure Range: -200 – 200A
SOC	5%		Integral Calculation
Power Consumption (Standby)	<300uA		Standby/Storage
Power Consumption (Operating)	<25mA		Charging/Discharging
Communication Ports	RS485/CAN		Customizable

BATTERY HEATER SPECIFICATIONS		
Parameter	Spec	Condition
Voltage	56V	-
Power Consumption	224W	-
Internal Battery Temperature	≤32°F (0°C) or ≥41°F (5°C)	Heat On/Heat Off

ENVIRONMENTAL PARAMETERS	
Charging Range	32° to ≈113°F (0°C to ≈45°C)
Discharging Range	-4°F to ≈122°F (-20°C to ≈50°C)
Storage Range	-4°F to ≈122°F (-20°C to ≈50°C)
Ingress Protection	IP65
PHYSICAL SPECIFICATIONS	
Dimensions (H × W × D)	34.6 × 22.3 × 9.1 in. (88 × 56.6 × 23.2cm)
Weight	308.6 lbs. (140 kg)
Design Life	>15 years
Cycle Life	>8000 Cycles @ 0.5C 80% DOD
Lifetime Production	82.6MWh**

**EG4 recommends this value be set no lower than 20% to maintain the recommended 80% depth of discharge.*

***(51.2V×280Ah/1000×80%×8000 cycles/1000)90%=MWh*

2. ABBREVIATIONS

- AWG – American Wire Gauge
- A – Amps
- Ah – Amp hour(s)
- AC – Alternating Current
- AFCI – Arc-Fault Circuit Interrupter
- AHJ – Authority Having Jurisdiction
- kAIC – kilo-Amp Interrupting Capability
- ANSI – American National Standards Institute
- BAT – Battery
- BMS – Battery Management System
- COM – Communication
- CT – Current Transformer
- DC – Direct Current
- DIP – Dual In-line Package
- DOD – Depth of Discharge
- EG – Equipment Ground
- EGS – Equipment Grounding System
- EMC – Electromagnetic Compatibility
- EPS – Emergency Power System
- ESS – Energy Storage System
- E-Stop – Emergency Stop
- FCC – Federal Communication Commission
- GE – Grounding Electrode
- GEC – Grounding Electrode Conductor
- GFCI – Ground Fault Circuit Interrupter
- GFDI – Ground Fault Detector/Interrupter
- Imp – Maximum Power Point Current
- IEEE – Institute of Electrical and Electronic Engineers
- IP – Ingress Protection
- Isc – Short-Circuit Current
- In-lbs. – Inch Pounds
- kW – Kilowatt
- kWh – Kilowatt-hour
- LCD – Liquid Crystal Display
- LFP – Lithium Iron Phosphate
- L1 – Line 1
- L2 – Line 2
- mm – Millimeters
- MPPT – Maximum Power Point Tracking
- mV – Millivolt
- N – Neutral
- NEC – National Electric Code
- NEMA – National Electrical Manufacturers Association
- NFPA – National Fire Prevention Association
- Nm – Newton Meters
- NOCT – Normal Operating Cell Temperature
- PC – Personal Computer
- PCB – Printed Circuit Board
- PE – Protective Earth
- PPE – Personal Protective Equipment
- PV – Photovoltaic
- RSD – Rapid Shut Down
- SCC – Standards Council of Canada
- SOC – State of Charge
- STC – Standard Testing Conditions
- UL – Underwriters Laboratories
- UPS – Uninterrupted Power Supply
- V – Volts
- VOC – Open-Circuit Voltage
- VMP – Voltage Maximum Power

3. SAFETY

3.1 SAFETY INSTRUCTIONS

International safety regulations have been strictly observed in the design and testing of the battery. Before beginning any work, carefully read all safety instructions, and always observe them when working on or with the battery. The installation must follow all applicable national or local standards and regulations.

Incorrect installation may cause:

- injury or death to the installer, operator or third party
- damage to the battery or other attached equipment

3.2 IMPORTANT SAFETY NOTIFICATIONS

DANGER! ***Hazardous Voltage Circuits!***
AVERTISSEMENT! ***Circuits à tension élevée!***

There are various safety concerns that must be carefully observed before, during, and after the installation, as well as during future operation and maintenance. The following are important safety notifications for the installer and any end users of this product under normal operating conditions.

1. **Beware of high PV voltage.** Please install an external DC disconnect switch or breaker and ensure it is in the “off” or “open” position before installing or working on the battery. Use a voltmeter to confirm there is no DC voltage present to avoid electric shock.
2. **Beware of high grid voltage.** Please ensure the AC switch and/or AC breaker are in the “off” or “open” position before installing or working on the battery. Use a voltmeter to confirm there is no voltage present to avoid electric shock.
3. **Beware of high battery current.** Please ensure that the battery module breakers and/or on/off switches are in the “open” or “off” position before installing or working on the battery. Use a voltmeter to confirm there is no DC voltage present to avoid electric shock.
4. **Do not open the battery while it is operating** to avoid electric shock and damage from live voltage and current within the system.
5. **Do not make any connections or disconnections (PV, battery, grid, communication, etc.) while the battery is operating.**
6. An installer should make sure to be well protected by reasonable and professional insulative equipment [e.g., personal protective equipment (PPE)].
7. Before installing, operating, or maintaining the system, it is important to inspect all existing wiring to ensure that it meets the appropriate specifications and conditions for use.
8. Ensure that the PV, battery, and grid connections to the inverter are secure and proper to prevent damage or injuries caused by improper installation.

WARNING: *To reduce the risk of injury, read all instructions*

All work on this product (system design, installation, operation, setting, configuration, and maintenance) must be carried out by qualified personnel. To reduce the risk of electric shock, do not perform any servicing other than those specified in the operating instructions unless qualified to do so.

1. Read all instructions before installing. For electrical work, follow all local and national wiring standards, regulations, and these installation instructions.
2. Make sure the battery is properly grounded. All wiring should be in accordance with the National Electrical Code (NEC), ANSI/NFPA 70.
3. The battery and system can inter-connect with the utility grid only if the utility provider permits. Consult with the local AHJ (Authority Having Jurisdiction) before installing this product for any additional regulations and requirements for the area.
4. All warning labels and nameplates on this battery should be clearly visible and must not be removed or covered.
5. The installer should consider the safety of future users when choosing the battery's correct position and location as specified in this manual.
6. Please keep children away from touching or misusing the battery and relevant systems.
7. **Beware!** The battery and some parts of the system can be hot when in use, please do not touch the battery's surface or most of the parts when they are operating. During operation, only the LCD and buttons should be touched.

4. BRIEF INTRODUCTION

Battery Features

- Constant rated output current of 200A
- IP65 all-weather rated, integrated self-heating during low ambient temperatures
- Smart balancing of cells enhancing the battery consistency and the lifespan up to 15 years of life with over 8000 cycles at 80% DOD at 0.5C
- Built-in intelligent BMS with battery voltage, current, temperature, and health management to reduce electrical risks and overheating
- Internal busbars rated to 600 Amps for paralleling multiple batteries and feeding multiple inverters
- Real time monitoring and LCD screen to display battery voltage, current, temperature, SOC in detail
- Integrated E-stop circuit supports emergency stop function with remote Rapid Shutdown Initiator (RSD) or Energy Storage Systems (ESS) disconnect or by inverter's RSD or ESS terminals
- Communicate with inverter using CAN or RS485. Firmware update using RS485
- Plug-and-play cable installation with the use of the 250A weather-tight quick connectors
- Stable, reliable, and maintenance-free battery pack
- Comprehensive safety UL9540A, UL1973 on cell and module level with enhanced onboard fire-extinguishing modules

4.1 PRODUCT DESCRIPTION

The EG4 48V WallMount All Weather 280Ah batteries are ideal for low-voltage residential outdoor energy storage system (ESS) applications. These batteries use lithium iron phosphate ($LiFePO_4$ or LFP) cells with the highest safety performance and an intelligent Battery Management System (BMS) that can monitor and record the voltage of each cell, along with the current, voltage, and temperature of the module in real-time. The BMS also contains a passive balance function and an advanced battery control method, both of which improve the performance of the battery pack. For enhanced security, the battery has two onboard fire-extinguishing modules. With a design life of more than 15 years, the WallMount is designed to last over 8000 cycles at 80% DOD at 0.5C°.

5. PACKING LIST

The items listed below are <u>included</u> with the purchase:

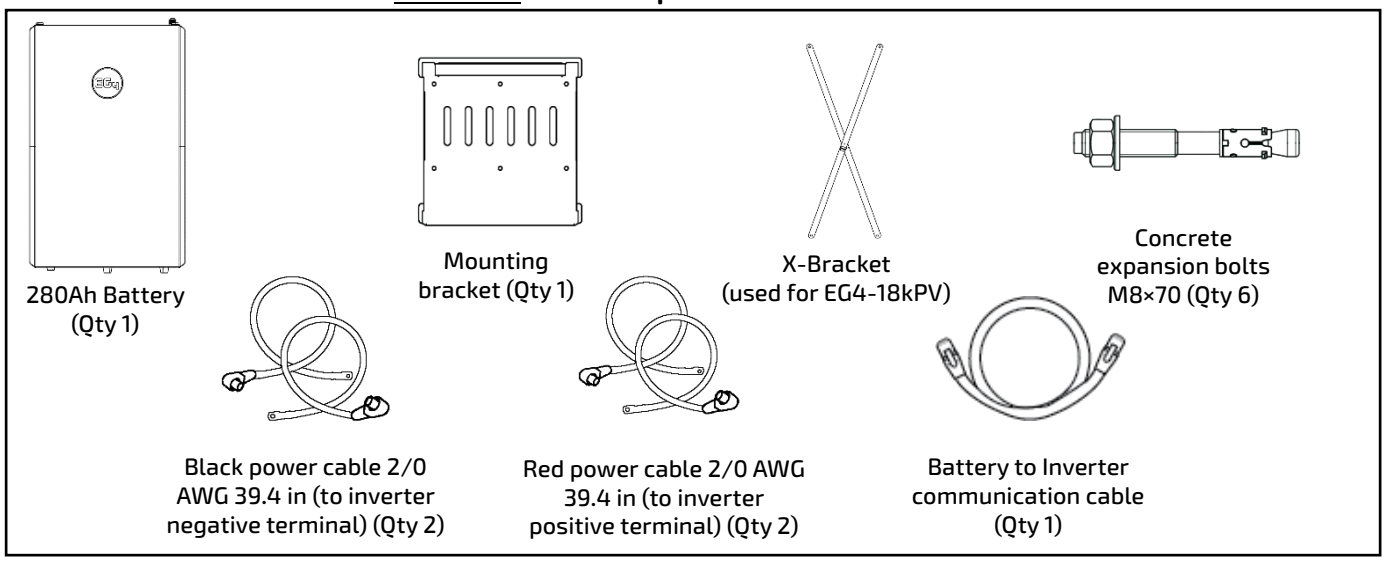

Figure 1 – Packing List

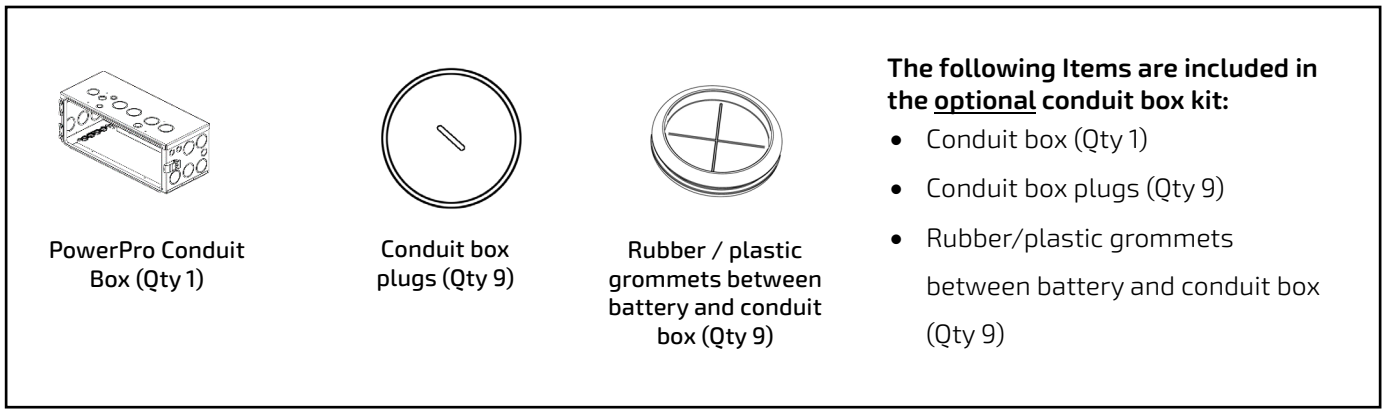

Figure 2 – Conduit Box Packing List

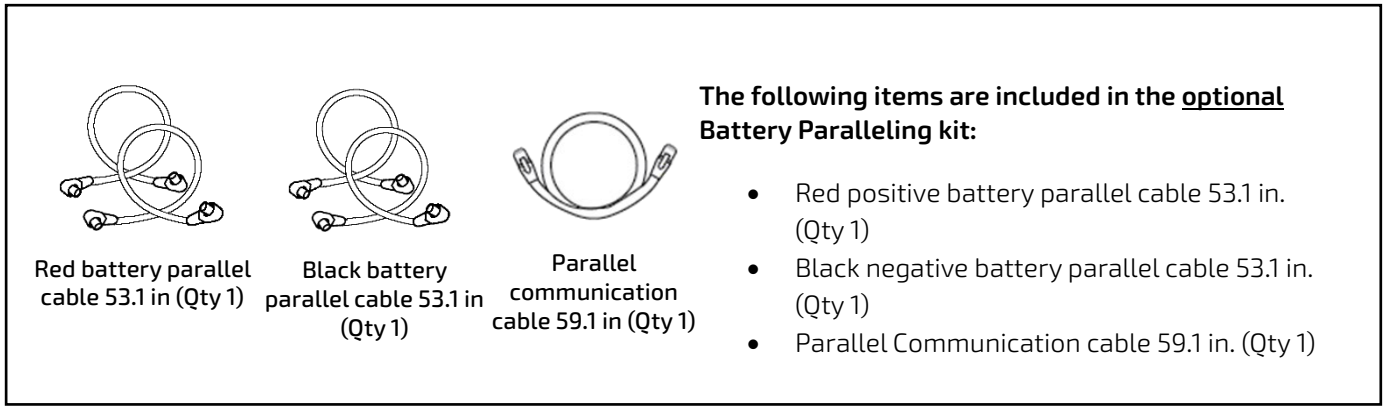

Figure 3 – Parallel Kit Packing List

Battery Overview

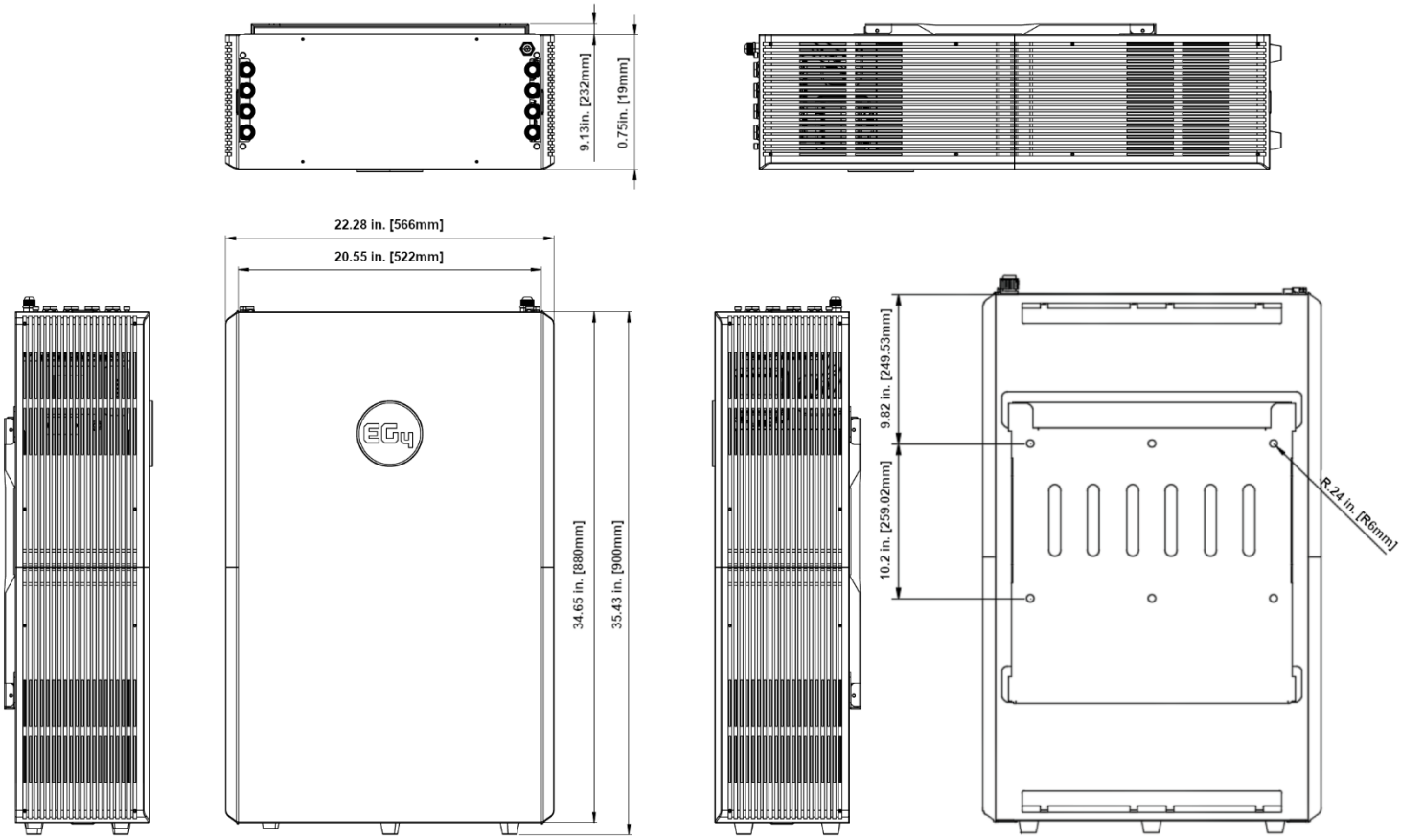

Figure 4 – Battery Cross-Sectional View

DANGER: When installing or removing battery, ensure battery is in the off position, and use a voltmeter to confirm there is no voltage present. This will prevent users from encountering live (powered) terminals by accident.
Failure to do so can result in sever injury and/or death.

5.1 BATTERY DIAGRAM

It is highly recommended to install the battery with at least 12-inch clearance on each side of the battery (back and front sides excluded) to easily access the side panel.

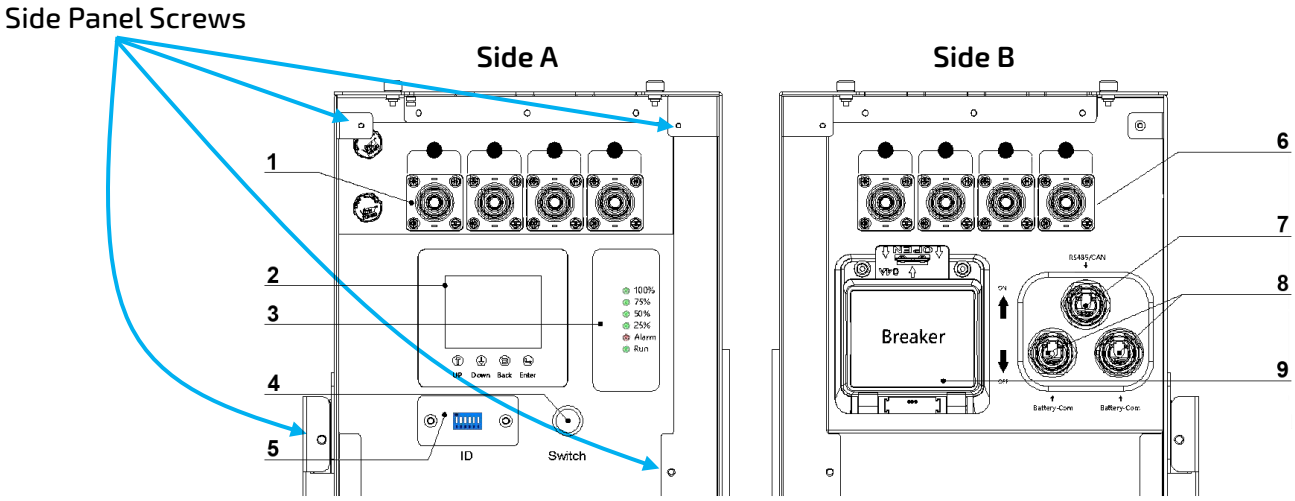

Figure 5 – Battery (side view)

NOTE: *Additional hardware **may** be required to remove the side terminal covers. EG4 recommends a Phillips head screwdriver to remove said screws.*

NO.	ITEM	DESCRIPTION	REMARKS
1	Negative Terminals	Connects to negative terminal of Inverter and/or paralleled battery	
2	LCD Screen	Shows battery information	
3	SOC Display	State of Charge LED	
4	Power Switch	Turns BMS on/off	
5	ID/DIP Switch	DIP Switch board for BMS	
6	Positive Terminal	Connects to positive terminal of Inverter and/or paralleled battery	
7	RS485/CAN Port	RS485/CAN Communication Interface	Pin 1 & Pin 8 – RS485_B Pin 2 & Pin 7 – RS485_A Pin 4 – CAN_H Pin 5 – CAN_L
8	Battery-Comm	Parallel battery Communication Port	Pin 1 & Pin 8 – RS485_B Pin 2 & Pin 7 – RS485_A Pin 3 & Pin 6 – E-Stop NO
9	Battery Disconnect Breaker	Turns power supply on/off	Double Pole Single Throw 125 Frame size 125A Rating*

***NOTE:** *The battery disconnect breaker is 2 single pole breakers with a singular switch, paralleled together to reach a 250A rating.*

6. LOCATION SELECTION AND INSTALLATION

WARNING

- **Do not put these batteries in series.** The BMS and internal components are not designed to handle this setup, which could cause the modules to fail.
- The WallMount battery is heavy. Use a lift or other equipment to lift and carry the unit.
- The battery can be installed against a flat wall, but the weight of the battery should not be fully supported by the wall. To help with this requirement, the battery comes with pre-installed feet that should be used to allow some of the weight of the battery to rest on the ground.
- If the battery is installed against a wall, EG4 *insists* the wall to be made of non-combustible material. If this is not possible, then the unit **MUST** have a minimum of 2 in. (50.8mm) of clearance from the wall to prevent heat transfer to the wall surface. Also note that whatever mounting solution that is used to grant the 2 in. clearance from the wall **MUST** be a non-combustible material.
- If installing on flat ground as a standalone unit, ensure there is proper drainage on the ground surrounding the battery to maintain integrity of the module over time and prevent damage from flooding. If installing against a wall, ensure at least a 12 in. gap on each side of the unit for adequate airflow and operations.
- Always mount the battery in an upright position.

NOTE: The battery will be shipped with temporary lifting handles for removing the battery from its packaging. See image below for location. EG4 recommends removing the handles before connecting any wiring to the battery.

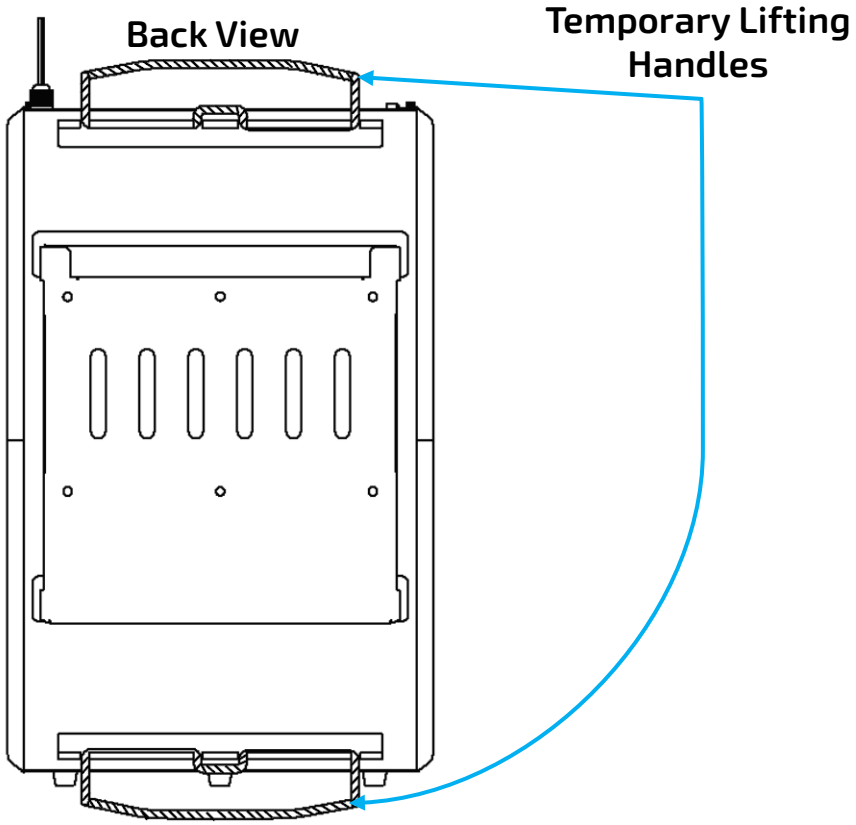

Figure 6 – Battery Lifting Handles

- Ensure at least 12 in. between multiple WallMount batteries and other devices unless it is installed as a part of PowerPro WallMount ESS that includes the EG4-18kPV with the conduit box. In a PowerPro WallMount ESS installation, the conduit box is attached directly to both battery and inverter.
- Please follow NEC and other local codes while installing the product.

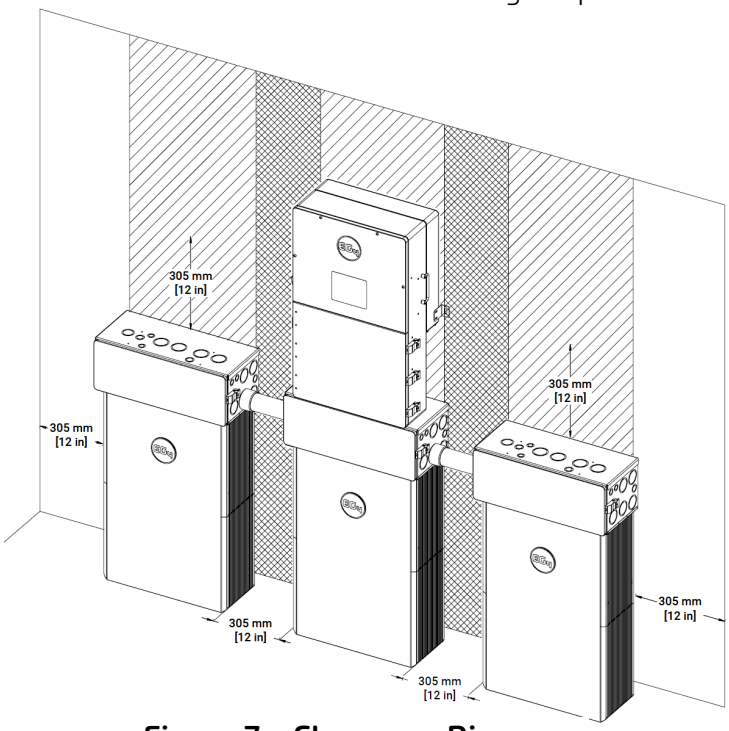

Figure 7 – Clearance Diagram

The battery can be installed in multiple different configurations:

1. Installation without a conduit box (Sec 7.2)
2. Installation with a conduit box (Sec 7.3)
3. Installation with EG4 18kPV inverter (Sec 7.4)

Refer to Section 7.3 for multiple battery installations with multiple EG4-18kPV units.

6.1 POWERPRO CONDUIT BOX INSTALLATION

The conduit box is a highly recommended accessory for the battery to retain all the cables inside an enclosure for added protection and safety. The conduit box holds both the conduits and wires that are running between the inverter and the battery.
Each conduit box comes with 8 thumb screws that can be used to attach the inverter and the battery.

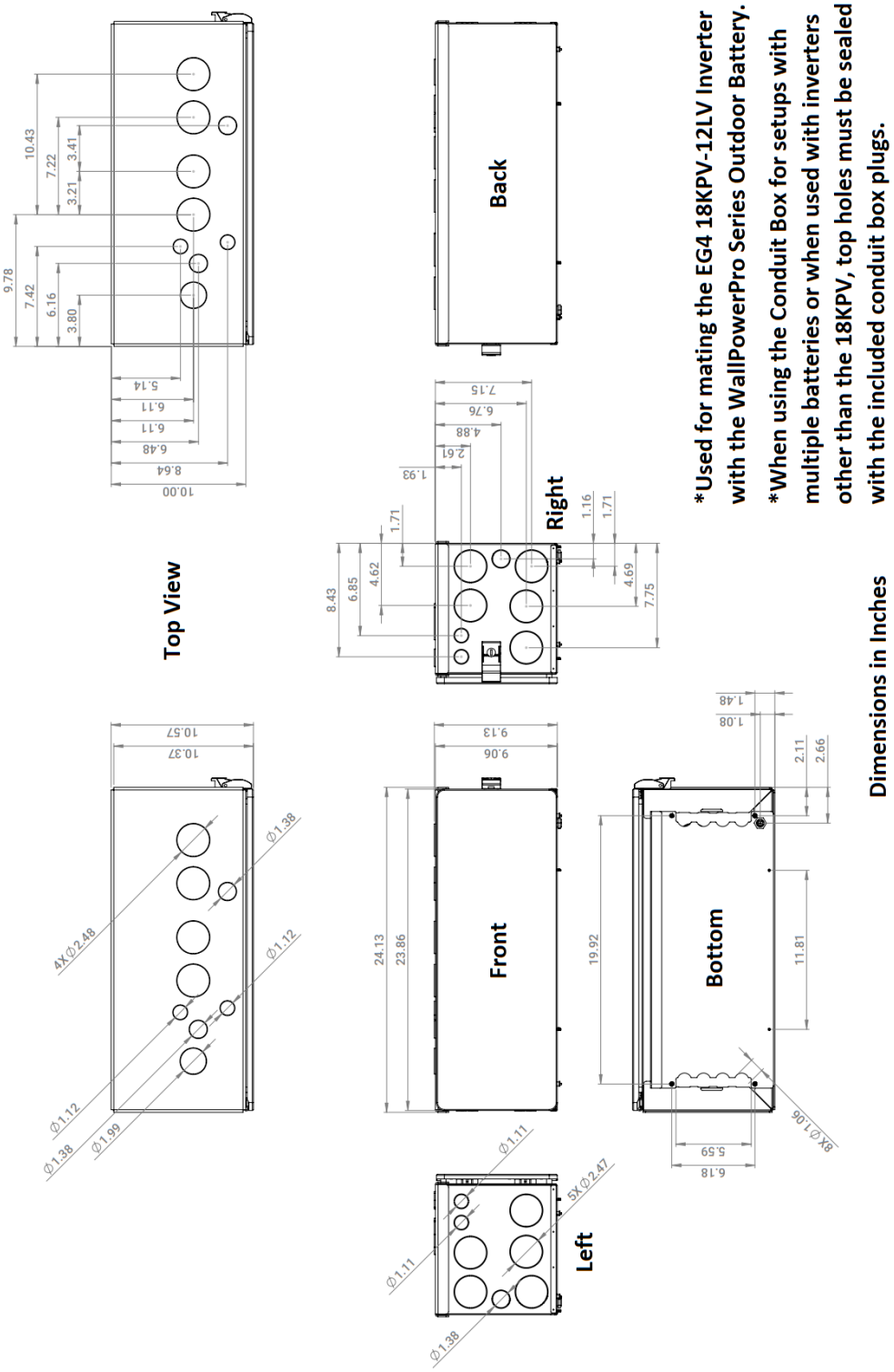

Figure 8 – Conduit Box Schematics

Step 1: Identify the four screw locations that attach to the battery (**Figure 9**). Place the conduit box on top of the battery and use the provided thumb screws to tighten the conduit box to the battery.

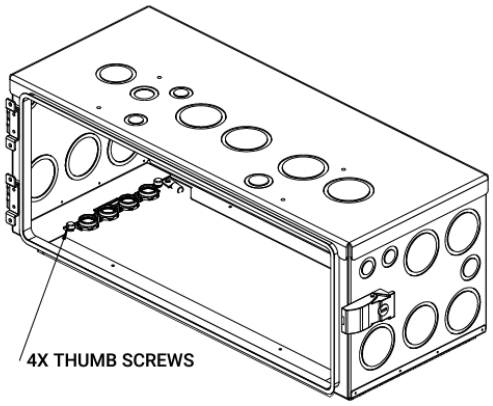

Figure 9 – Conduit Box Thumb Screws

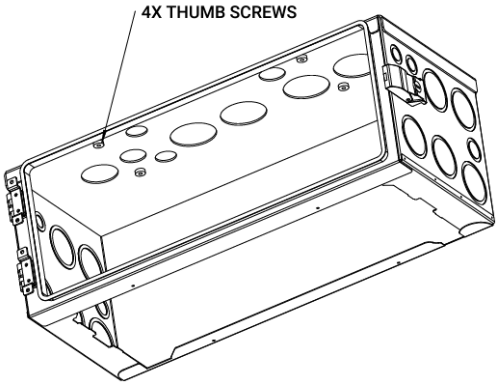

Figure 10 – Conduit Box Thumb Screws

Step 2: If installing the WallMount along with the 18kPV inverter (Sec 7.4), please use the remaining 4 thumb screws on the top side of the conduit box to secure it to the inverter, as shown in **Figure 10.**

If installing the WallMount as an additional battery or along with non-EG4 18kPV inverter (Section 7.3), please use the plugs to cover the top holes on the conduit box. Refer to **Figure 11**.

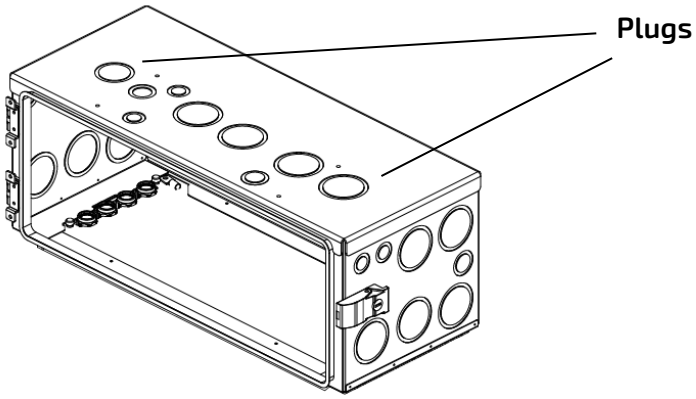

Figure 11 – Conduit Box Plug Location

6.2 INSTALLATION WITHOUT A CONDUIT BOX

CAUTION: ALWAYS MOUNT THE BATTERY IN AN UPRIGHT POSITION!

Mounting Instructions

1. Place mounting bracket on wall at proper mounting height (min. 28.0625 in) from the ground; use a level to make sure the bracket is straight, and mark mounting hole locations. Drill holes to accommodate mounting hardware being used.

Note: The mounting bracket at 28.065 in. from the ground makes the battery sit on the ground.

2. Secure mounting bracket to the wall using the included expansion bolts (concrete/brick walls) or appropriate hardware required for the mounting surface.

Note: *If **not** mounting into concrete or brick using the included expansion bolts, ensure bolts are mounted into both studs or other supportive material. The battery is 300lbs, please ensure full mounting support.*

3. Attach the WallMount battery pack to the mounting bracket. To accomplish this, lift the battery up and hook the flange on the back of the battery into the flange on the front of the mounting bracket. Secure the battery to the mounting bracket with the 4 included side screws (see Figure 12)

Note: *The battery is very heavy. Please use the team lift technique to prevent damage to personnel and/or equipment*

4. Finally, properly ground the battery, attaching a grounding conductor to the M6 grounding screw on top of the battery to the Equipment Grounding System.

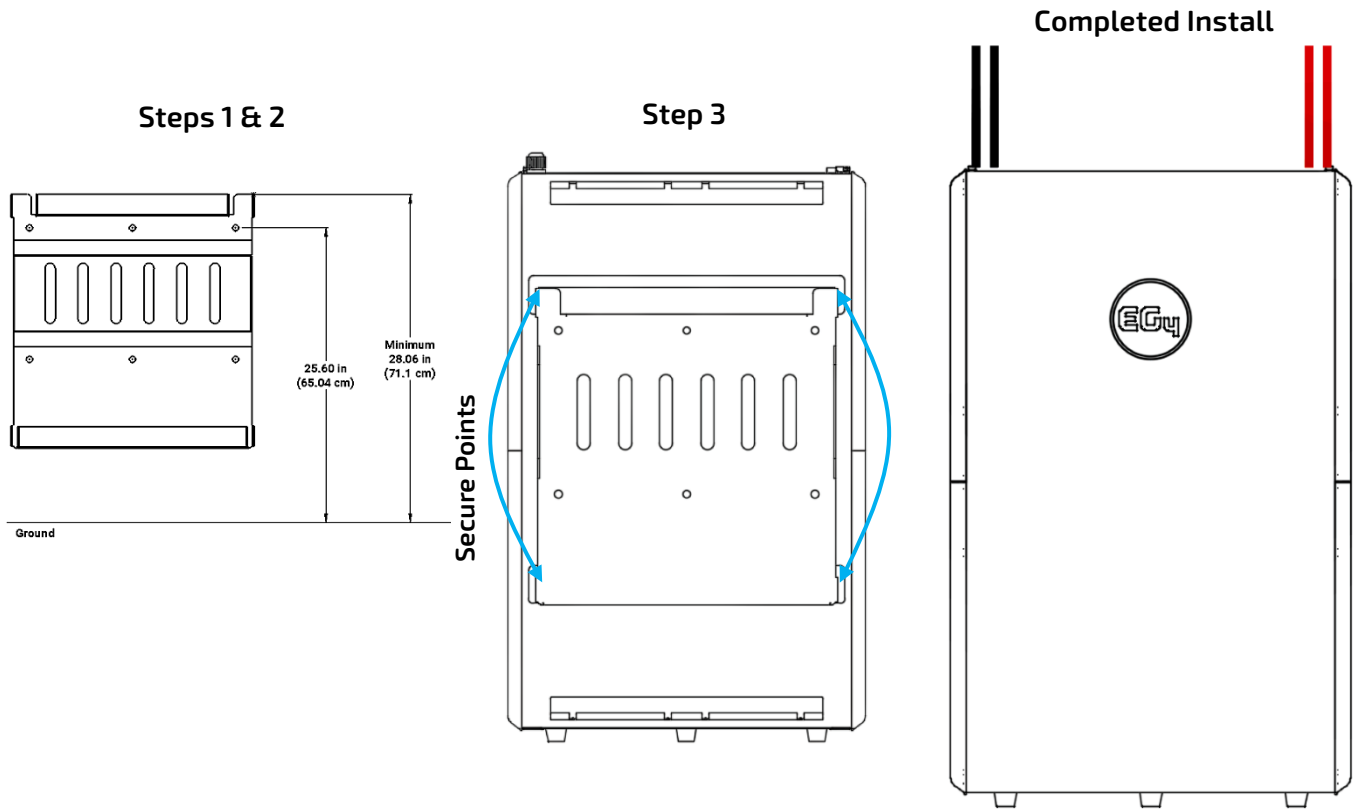

Figure 12 – WallMount Installation without Conduit Box

6.3 INSTALLATION WITH A CONDUIT BOX

Attach the conduit box (sold separately) to the top of the WallMount battery using the included hardware. Refer to Section 7.1 for the conduit box installation instructions.

CAUTION: ALWAYS MOUNT THE BATTERY IN AN UPRIGHT POSITION!

Mounting Instructions

1. Place mounting bracket on wall at proper mounting height (minimum 28.0625 in) from the ground; use a level to make sure the bracket is straight, and mark mounting hole locations. Drill holes to accommodate mounting hardware being used.

   Note: *The mounting bracket at 28.065 in. from the ground makes the battery sit on the ground.*

2. Secure mounting bracket to the wall using the included expansion bolts (concrete/brick walls) or appropriate hardware required for the mounting surface.

   Note: *If **not** mounting into concrete or brick using the included expansion bolts, ensure bolts are mounted into both studs or other supportive material. The battery is 300lb, please ensure full mounting support.*

3. Attach the WallMount battery pack to the mounting bracket. To accomplish this, lift the battery up and hook the flange on the back of the battery into the flange on the front of the mounting bracket. Secure the battery to the mounting bracket with the 4 included side screws (see Figure 14)

   Note: *The battery is very heavy. Please use the team lift technique to prevent damage to personnel and/or equipment*

4. Attach the conduit box (sold separately) to the top of the WallMount battery using the included hardware.
5. Finally, properly ground the battery, attaching a grounding conductor to the M6 grounding screw on top of the battery to the Equipment Grounding System.

Steps 1 & 2

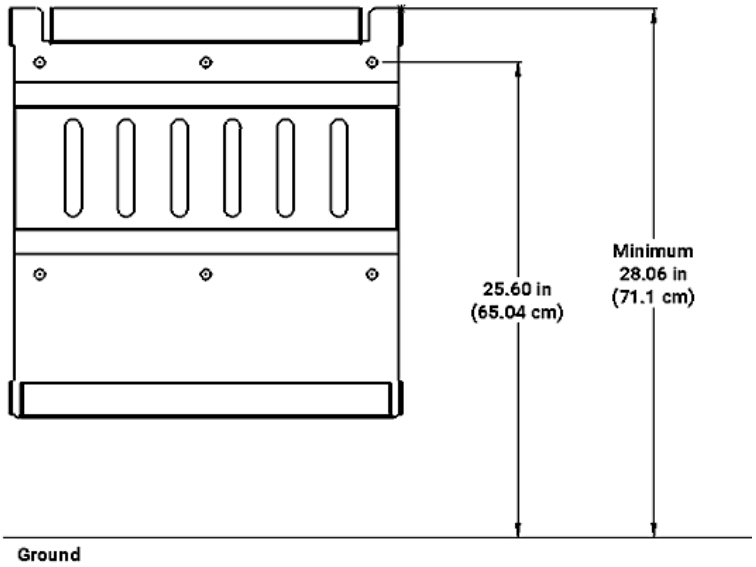

Figure 13 – WallMount Installation with Conduit Box Steps 1 & 2

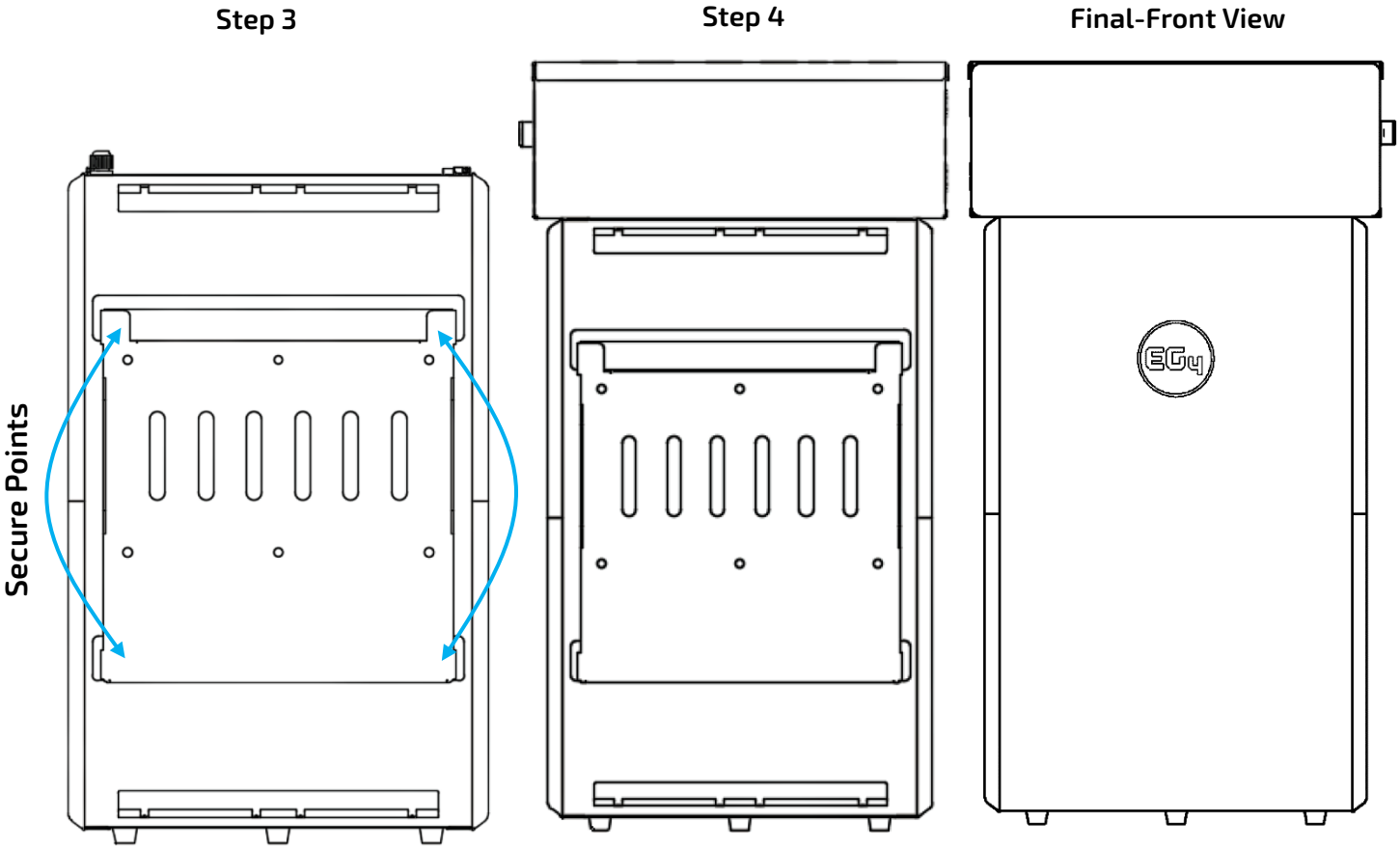

Figure 14 – WallMount Installation with Conduit Box Steps 3, 4 & 5

6.4 WITH EG4 18KPV INVERTER

CAUTION: ALWAYS MOUNT THE BATTERY IN AN UPRIGHT POSITION!

Mounting Instructions with EG4 18kPV (See diagrams on following pages)

Note: *If **not** mounting into concrete or brick using the included expansion bolts, ensure bolts are mounted into both studs or other supportive material. The battery is 300lb, please ensure full mounting support.*

1. Place mounting bracket on wall at proper mounting height (Min. 28.0625 in.) from the ground; use a level to make sure the bracket is straight, and mark mounting hole locations. Drill holes to accommodate mounting hardware being used.

Note: The mounting bracket at 28.065in from the ground makes the battery sit on the ground.

2. Align the provided X-bracket with the holes on the mounting bracket and secure both to the wall, using the included expansion bolts (concrete/brick walls) or appropriate hardware required for the mounting surface. The X-bracket will be behind the mounting plate, against the wall.
3. Using the X-bracket as a guide, attach the EG4 18kPV mounting bracket using the appropriate hardware required for the mounting surface.
4. Attach the WallMount battery pack to the mounting bracket. To accomplish this, lift the battery up and hook the flange on the back of the battery into the flange on the front of the mounting bracket. Secure the battery to the mounting bracket with the 4 included side screws (see Figure 16).

Note: *The battery is very heavy. Please use the team lift technique to prevent damage to personnel and/or equipment*

5. Attach the conduit box (sold separately) to the top of the WallMount battery using the included hardware.
6. Attach the 18kPV to the inverter mounting bracket making sure that the holes of the inverter align with the conduit box and secure to each other with the included hardware.
7. Finally, properly ground the battery, attaching a grounding conductor to the M6 grounding screw on top of the battery to the Equipment Grounding System.

Step 1 (front view)

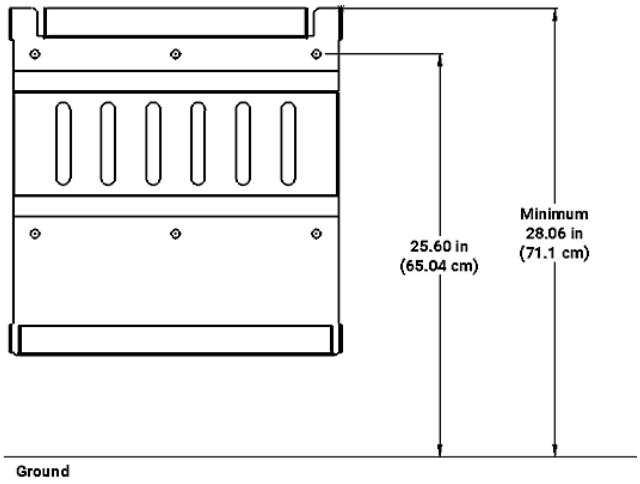

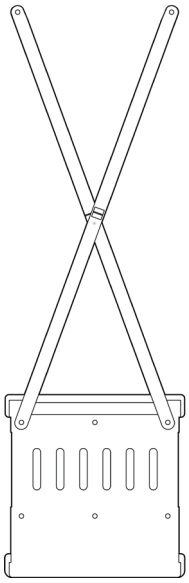

Figure 15 – WallMount Installation with Conduit Box & 18kPV Steps 1 & 2

Step 3 (back view)

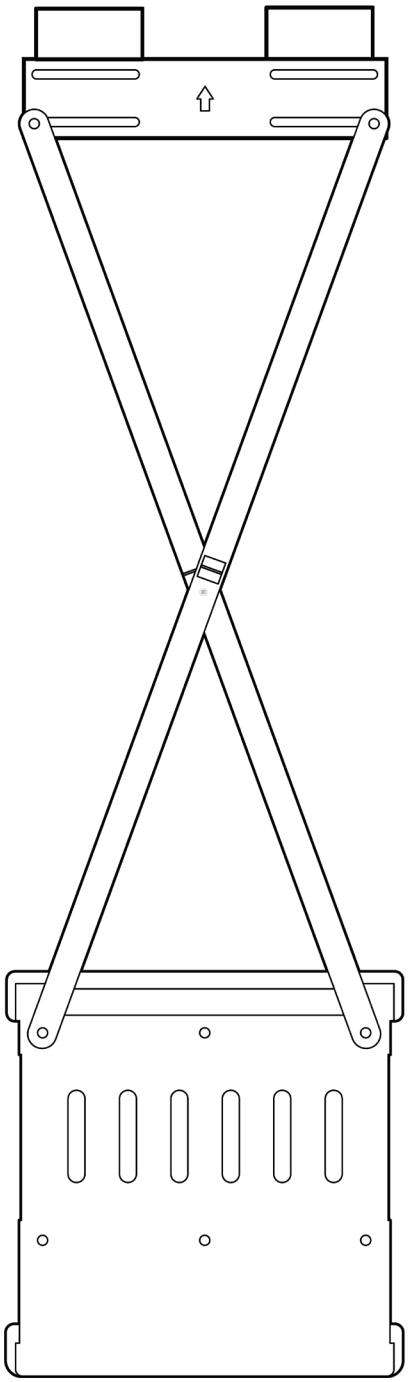

Step 4 (back view)

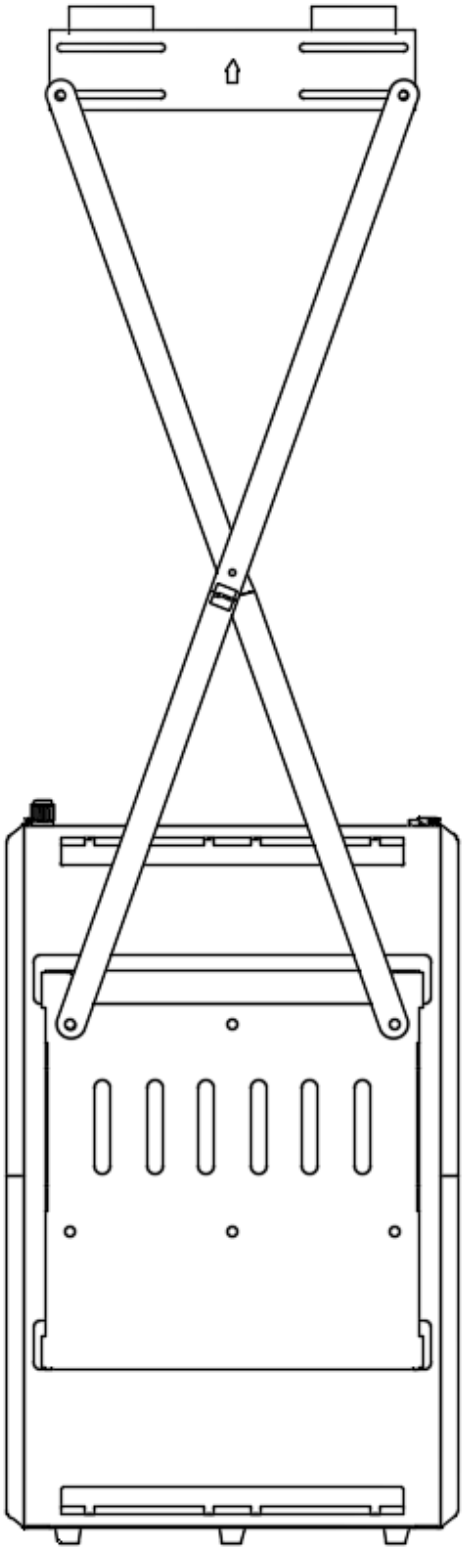

Figure 16 – WallMount Installation with Conduit Box & 18kPV Steps 3 & 4

Step 5 (back view)

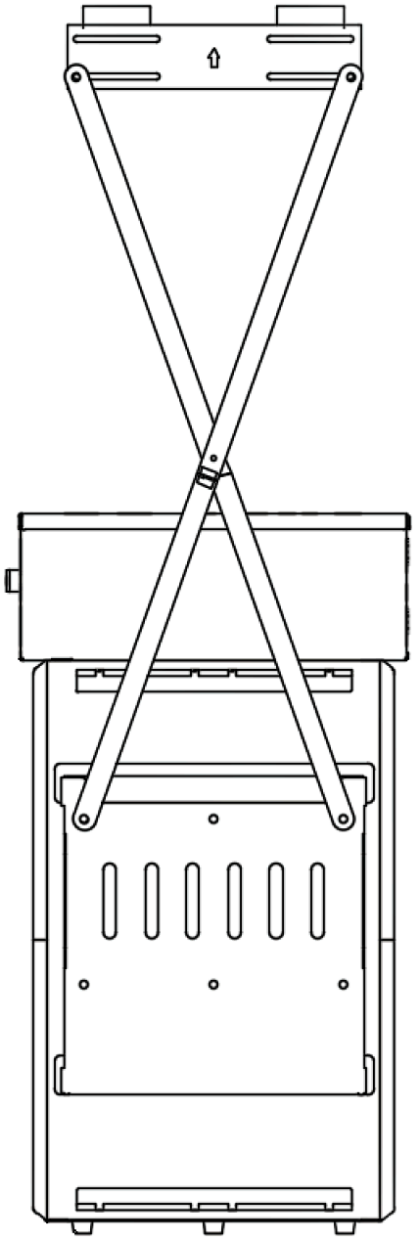

Step 6 (back view)

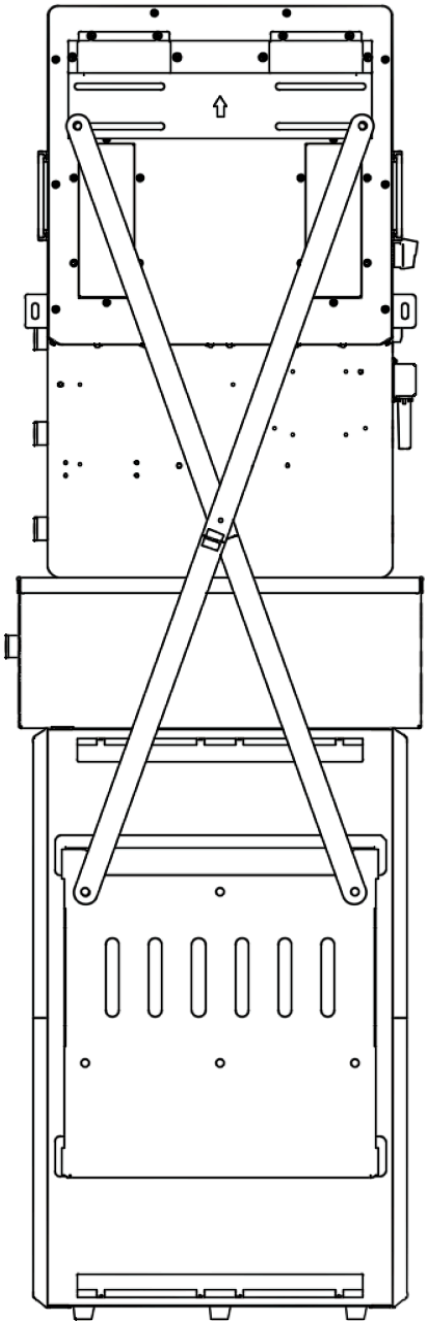

Figure 17 – WallMount Installation with Conduit Box & 18kPV Steps 5 & 6

Final - Front View w/ Dimensions

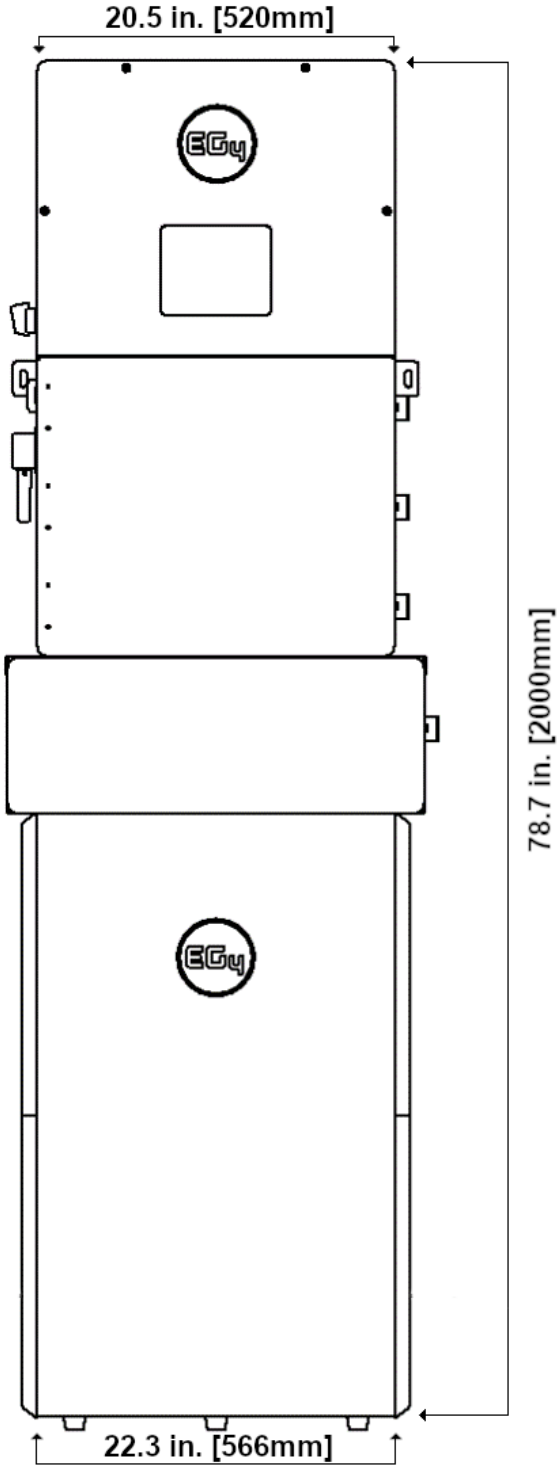

Figure 18 – WallMount Installation with Conduit Box & 18kPV Final

7. GENERAL INSTALLATION

WARNING

*Be sure the battery packs are powered **"OFF"** before making/removing any connections.*

Use the two included sets of 2/0 AWG (70mm) outdoor rated positive and negative battery cables with the outdoor rated connectors. The connectors will "click" when seated properly.

Note: *To remove the circular connector installed on the battery, first press the release button on the side of the connector, then slowly pull until the connection is broken.*

When paralleling batteries, use one set of 2/0 AWG (70mm) positive and negative battery cables with outdoor rated connectors on both ends to connect battery to battery. These cables are available from the distributor as a paralleling kit.

When paralleling batteries, use a communication cable to attach the master battery to additional batteries for battery-to-battery communication. This cable is also available from the distributor in the paralleling kit.

NOTE: When installing multiple batteries or adding a battery to an existing rack, please ensure all batteries are charged to 100% before paralleling together. This step is crucial to optimize battery performance and ensure proper operation.

7.1 BATTERY PARALLELING GUIDE

1. Ensure all battery breakers and BMS are OFF.
2. Set the address code of each battery according to the DIP Switch ID Table *(see Section 10.1: DIP Switch ID Table)*, making sure there are no duplicate addresses.
3. Set up communication between the batteries via the "*Battery-Comm*" ports of each battery. Use the paralleling kit communication cable to daisy chain all paralleled batteries in the bank together. See diagram below for example.

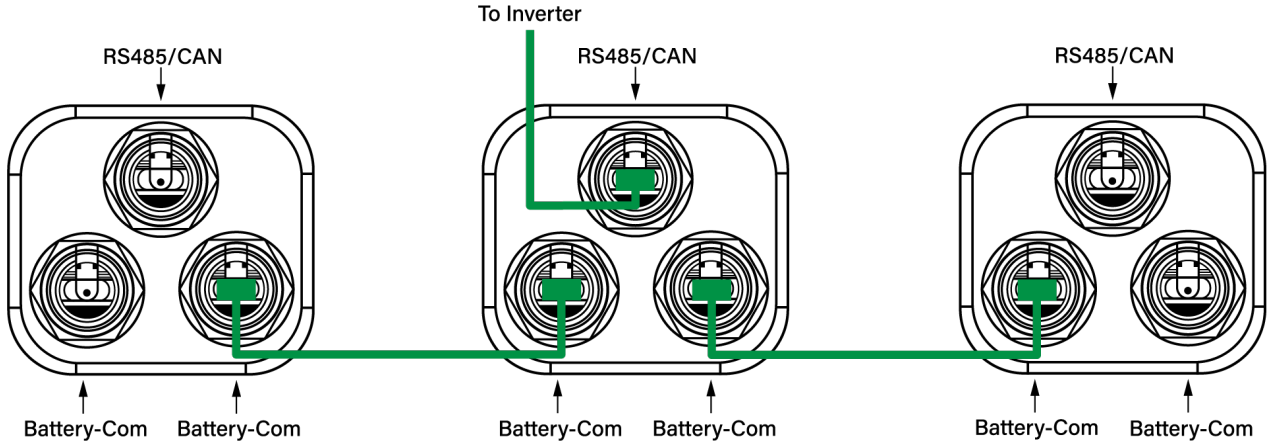

Figure 19 – Battery Communication Ports

4. The battery with DIP Switch ID 1 (referred to as the master) connects to the inverter via a properly pinned communication cable (depending on inverter) using the RS485/CAN port.

5. Install battery paralleling cables between batteries. Refer to *Section 8.2 Battery Cable Connections* for battery cable connection diagram examples.
6. Once all cable connections are completed and the system is ready to be commissioned, power on each battery breaker and BMS ON/OFF switch one at a time beginning with the master battery.

7.2 BATTERY CABLE CONNECTIONS

The following battery cable connection diagrams are examples using the internal busbars to parallel the batteries together and attach the inverter(s) to the batteries. When relying on the internal busbars, up to 3 batteries are supported in parallel when connected to a single inverter, 4 batteries in parallel when connected to 2 inverters, or up to 5 batteries in parallel when connected to 3 inverters.

Systems with more batteries than these configurations **require** the use of an external fused positive busbar and an unfused negative busbar rated at a minimum of 200A per battery. Each fuse should be a maximum of 250A. Alternatively, larger systems could rely on the 18kPV's ability to draw from different battery packs while still paralleling inverters rather than utilizing external busbars.

The maximum recommended number of paralleled 18kPV inverters is 6. If this approach is used, we recommend a ratio of 3 batteries per pack controlled by each 18kPV inverter. Separating packs is only recommended if each pack's average SOC is monitored over time and does not diverge by more than 10%. Common busbars are superior to separating battery packs but it may be difficult to source fused positive busbars rated to greater than 1800 Amps. This translates into separating packs larger than 9 batteries. *Refer to NEC code and the local AHJ for exact requirements*

NOTE: In the following diagrams, units are spaced 12 in. apart. Local regulations may require a larger minimum battery spacing. Check with the local AHJ for these requirements. If longer parallel cables than are available in the optional paralleling kit are necessary, please check with the distributor for availability.

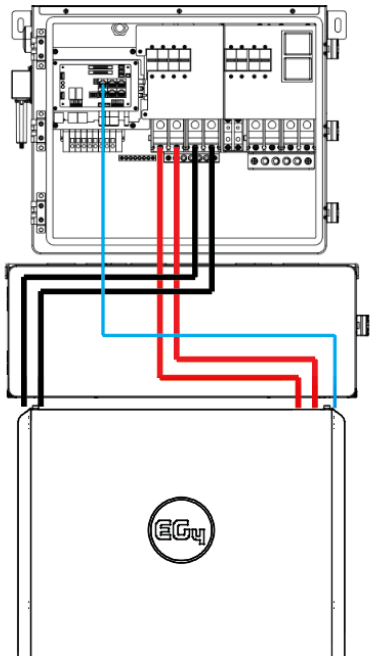

Note: To comply with the UL9540 listing for this integrated battery, conduit box, and inverter system, the batteries must be wired as shown using the supplied inverter to battery cables. *An additional paralleling kit is required for each additional paralleled battery (sold separately).*

Caution: *To minimize voltage drop in the wire, the battery cables should maintain optimum length. The 53.1 in. cables from the "parallel kit" are sufficient to daisy chain the batteries.*

Figure 20 – (1) 18kPV Inverter with (1) WallMount

7.3 ADDITIONAL CONFIGURATIONS

Note: Some configurations require additional wiring/connectors to achieve the example layouts. Inverter to inverter paralleling cables are not shown in the following diagrams.
Other configurations can be achieved by using external busbars. Please seek the guidance of an electrician or qualified person for optional system layout.

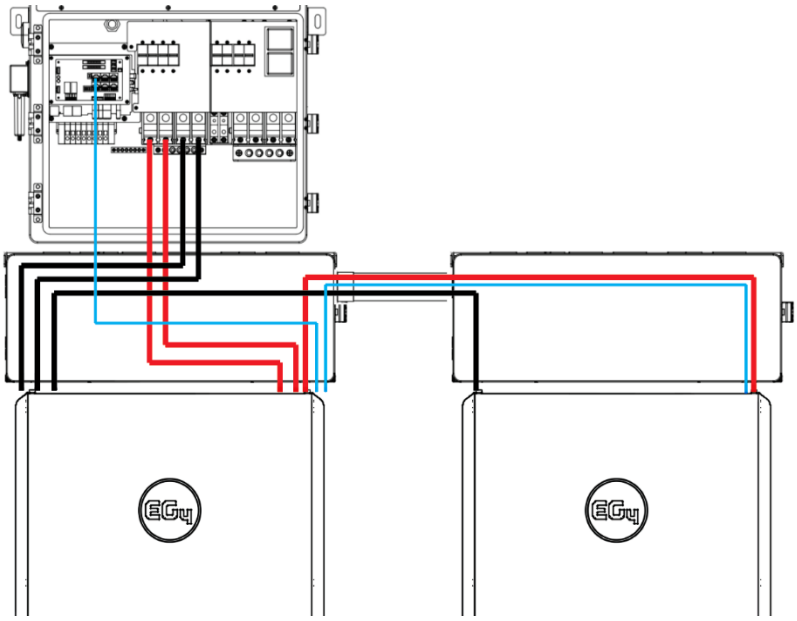

Figure 21 – (1) 18kPV Inverter with (2) WallMount

Pro Tip: One EG4-18kPV and a minimum of 2 WallMount units is the recommended configuration to maximize the system's functionality.

Color Code

- Parallel/Comm
- Positive
- Negative

Reminder!
The separation between batteries should be ≥ 12 in.

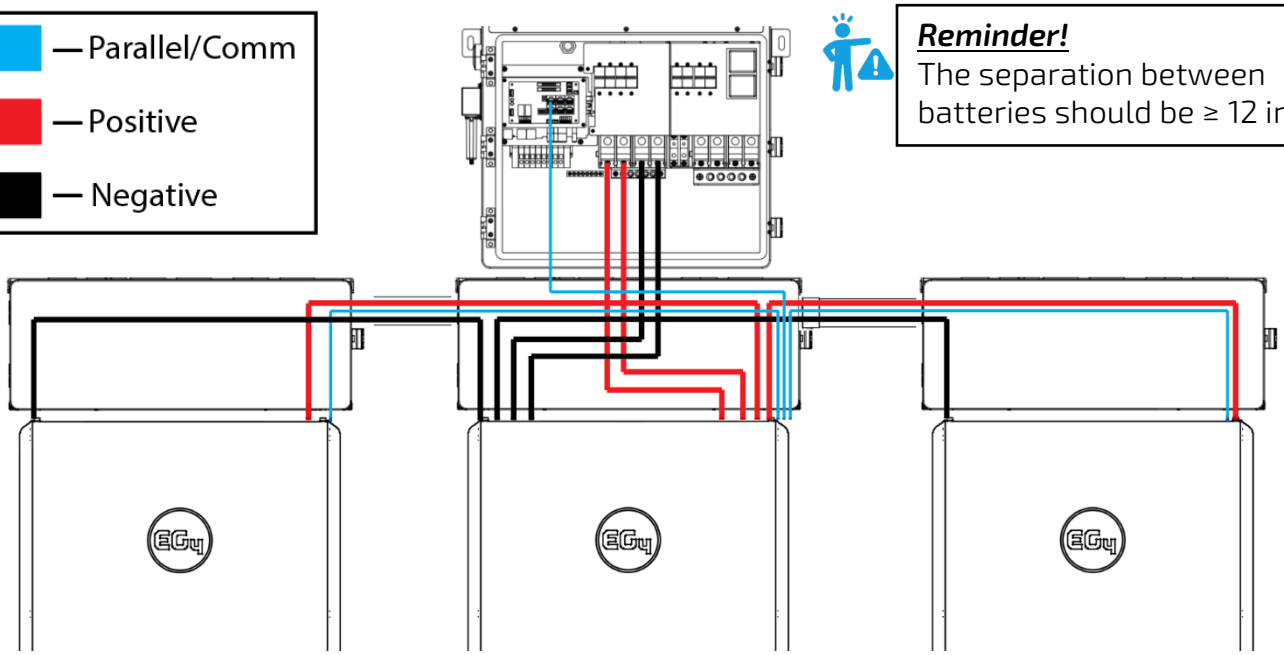

Figure 22 – (1) 18kPV Inverter with (3) WallMount

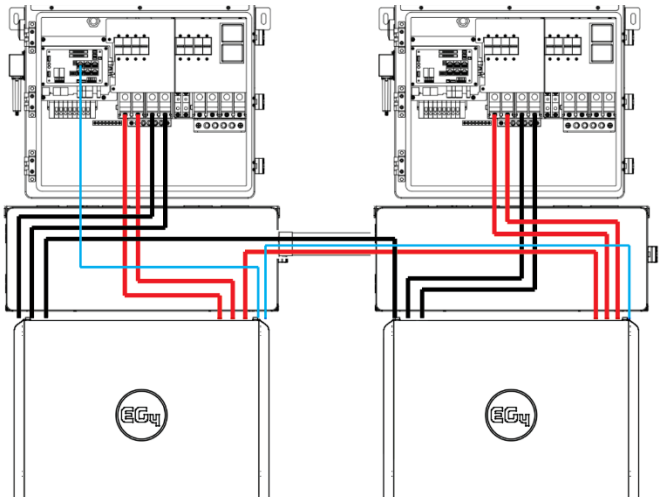

Figure 23 – (2) 18kPV Inverter with (2) WallMount

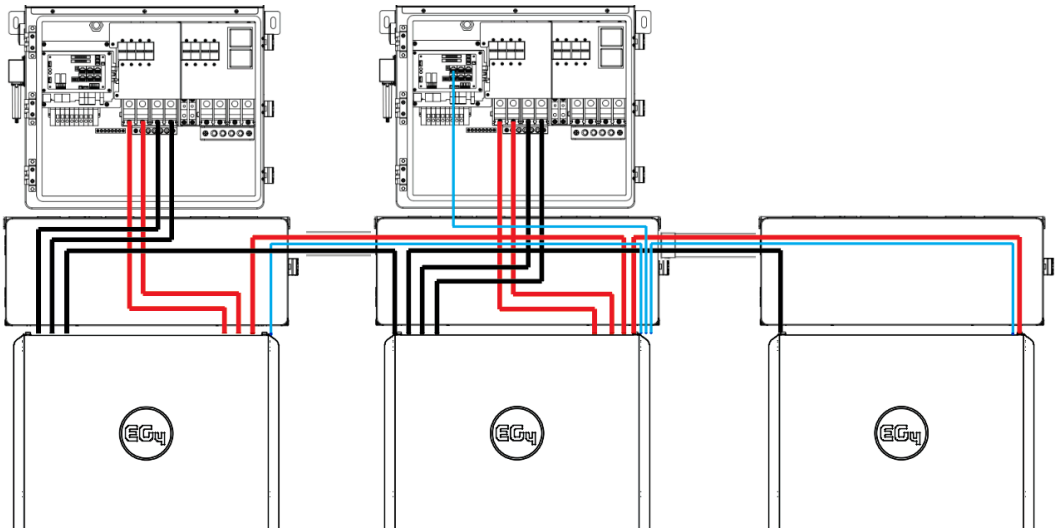

Figure 24 – (2) 18kPV Inverter with (3) WallMount

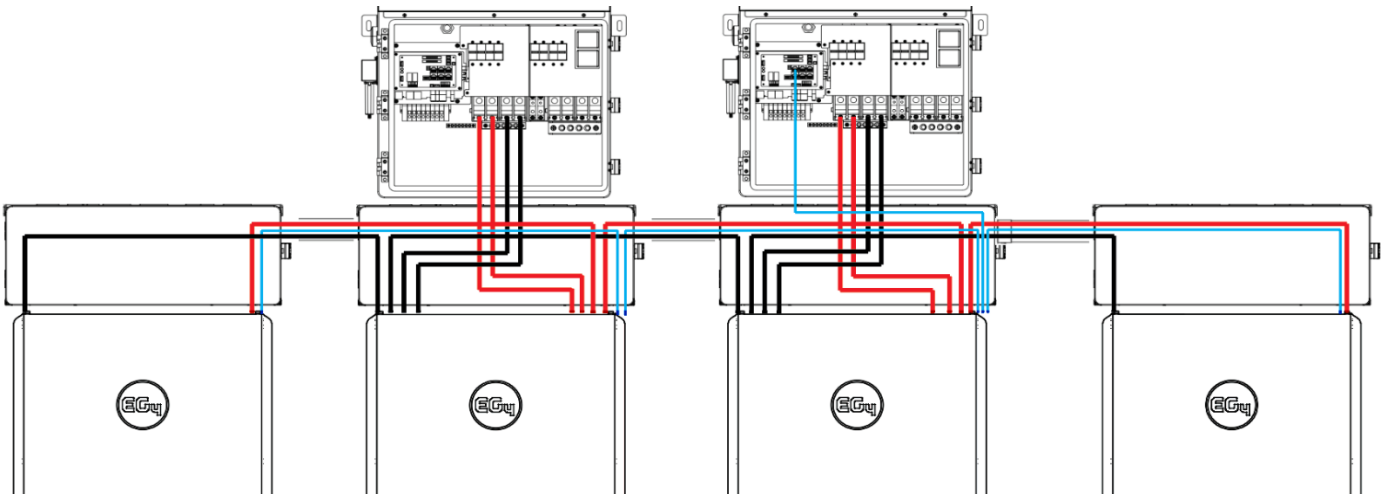

Figure 25 – (2) 18kPV Inverter with (4) WallMount

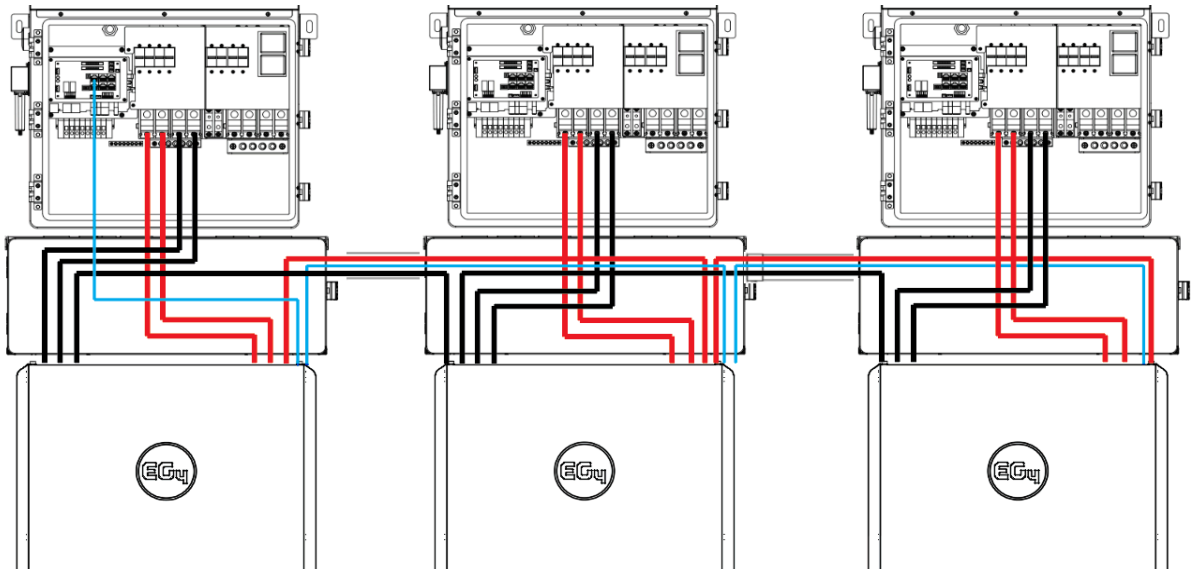

Figure 26 – (3) 18kPV Inverter with (3) WallMount

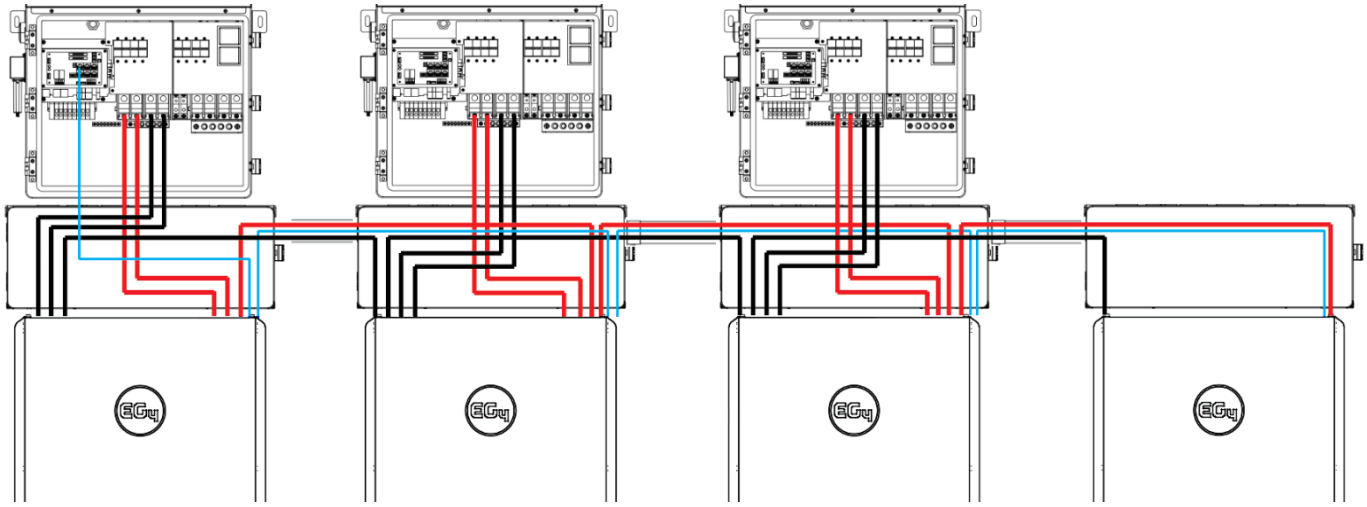

Figure 27 – (3) 18kPV Inverter with (4) WallMount

8. EMERGENCY STOP (RSD, ESS DISCONNECT)

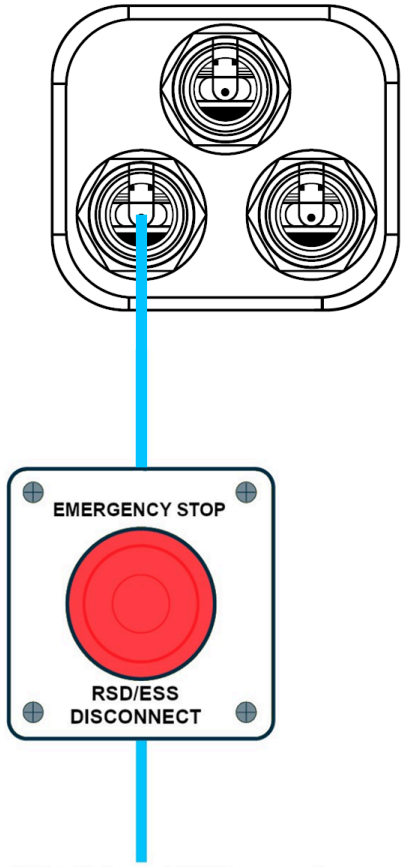

To inverter, RSD Initiator, or ESS Disconnect
(Inverter recommended if compatible with inverter's RSD system)
Normally Open (NO) or Normally Closed (NC) contacts depending on inverter

To Inverter, RSD Initiator, or ESS Disconnect
(Inverter recommended if compatible with Inverter's RSD system)
Normally Open (NO) Contacts Depending on the Inverter

Figure 28 – Emergency Stop

The optional ESS disconnect can be used to shut down all batteries and inverters (if equipped) with the push of a button.

When paralleling multiple batteries, the ESS disconnect only needs to have connections made with the master battery.

This integrated safety feature ties directly into the battery communication system via an open Battery-Com port using a standard Cat-5/6 ethernet cable.

Pins 3 & 6 are used to communicate the emergency stop information to the batteries once the stop button is pressed.

If the inverter is equipped with rapid shut down (RSD) capabilities, the emergency stop feature can be used to initiate this function. Check with the local AHJ and NEC code for compliance.

9. BATTERY COMMUNICATIONS

Each EG4 battery is designed with the end-user in mind, displaying as much information as possible in the simplest manner. EG4 Electronics includes the option of connecting the battery to PC software to monitor the module status. This allows the user to see and understand exactly what the battery is doing as well as troubleshoot if problems arise.

Note: The master battery will communicate directly with the system via the RS485/CAN port.

9.1 DIP SWITCH ID TABLE

EG4 batteries interface with an inverter by designating a "Master" battery (DIP switch ID No. 1). The available ID codes range from 1–64. The battery will connect directly to the inverter via a RS485 battery communications cable or a standard CAT 5, 5e, or 6 cable for closed loop communications with supported non-EG4 inverters using CAN bus protocol.

REMINDER

If paralleling multiple batteries, all DIP switch settings **must** be different from each other. This allows all equipment to see each battery in the bank separately. For best practice, place IDs in sequence starting with ID 1 as the master battery.

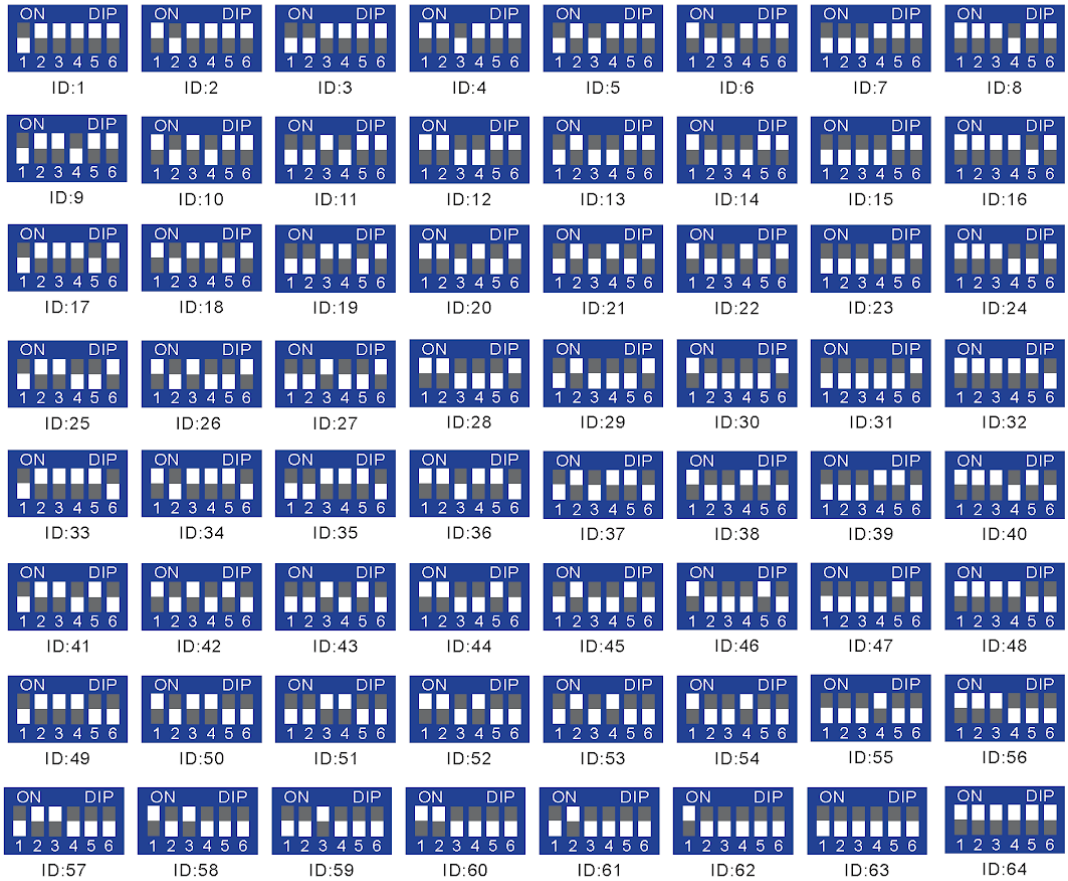

Figure 29 – Dipswitch ID Table

9.2 LCD SCREEN

Each module has a built-in HD LCD touch screen used to display important information about the cells including voltage, current, temperature, SOC, among others.

Button Description

There are 4 function buttons below the display with detailed descriptions, as shown in the table below.

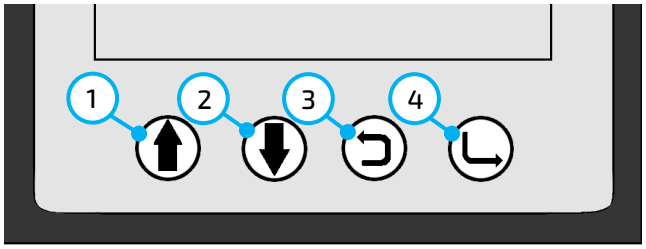

Number	Description
1	Up
2	Down
3	Return
4	Enter

Figure 30 – LCD Button Description

Waking up the LCD screen

Press any key to wake up the screen when the power is on, and the information will be shown on the display.

Number	Description
1	Battery Name
2	Status
3	Voltage
4	Current
5	System Date & Time
6	State of Charge

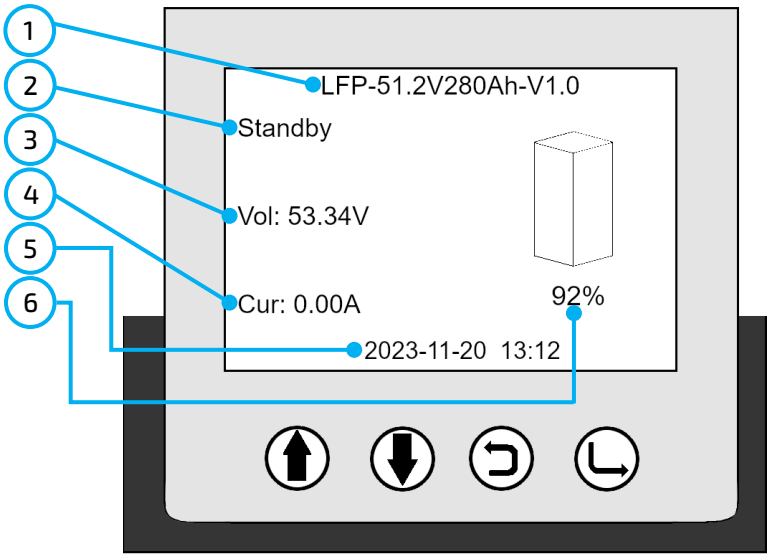

Figure 32 – LCD Screen Features

Press "*Enter*" on the Cell Voltage page to view the temperature information of the PCB and individual cells (shown in °C)

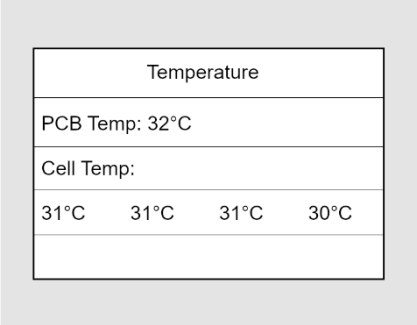

Figure 31 – Battery Temperature Information

9.3 COMMUNICATION PROTOCOL SELECTION

IMPORTANT: Only the master battery (Address 1) should be set to the inverter protocol; all other batteries must have unique addresses starting at address 2 and ascending in chronological order.

Check individual cell voltage by pressing the "*Enter*" button on the main page of the LCD screen (shown in mV). There are 2 pages. Pressing "*Up*" and "*Down*" changes the page.

Page 1

Cell Voltage(mV)		
1:3332	2:3300	3:3333
4:3334	5:3333	6:3334
7:3333	8:3334	9:3333

Page 2

Cell Voltage(mV)		
10:3332	11:3300	12:3333
13:3334	14:3333	15:3334
16:3334		

Figure 33 – Battery Cell Information

Protocol Change/Selection Procedure

1. Power off all battery DC breakers and BMS power buttons.
2. The inverter protocol can only be changed with the master battery temporarily set to address 64 (all switches ON. After the dipswitch is changed, restart the battery (with only the BMS power button) for the settings to take effect. *(See image on right.)*
3. On the master battery, press and hold the "*Return*" key for 5 seconds and release to enter the "*Protocol Setting*" menu.

ID:64

4. Select the corresponding RS485 program or CAN program, and press Enter.

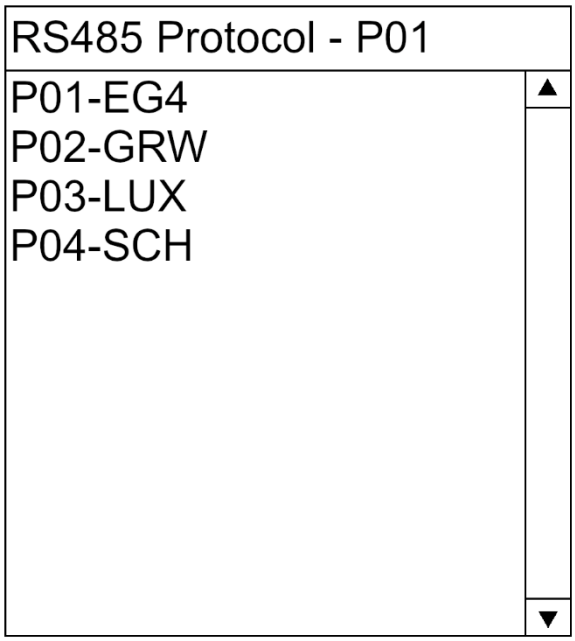

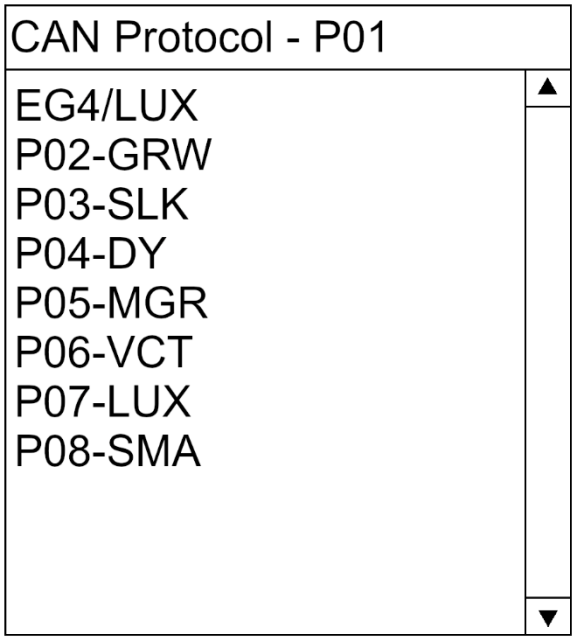

Protocol #	Manufacturer
P01-EG4	EG4
P02-GRW	Growatt
P03-LUX	Luxpower
P04-SCH	Schneider

Protocol #	Manufacturer
P01-EG4/LUX	EG4/LUX
P02-GRW	Growatt
P03-SLK	Sol-Ark
P04-DY	Deye
P05-MGR	Megarevo
P06-VCT	Victron
P07-LUX	Luxpower
P08-SMA	SMA

Figure 34 – Battery Protocol Selection

5. Press the "*Return*" key to return to the main interface.
6. Change the master DIP switch address back to address 1. *(See image on right.)*
7. Power cycle the master battery, and the BMS will correspond to the protocol selected.

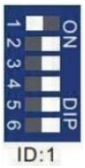

"About" Screen

When single-tapping the battery's return key, the "*About*" page will populate. Here the user can check which Inverter protocol the battery is set to, BMS version numbers, and Firmware version numbers.
See image to the right for an example.

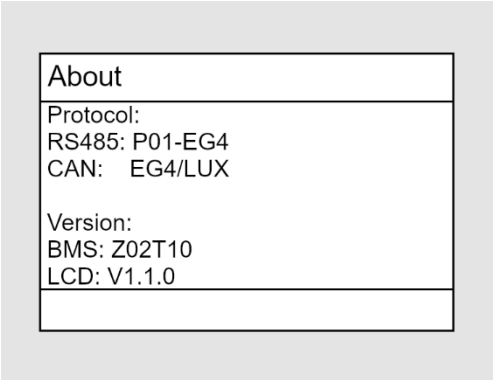

Figure 35 – "About" Display

10. OPERATION GUIDE

10.1 BMS TOOLS INSTALLATION AND INTERFACING

The PC software "*BMS Tools*" provides real-time battery analysis and diagnostics. The battery cannot communicate with BMS Tools and a closed loop inverter at the same time. The steps outlined below will walk through the initial set up of BMS Tools.

1. Using an RS-485 (RJ45 Pins 1-B, 2-A) to USB-A cable, connect to the RS-485 port of the battery and then to a USB-A port on a Windows computer.
2. Set the battery's dipswitch to ID: 64. (all dips ON)
3. Power on the battery pack.
4. Confirm the RS485 cable's COM is set correctly in the BMS Tools program. Refer to the Device Manager on the PC for more information.

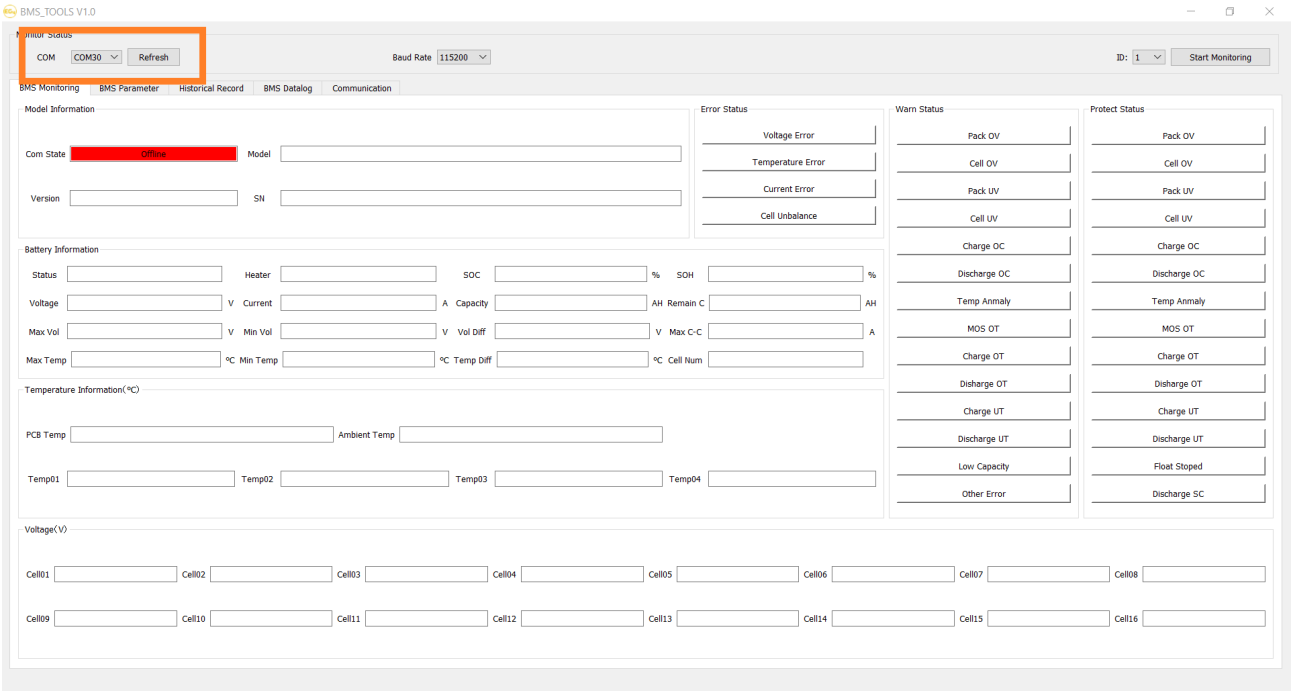

Figure 36 – BMS Tools Comm Selection

5. Change the Baud Rate to 9600.

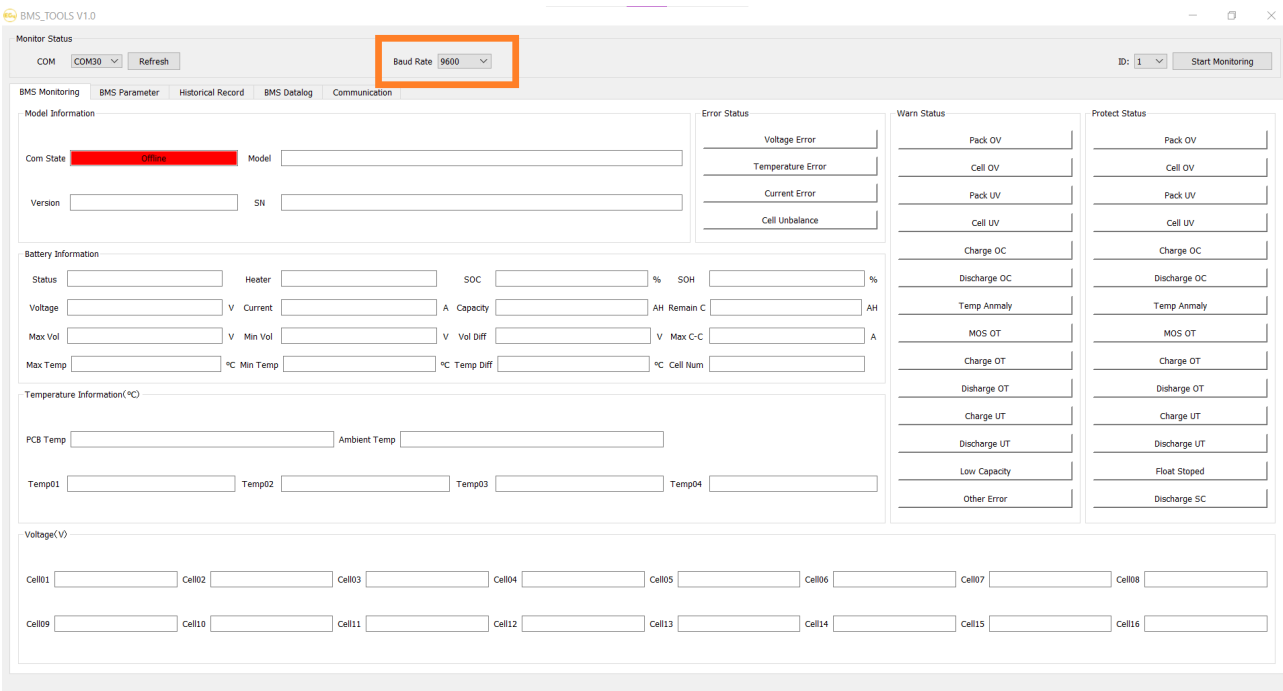

Figure 37 – BMS Tools Baud Rate

6. Change the "ID" to 64.

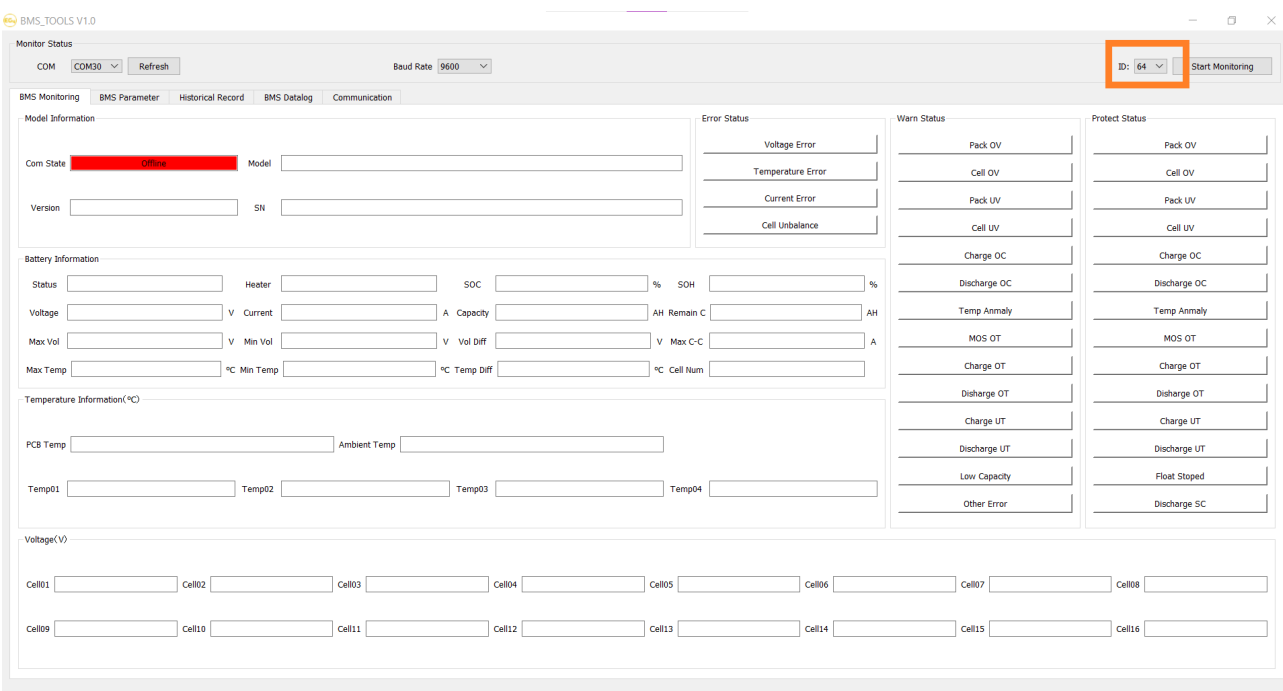

Figure 38 – BMS Tools ID Selection

7. Select, “Start Monitoring”.

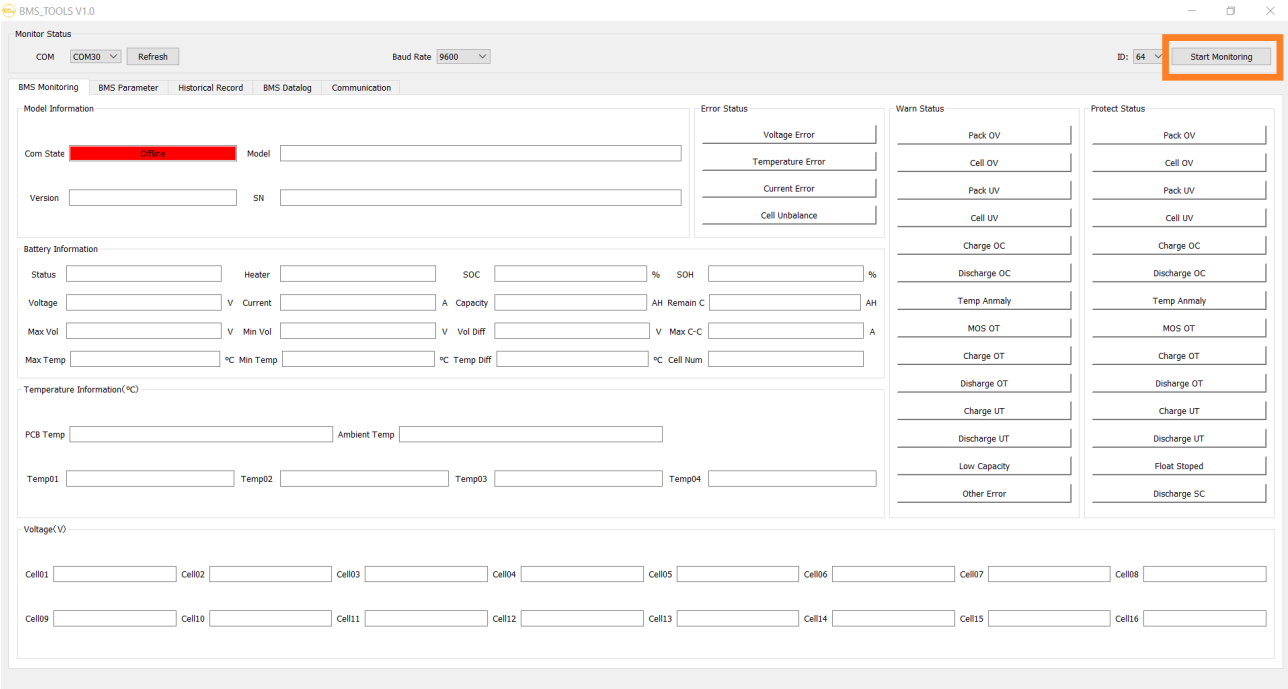

Figure 39 – BMS Tools Monitoring Initiation

8. The “Com State” will now change from “Offline” to “Connected.” The system will now monitor the battery’s values in real time.

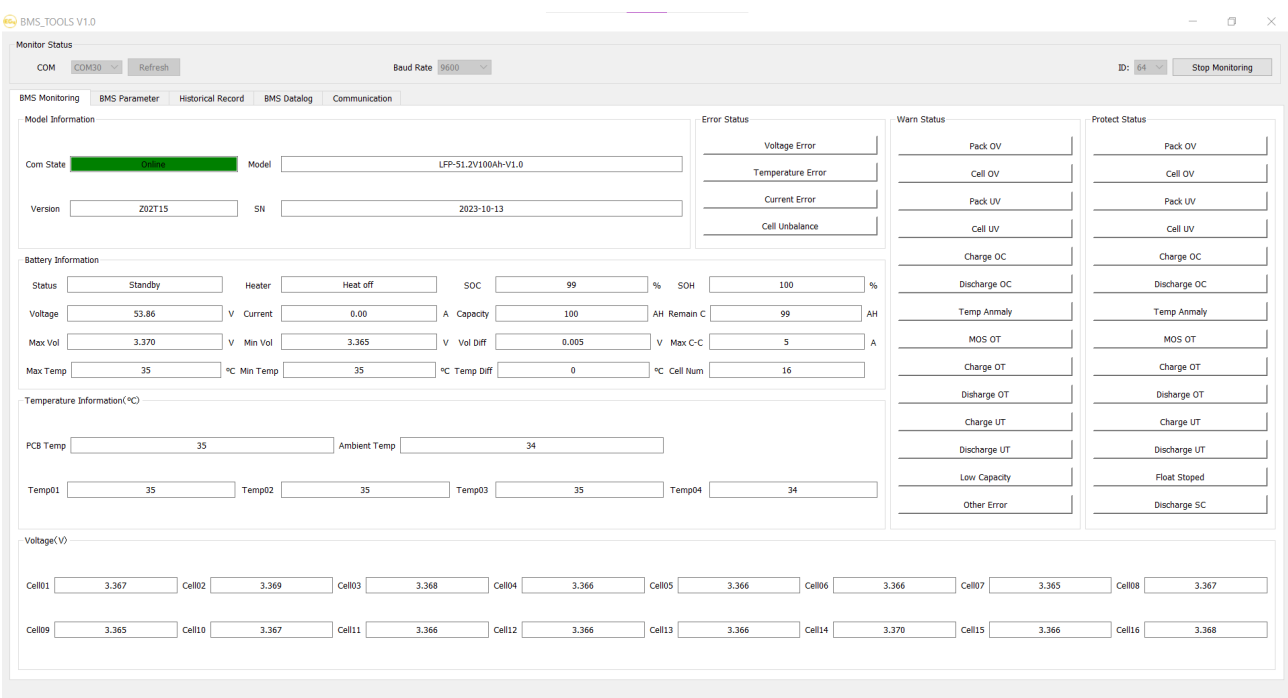

Figure 40 – BMS Tools Real-Time Monitoring

11. BATTERY CHARGING

Charge cycle

Ensure the proper settings are set on the charge controller and/or inverter being used to avoid overcharging or damaging the module. (*Refer to Section 1: Technical Specifications Table for a full list of charging/discharging parameters.)*

IMPORTANT

It is normal for LFP batteries that have their own internal BMS and that are wired in parallel to demonstrate a wide variety of SOC readings during any given charge or discharge cycle. **Variations of up to 10% are common.** This is not cause for concern or indication that the module is providing less than the maximum capacity. This is caused by even slight variations in wiring resistance to each battery, internal resistance, temperature differences, and even variations in each cell. Even a slight variation causes one battery to take more of the load or charge for a short time. Over the duration of the discharge or charge cycle, this will balance out with the lagging battery then taking the load or charge at the other end of the cycle resulting in recovering the full listed kWh capacity of the pack. The voltage differences created as batteries diverge in SOC will eventually cause them to converge at some point in the cycle.

NOTE: When installing multiple batteries or adding a battery to an existing rack, please ensure all batteries are charged to 100% before paralleling together. This step is crucial to optimize battery performance and ensure proper operation.

11.1 BATTERY PERFORMANCE CURVES

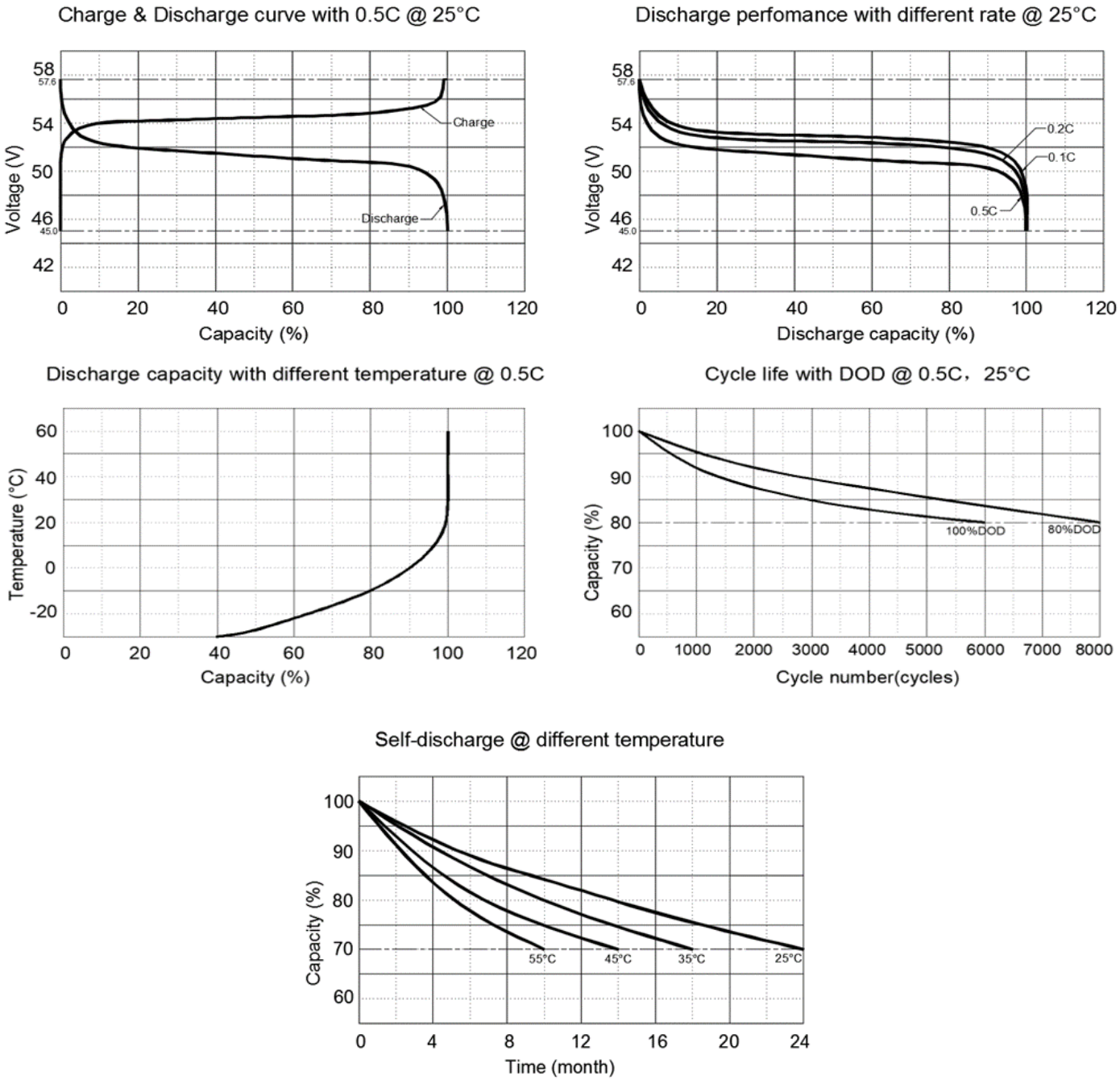

Figure 41 – Lithium Battery Performance Curves

Recommended Charge Current Settings for Paralleled Batteries on Paralleled 18kPVs

# of 18kPV	Rec. Max. Charge Current (230A per inverter)	(1) Battery Inverter Setting – Amps per Battery	(2) Batteries Inverter Setting – Amps per Battery	(3) Batteries Inverter Setting – Amps per Battery	(4) Batteries Inverter Setting – Amps per Battery
1	230A	160 – 160A	230 – 160A	230 – 77A	230 – 58A
2	460A	80 – 160A	160 – 160A	230 – 153A	230 – 115A
3	690A	53 – 159A	107 – 160A	160 – 160A	213 – 160A

Please note that if the battery firmware is updated to allow 200A maximum charge, the internal thermal sensors will throttle the charge current to what the BMS deems necessary to prevent overheating.

12. TROUBLESHOOTING, MAINTENANCE & DISPOSAL

12.1 INTRODUCTION TO THE BMS

The BMS (Battery Management System) is intended to safeguard the battery and battery cells against a variety of situations that could damage or destroy system components. This protection also aids in keeping the battery and battery cells operational for a greater number of life cycles. Each EG4 battery is specifically configured to ensure peak performance and operation with any system.

12.2 BMS PROTECTION

PCB temperature protection

The BMS will ensure that the Printed Circuit Board (PCB) does not overheat. This is the component that houses most of the “brains” of the battery. This feature will turn off the battery if it begins to overheat.

Cell balance protection

Cell balance ensures that each cell is within a specific voltage range of each other. Cell balance is crucial for ensuring that the battery is operating properly for its lifespan. This is always done automatically.

Environmental temperature protection

It may be dangerous to attempt using the battery in extreme heat or cold. Continued operation in these conditions may result in permanent damage to the battery module and its components. To prevent this, the BMS is designed to measure the temperature while charging/discharging and will shut down the battery to prevent damage.

Voltage protection

The BMS is designed to continuously monitor the voltage of each individual cell and ensure that they are not over/undercharged.

Current protection

The BMS is designed to constantly monitor the charge/discharge amperage and has built-in safeguards against exceeding specific parameters. These include built-in timers that shut off quickly in the event of short circuits, extremely high amperage and delayed shut down for amperage that is only slightly above the maximum capacity.

12.3 TROUBLESHOOTING

Alarm Description and Troubleshooting

When the ALM light on the battery control panel is on, it means that the battery has given an alarm or has been protected from potential damage. Please check the cause of the failure through the app or BMS Tools and take appropriate measures or go directly to the battery site to troubleshoot.
BMS Tools alarms are shown in the table below:

Warning and protect status definitions

STATUS	NAME	DEFINITION	ACTION
Warning/ Protect	Pack OV	Pack over-voltage	Module needs to be discharged to lower its voltage.
	Cell OV	Cell over-voltage	Check individual cell voltage in BMS Tools.
	Pack UV	Pack under-voltage	Module needs to be charged.
	Cell UV	Cell under-voltage	Check individual cell voltage in BMS Tools.
	Charge OC	Charge over-current	Incoming current needs to be reduced.
	Discharge OC	Discharge over-current	Discharge current is too high; lower loads.
	Temp Anomaly	Temperature anomaly	Check ambient and module temperature.
	MOS OT	MOSFET over-temperature	BMS temperature is too high. Power off module and cool down location.
	Charge OT	Charge over-temperature	Power off module and cool down location.
	Discharge OT	Discharge over-temperature	Power off module and cool down location.
	Charge UT	Charge under-temperature	Power off module and warm up location.
	Discharge UT	Discharge under temperature	Power off module and warm up location.
Warning	Low Capacity	Low battery capacity	Module needs to be charged.
Warning	Other Error	Error not listed	Contact the distributor
Protect	Float Stopped	Float Stopped	Contact the distributor
Protect	Discharge SC	Discharge short circuit	Discharge current is too high, turn BMS and breaker off and back on to reset. Lower loads

NOTE: The "Historical Record" tab can indicate what occurred with the module before entering a warning or protection state. It is recommended to export this data into a text (.txt) file to provide to the distributor for any additional troubleshooting assistance.

Other common faults and solutions

NOTE: *If any of the warnings or faults from both tables persist, please contact the distributor for additional troubleshooting steps.*

Fault	Analysis	Action
Inverter communication failure	Check communication port connection, and battery ID setting.	Input proper "host" battery DIP switch address, and power cycle the battery.
No DC output	Open breaker, or battery voltage is too low.	Check battery breaker or charge the battery.
Power supply unstable	Battery capacity is not at full power.	Check for proper battery cable connection.
Battery cannot be charged fully	DC output voltage is below the minimum charge voltage.	Check the charging settings on the inverter to ensure they match battery requirements.
ALM LED always on	Short circuit	Disconnect the power cable and check all cables.
The battery output voltage is unstable.	Battery management system does not operate normally.	Press the reset button to reset the battery, then reboot the system.
ALM LED flashes 20 times with SOC1 LED on.	Unbalanced voltage within a cell	Deep discharge the battery bank (<20% SOC), then charge battery bank fully.
ALM LED flashes 20 times with SOC2 LED on.	Unbalanced temperature	Contact the distributor.
ALM LED flashes 20 times with SOC 3/4 LED on.	BMS damaged	Contact the distributor.
Different SOC value of batteries in parallel operation.	No issue	Deep discharge the battery bank (<20% SOC), then charge battery bank fully.
Low voltage protection with no LED on	BMS is in low voltage protection, and is in sleep mode	Contact the distributor.
Deeply discharged with "*RUN*" LED on	The battery voltage is too low to start BMS.	Contact the distributor.

12.4 BATTERY END OF LIFE

The EG4 48V battery is designed to last for *more than 15 years* when used correctly. We have worked tirelessly to ensure that our batteries will maintain a charge after thousands of cycles. However, when it does come time to retire the battery, there are a few things to consider.
Lithium iron phosphate batteries are considered a hazardous material and should not be disposed of by simply placing them in the trash. There are several websites and organizations that will accept this battery to recycle at little to no cost to the user. At EG4, we understand that we are working with customers across the United States and the world. Our recommendation is to go online and search the term "Lithium Battery Disposal Near Me." There will likely be an assortment of organizations that can safely dispose of LFP batteries.
We recommend calling ahead of time to ensure that the location is still open and accepting material.
If users are unable to locate a disposal location safely, EG4 is here to help. Before dumping the battery or disposing of it incorrectly, please contact our customer service team for assistance.

13. EG4 10 YEAR LIMITED WARRANTY

The warranty must be registered within the first year of purchase to remain valid. If users choose not to register the product, the warranty may be invalidated. This limited warranty is to the original purchaser of the product and is not transferable to any other person or entity. All BMS and cell exchanges are covered throughout the warranty period. If a full replacement warranty is needed the warranty is prorated 1/9th per year after the first year at the current retail pricing.

13.1 WARRANTY EXCLUSIONS

Under this limited warranty, EG4® Electronics has no obligation to the product if it is subject to the following conditions, including but not limited to:

- Damages incurred during installation or removal
- Damages caused during mishandling of product
- Inappropriate environmental exposure
- Damages caused by improper maintenance
- Unauthorized tampering, altering, and/or disassembly of product
- Using the product for purposes other than those intended by the manufacturer
- Lightning, Fire, Flood, or Acts of God
- Any product whose serial number has been altered, defaced, or removed

The equipment sold by EG4 Electronics is designed to be installed only by licensed, trained, and insured solar electrical installation professionals. We strongly advise customers to seek the assistance of such a professional to implement these products, and we make no warranty of the purchaser's safety, success of equipment implementation, or compliance with local codes and regulations.

EG4 Electronics disclaims all additional warranties, expressed or implied, including but not limited to, any implied warranty with respect to the accuracy or completeness of the information they disseminate and /or fitness of the materials sold for a particular purpose. No warranty may be created or extended by sales or promotional materials on these items. Each party hereby irrevocably waives its rights to trial by jury in any action or proceeding arising out of this agreement or the transactions relating to its subject matter. All installation advice provided by EG4 before, during, or after purchase of solar equipment is purely for the purpose of general concept education and must not replace the expertise of a licensed and trained solar specialist. The customer agrees to full indemnification for EG4 henceforth from any legal recourse relating to and arising out of losses, direct or consequential, from the installation of the products purchased by the customer more than the value of the equipment purchase price.

14. STORAGE

Please follow these instructions for the safe storage of the unit to maintain the longevity of the battery, if choosing not to install the product immediately after purchasing or unpacking the box.

There are a few steps that can be taken to ensure that batteries are stored safely and in a state that will ensure they are not damaged during storage. The steps are detailed below.

Battery State

The state of the battery when placed into storage will affect how long it can be stored as well as the battery's condition when it is brought out of storage. EG4 recommends that each battery is brought to a 100% SOC (state of charge) before placing it in storage. Lithium batteries will lose a certain percentage of their total charge while in storage, depending on how long they are stored and the conditions they are stored in. We recommend recharging the batteries after 8–9 months in prolonged storage.

Environmental Factors

The environment the battery is stored in can greatly affect the health of the battery. **For best results**, the temperature should range between 33°F and 90°F (0.6°C and 32°C). Mount the battery in a location where it is not exposed to direct rain, standing water and ***ensure the battery is mounted on non-combustible material.*** Keep the battery ***away from direct sunlight***. Store the batteries away from combustible materials.

NOTES

EG4