SUMMERSET

20" Stainless Steel Double Trash/Recycling 2-Bin Pullout Drawer

Model	SSTD2-20
Cutout Dimensions*	W18 1/4" x H24 3/8" x D24 3/8"
Overall Dimensions**	W20" x H27" x D24 1/8"

- **#304 Stainless Steel Construction**
- **1/2" Return on Flange**
- **Holds 2 Trash Bins for Trash and Recycling**
- **Double Lined for Extra Insulation**
- **Trash & Recycling Bin Included**

*** Manufacturer Suggested Cutout Dimensions**

**** Manufacturer Approximate Overall Dimensions**

NOTES

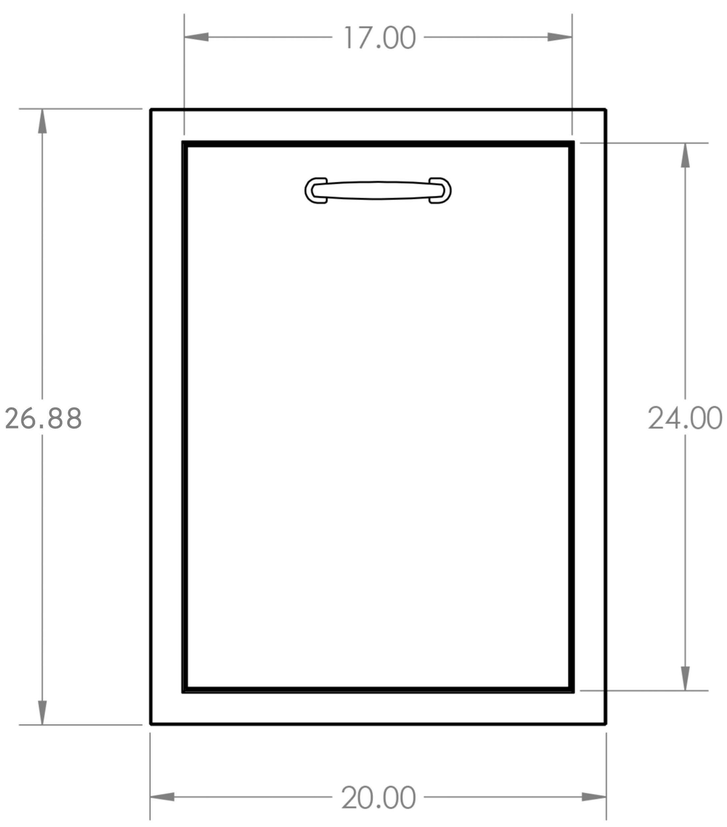

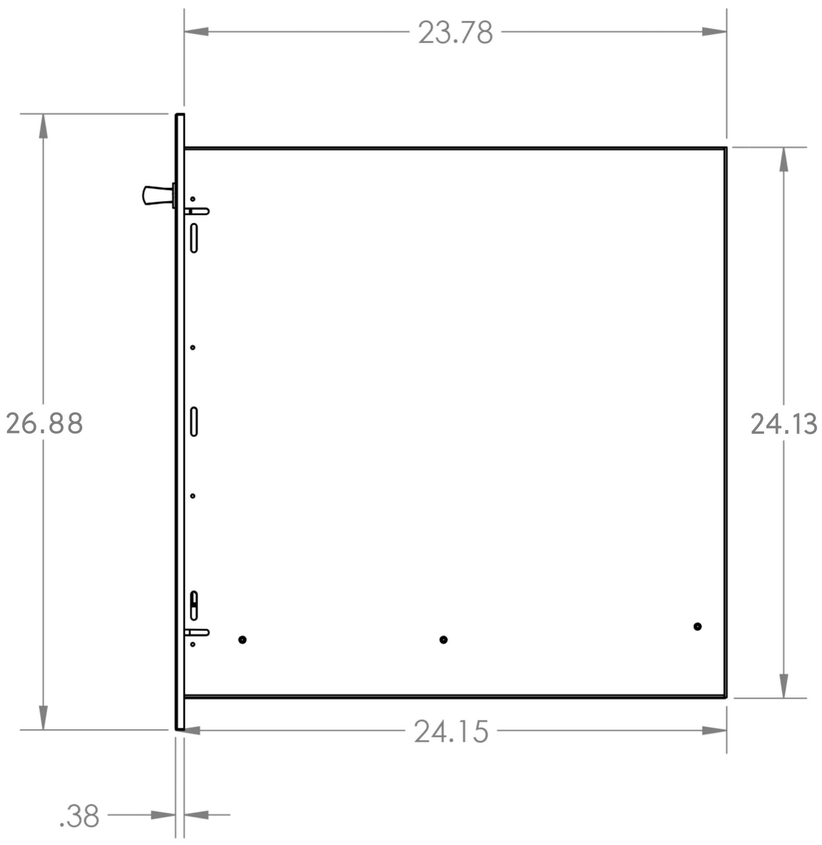

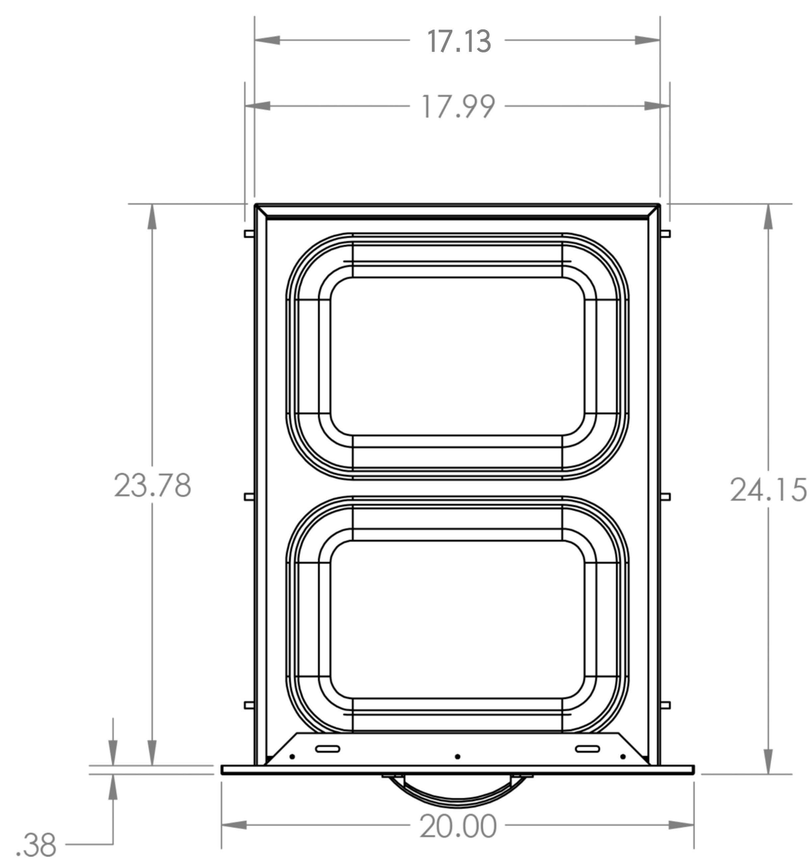

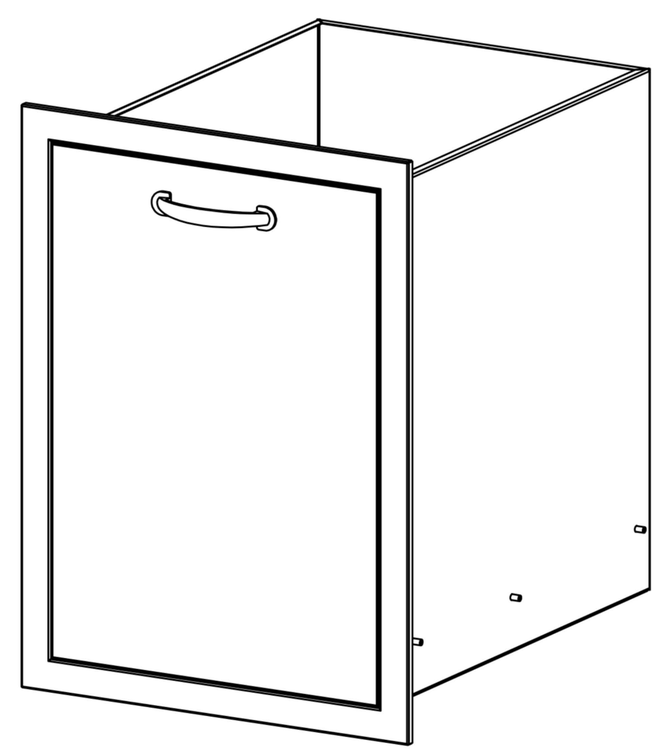

Suggested Cutout Dimensions*

(W) 18 1/4" x (H) 24 3/8" x (D) 24 3/8"

Island Front View

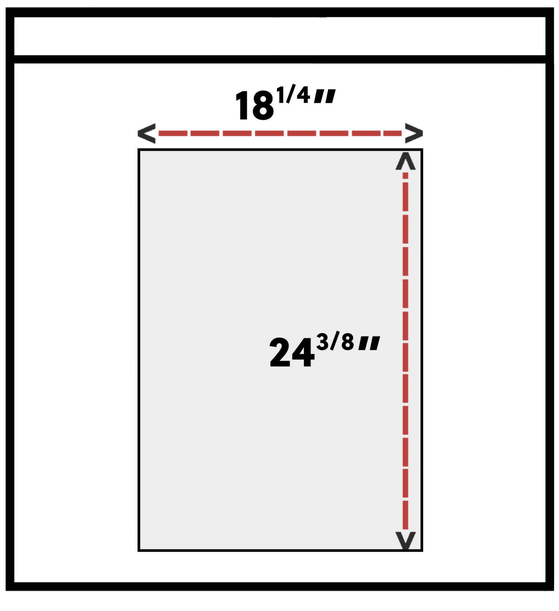
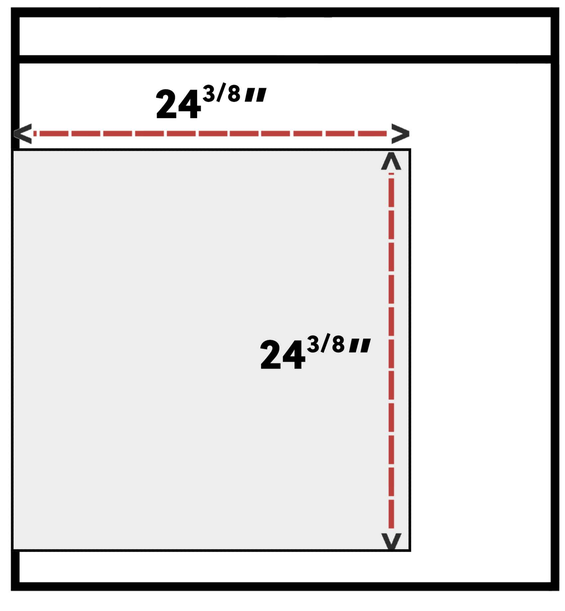
Island Side View