SUMMERSET
PROFESSIONAL GRILLS

Madera 30″ Integrated Stainless Steel Dry Storage 2-Drawer & Access Door Combo

Model	**SSMDP-30AC**
Cutout Dimensions*	**W28” x H17 1/2” x D22 3/4”**
Overall Dimensions**	**W30” x H20” x D23 5/8”**

- **#304 North American Stainless Steel Construction**
- **Sustainably Sourced Teak or Ipe Option**
- **Wood Specifications Available for Customization**
- **Removable Bracket for Wood Extraction and Maintenance**
- **Easy Glide Rail System w/ Soft Closure Feature**
- **Door Storage Shelf**
- **Magnetic Latch and Weather Resistant Gasket for Trash Drawer Seal**
- **Adjustable Height Interior Shelves**

*** Manufacturer Suggested Cutout Dimensions**

**** Manufacturer Approximate Overall Dimensions**

NOTES

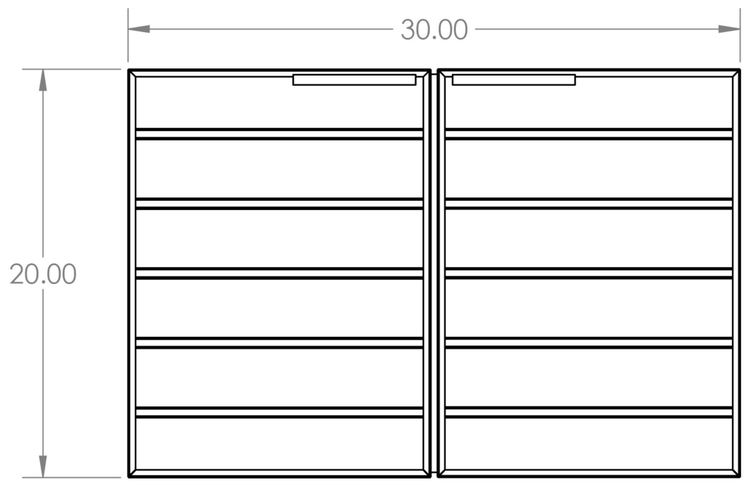

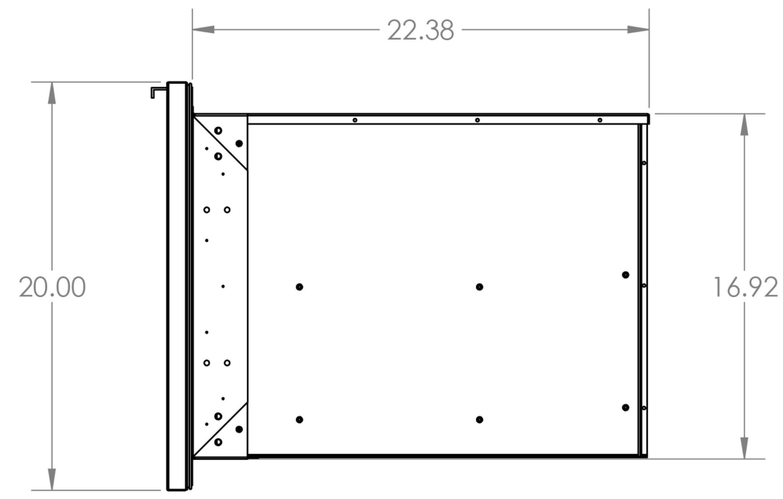

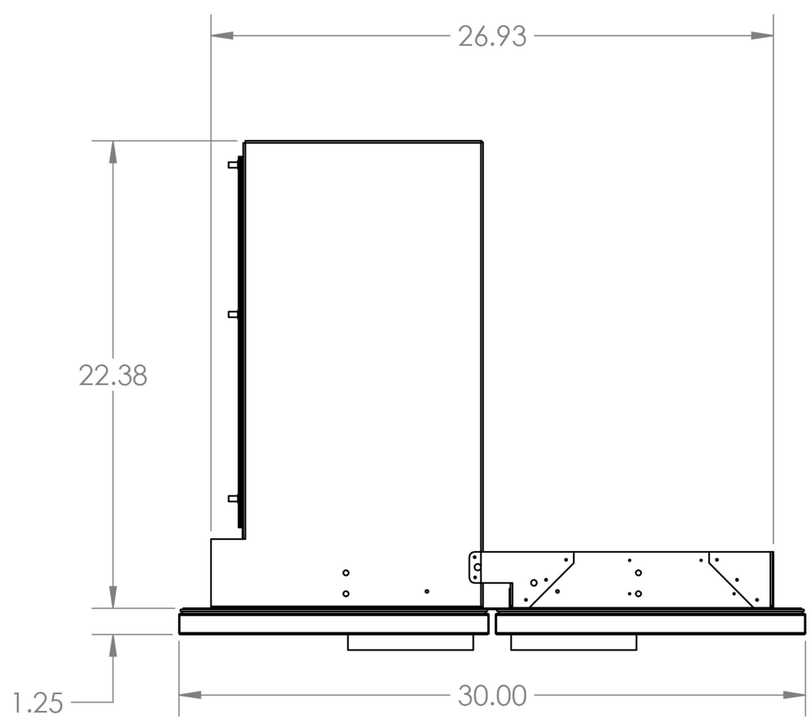

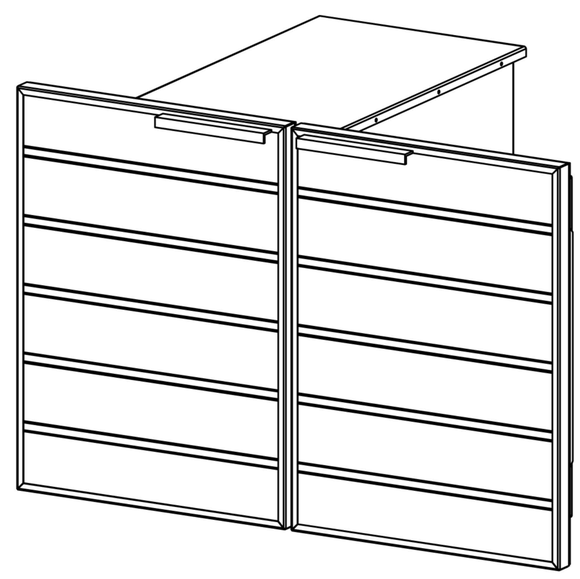

Suggested Cutout Dimensions*

(W) 28” x (H) 17 1/2” x (D) 22 3/4”

Island Front View

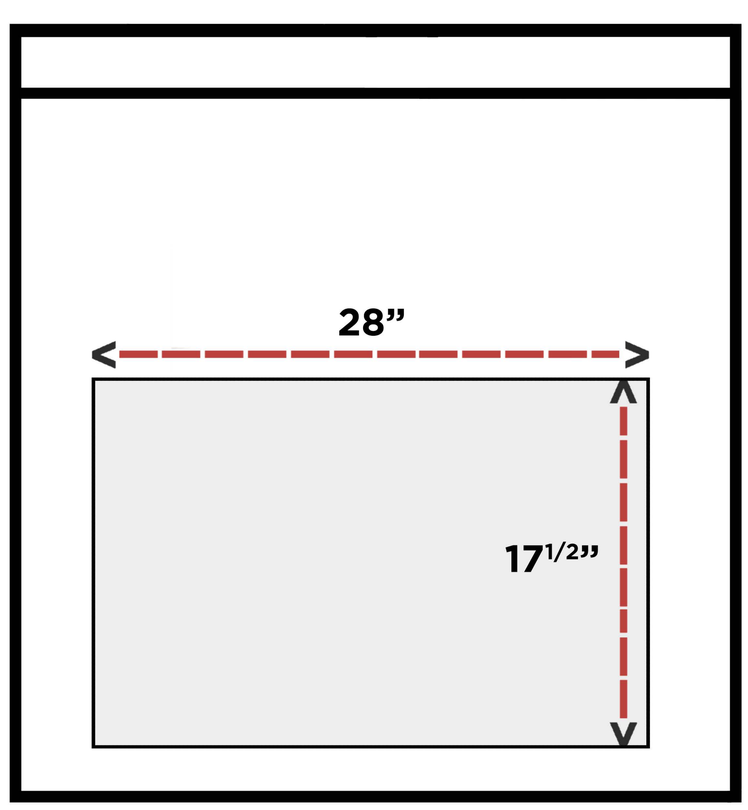
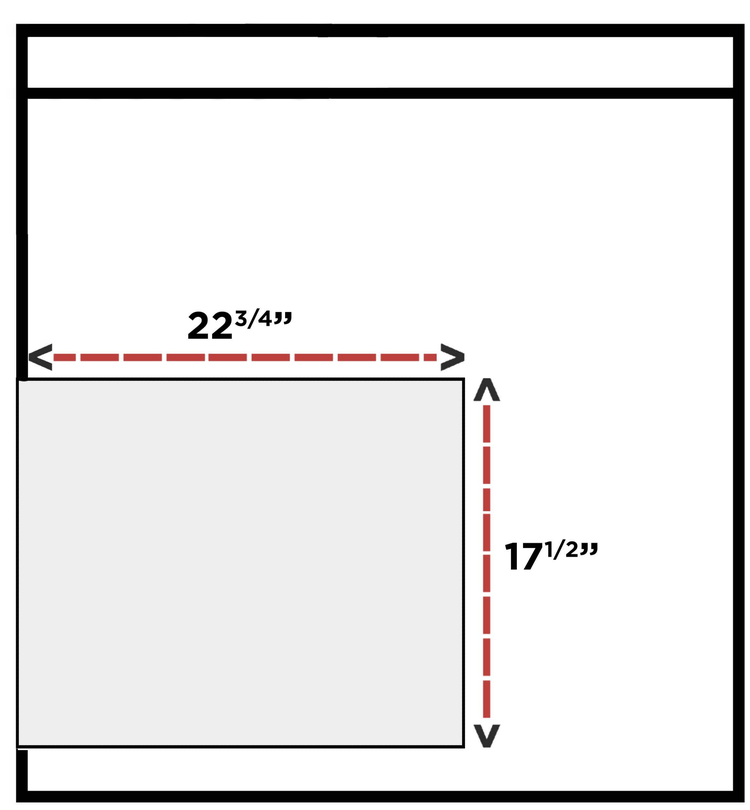
Island Side View