PRODUCT SPECIFICATION

35316
ZERO KNURL BASIN SET, TALL

FEATURES
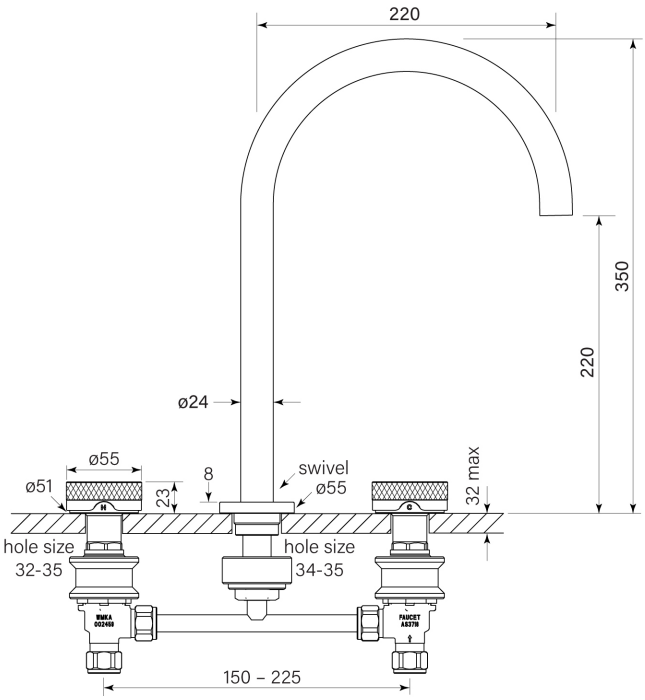
- WELS 5* 6lpm
- Quarter turn ceramic cartridges
- Fine knurled texture on handles
- Swivel spout with 220mm reach