PRODUCT SPECIFICATION

30653

PEGASI M WALL SWIVEL BATH MIXER SET

FEATURES
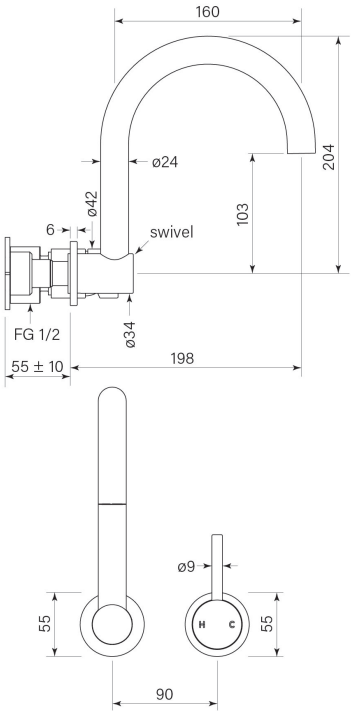
- Free flow
- Reach 200 mm
- 2 stage flow step valve
- Includes Logikit™ body
- Recessed flow straightener
- To upgrade to the No Pin Handle, order either 34380 smooth, or 34381 knurled handle along with this mixer and we will supply assembled