PRODUCT SPECIFICATION

30652
PEGASI M WALL SWIVEL BASIN MIXER SET

FEATURES

- WELS 5* 6 lpm
- Reach 200 mm
- 2 stage flow step valve
- Includes Logikit™ body
- Recessed aerator
- WELS registration number T41009
- To upgrade to the No Pin Handle, order either 34380 smooth, or 34381 knurled handle along with this mixer and we will supply assembled
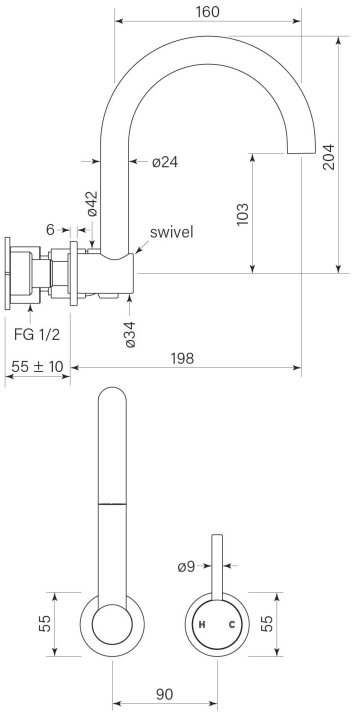
AUSTRALIAN MADE