PRODUCT SPECIFICATION

30566

CASCADE BASIN MIXER CURVE 160

FEATURES
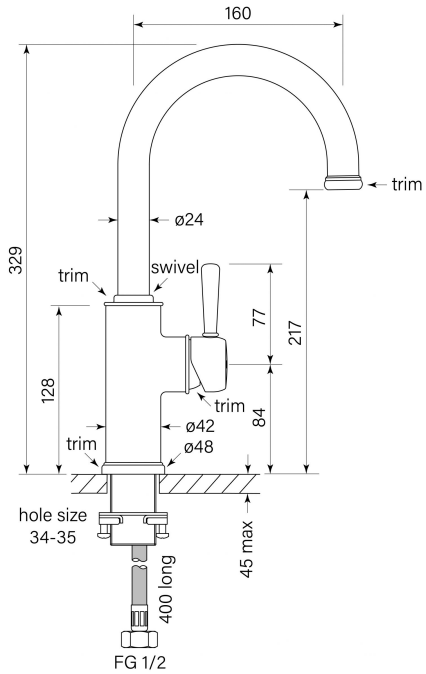
- WELS 5* 6 lpm
- Swivel spout reach 160 mm
- 2 stage Flowstep™ valve
- Tap hole size 34-35 mm
- WELS registration number T41032