SLNM-118-AA (Narrow Mast Semi-Electric Stacker with Adjustable Forks and Adjustable Legs)

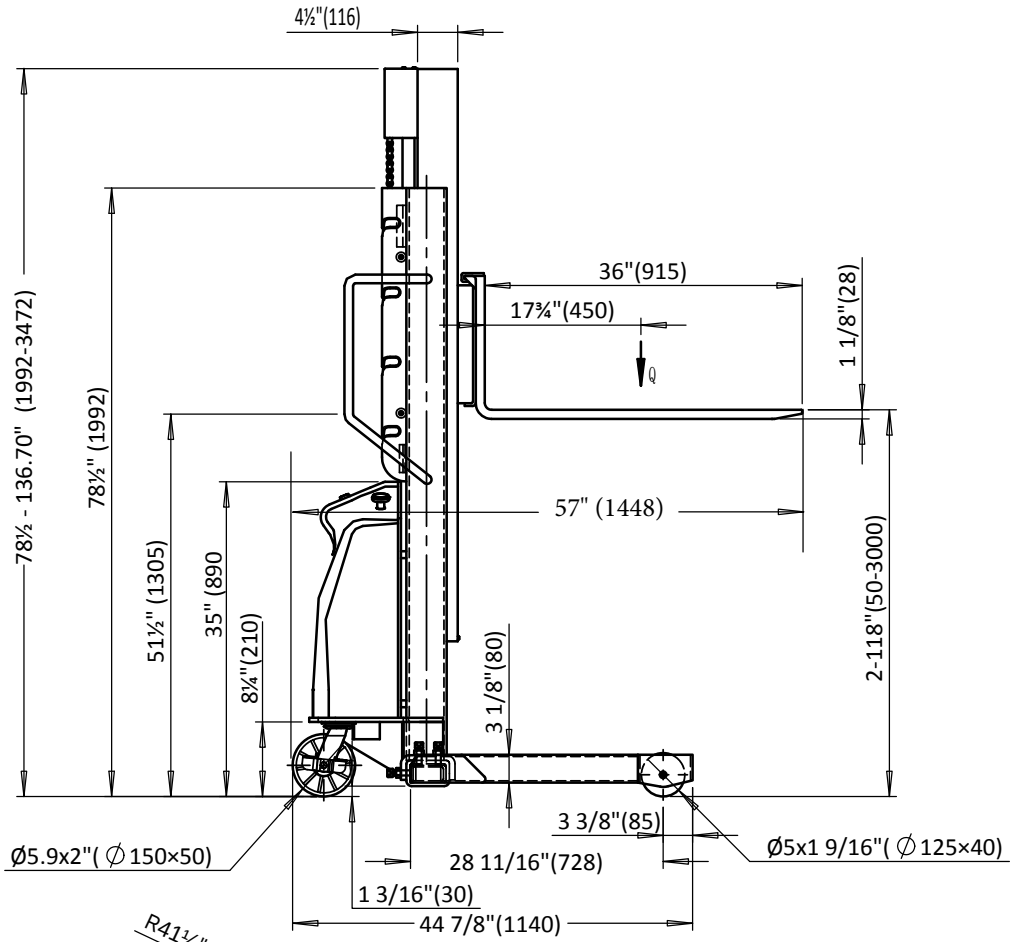

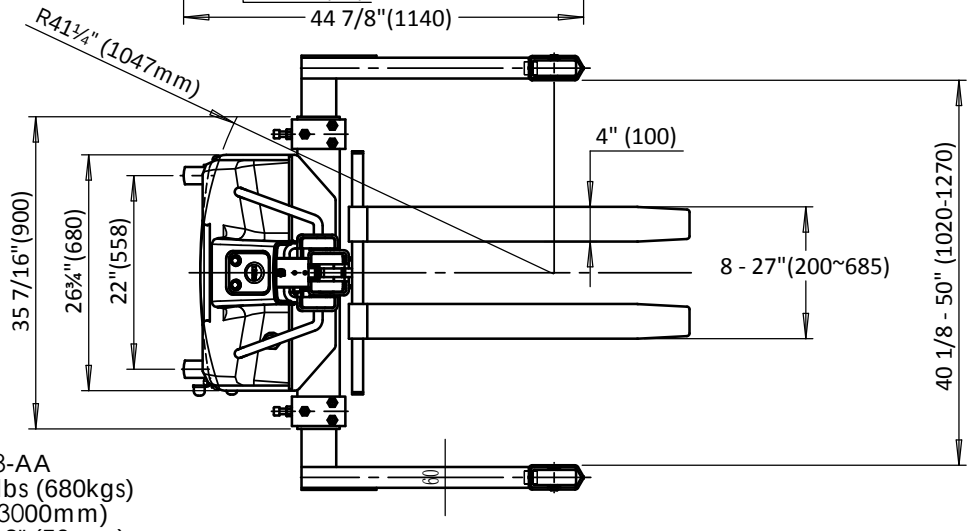

Specifactions
Model: SLNM-118-AA
Capacity: 1,500 lbs (680kgs)
Lift Height: 118" (3000mm)
Lowered Height: 2" (50mm)
Adjustable Legs & Adjustable Forks
Overall Mast Height: 78½" (1742mm)
Lift Motor: DC12V/1.3KW
Battery: 12V/140Ah
Battery Charger: 12V/6amp

Raise Time Loaded: 5.9"/s
Raise Time Unloaded: 2.95"/s
Down Time Loaded: 4"/s
Down Time Unloaded: 3.15"/s

VESTIL MANUFACTURING CORP.	
Model: SLNM-118-AA	
Description: Narrow Mast Semi-Electric Stacker with Adjustable Forks and Adjustable Legs	
DRAWN BY: T.M	DATE: 08/21/20