ROUGH TERRAIN STACKER - RT-S-62-AF

*** ANY ADDITIONS, DELETIONS, OR OMISSIONS MUST BE CORRECTED ON THIS DRAWING AS THIS DRAWING WILL BE CONSIDERED ALL INCLUSIVE ***
ALL GRAPHICS PROVIDED ARE FOR REFERENCE ONLY. IF CERTAIN DIMENSIONS ARE CRITICAL PLEASE VERIFY THOSE DIMENSIONS WITH YOUR SALESPERSON

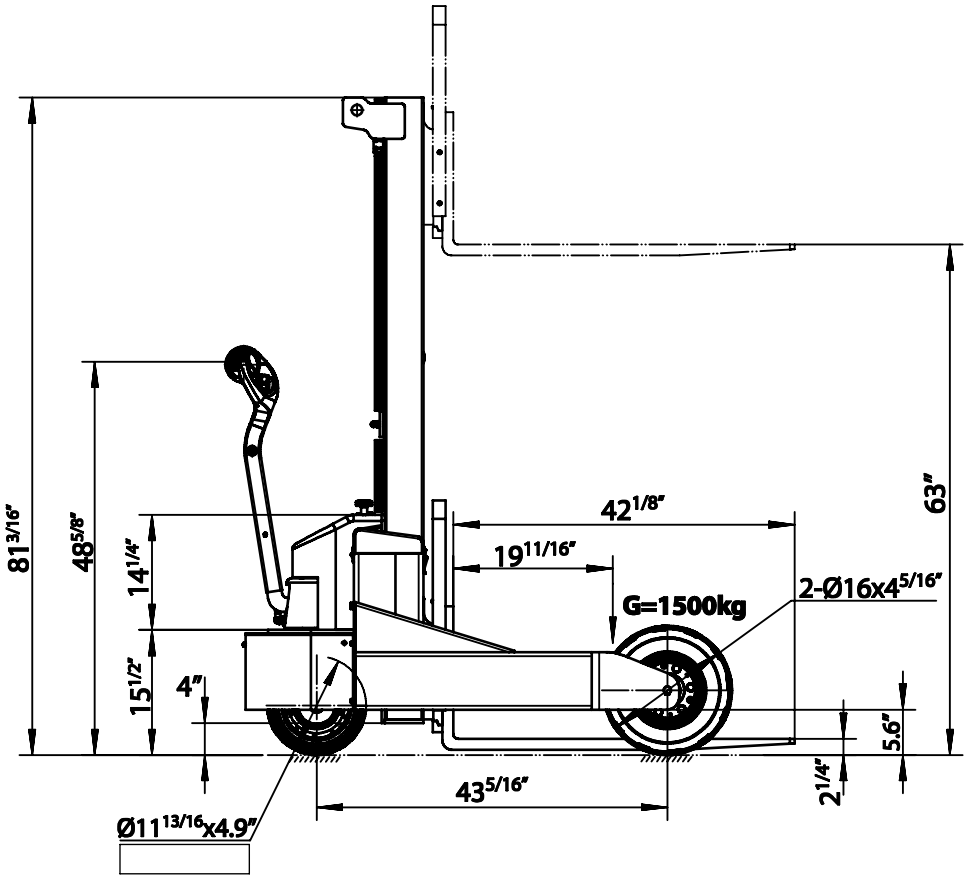

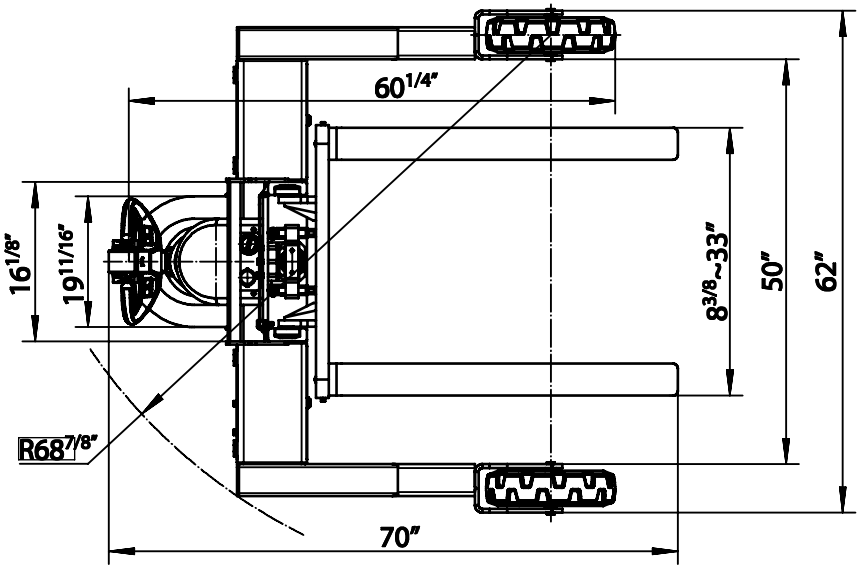

DIMENSION TOLERANCE ± 1/2"

FEATURES

MODEL NO.: RT-S-62-AF
CAPACITY: 3,000 LBS
LIFT HEIGHT: 63"
LOWERED HEIGHT: 2 1/4"
DRIVE MOTOR AC16/1.5KW
LIFT MOTOR: 24V/2.0KW
BATTERY: 2x12V/105Ah
BATTERY CHARGER: 24V/12amp
TRAVEL SPEED W/O LOAD: 2.1m/h
TRAVEL SPED W/ LOAD: 1.5m/h
GRADEABLITY: 0°
TOUGH BAKED IN POWDER COAT BLACK & YELLOW FINISH

APPROVAL

I, THE UNDERSIGNED, AGREE THAT THE PRODUCT AS REPRESENTED SATISFIES DESIGN AND DIMENSION REQUIREMENTS. I ALSO ACKNOWLEDGE MY DUTY TO CONFIRM PRODUCT AND INSTALLATION COMPLIANCE WITH ALL APPLICABLE FEDERAL, STATE AND LOCAL REGULATIONS AND STANDARDS.

UNITS REQUIRING APPROVAL DRAWINGS OR MODIFIED ARE NON-RETURNABLE

[ ] As drawn [ ] As marked

Signed:_____ Date:_____

Printed Name:_____

LEAD TIME WILL START UPON RECEIPT OF SIGNED APPROVAL DRAWING

FOR INTERNAL USE ONLY PROJECT SIGN OFF	
SALES	
ENG.	
FAB.	
POWER	

DISTRIBUTOR'S NAME: VESTIL MANUFACTURING		P.O.# X
		W.O.# X
DRAWN BY: TM	DATE: 6/2/2020	SALES: X
REFERENCE: X	SCALE: 1:2	FILE NAME: RT-S-62-AF
QUOTED LEAD TIME: X	QUOTE # X	