DRUM-LRT-DC (Electric Drum Lifter and Manual Rotator)

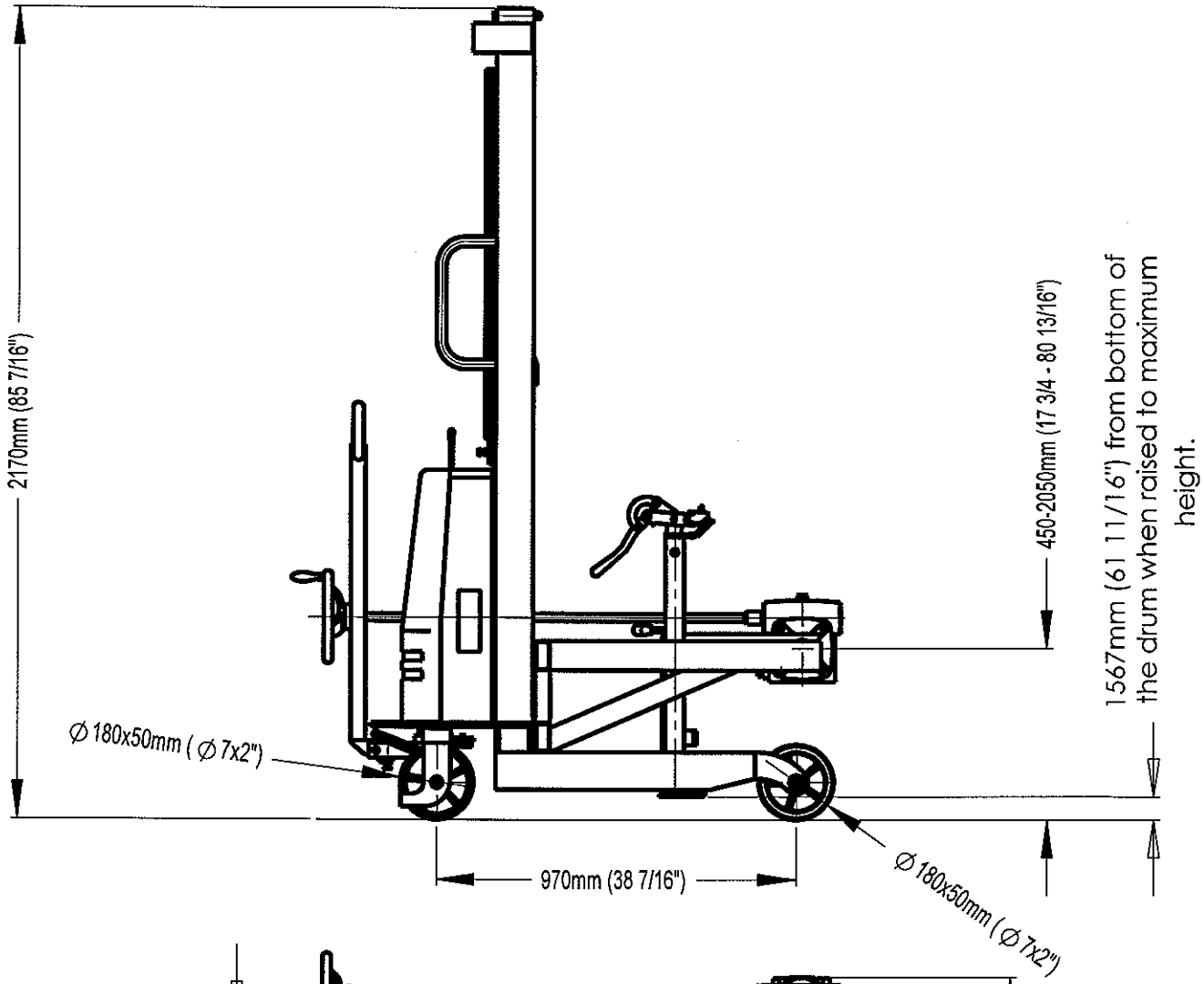

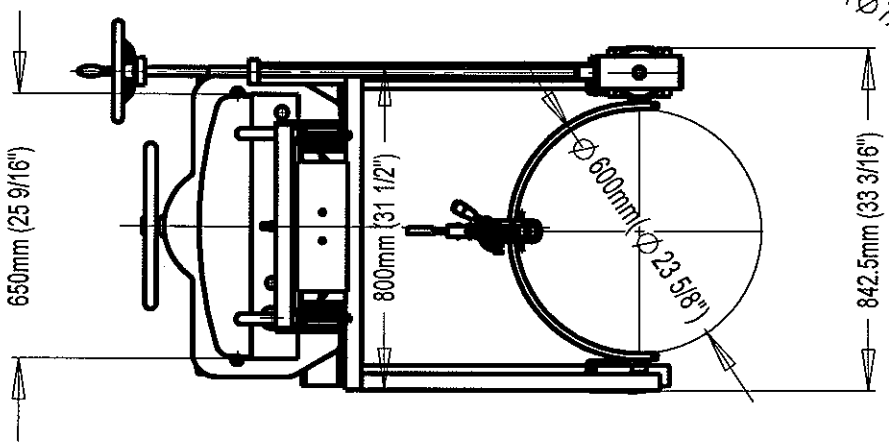

Specifications
Model # DRUM-LRT-DC
Capacity: 550 lbs.
Lift height: 63"
Mast: Single
Safety Shield: Yes
Overall mast height: 85 7/16"
Steering wheel: Ø7 x2"
Front wheel: Ø7x2"
Lift Motor: DC12V/1500W
Battery Charger: VST112-15
Battery: 12V/120Ah
Gear Ratio: 1:42
Lift Time with weight: 5.9"/s
Down Time with weight: 2.95"/s
Lift Time without weight: 3.9"/s
Down Time without weight: 3.2/s

Steel & Fiber Drums ONLY

VESTIL MANUFACTURING CORP.	
Model:	DRUM-LRT-DC
Description:	DC DRUM LIFTER/ROTATOR (Electric Lift/Manual Rotation)