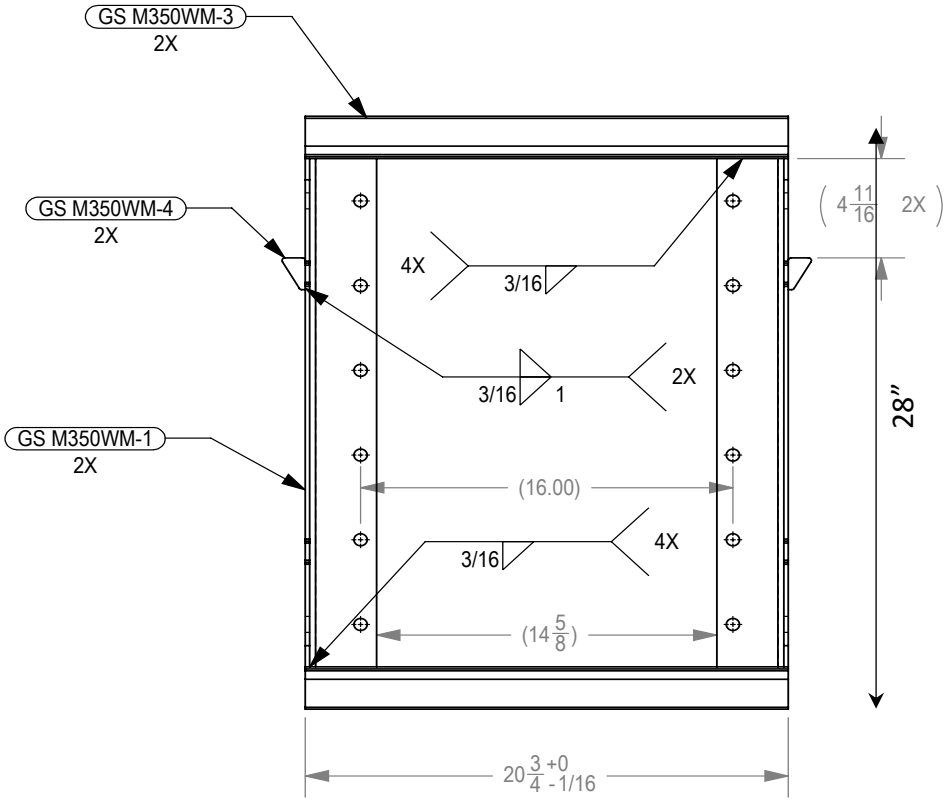

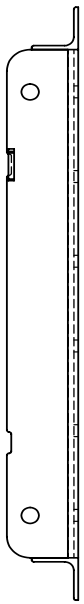

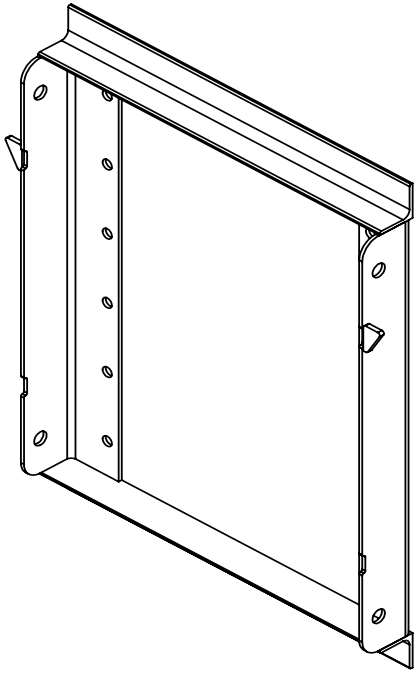

Wallmount Adjustable Bracket dimension 527mm(W) x 711mm(H)