SX-17G

Net wight: 6.1KG (with Stand)
5.3KG (w/o Stand)

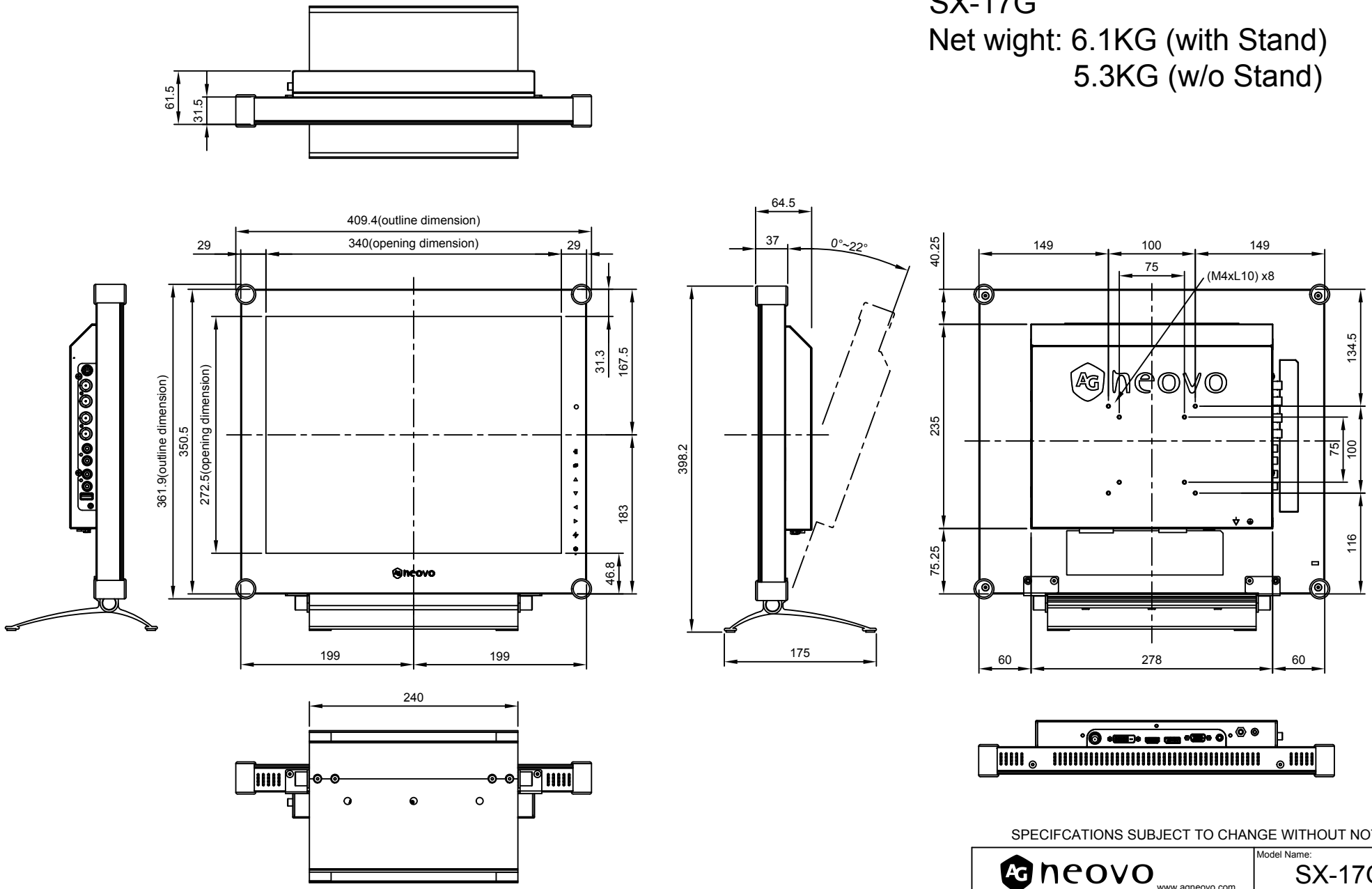

SPECIFCATIONS SUBJECT TO CHANGE WITHOUT NOTICE.

neovo www.agneovo.com		Model Name: SX-17G
THIS DRAWING ON THIS PRINT AND INFORMATION BELONG WITH AG Neovo. ANY REPRODUCTION IN PART OR WHOLE WITHOUT WRITTEN PERMISSION OF AG Neovo IS PROBITIED.	THIRD ANGLE PROJECTION	P/C:SX7G00
	SCALE 1:1	UNITS mm V.1.03