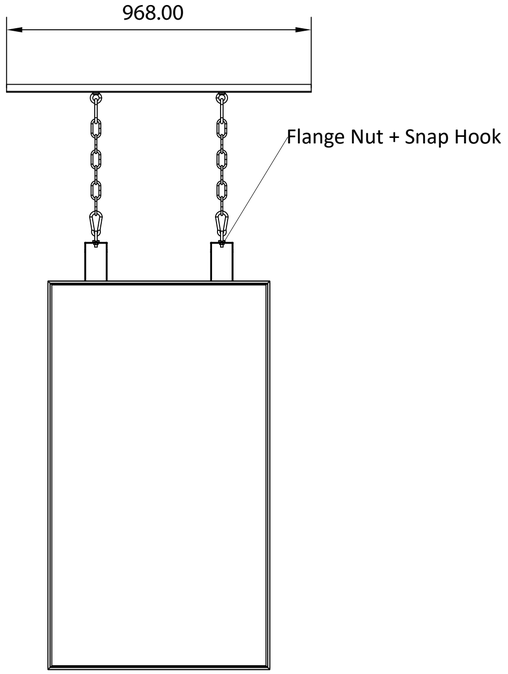

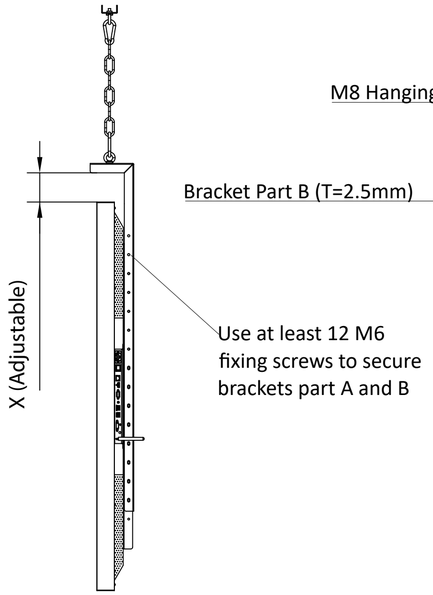

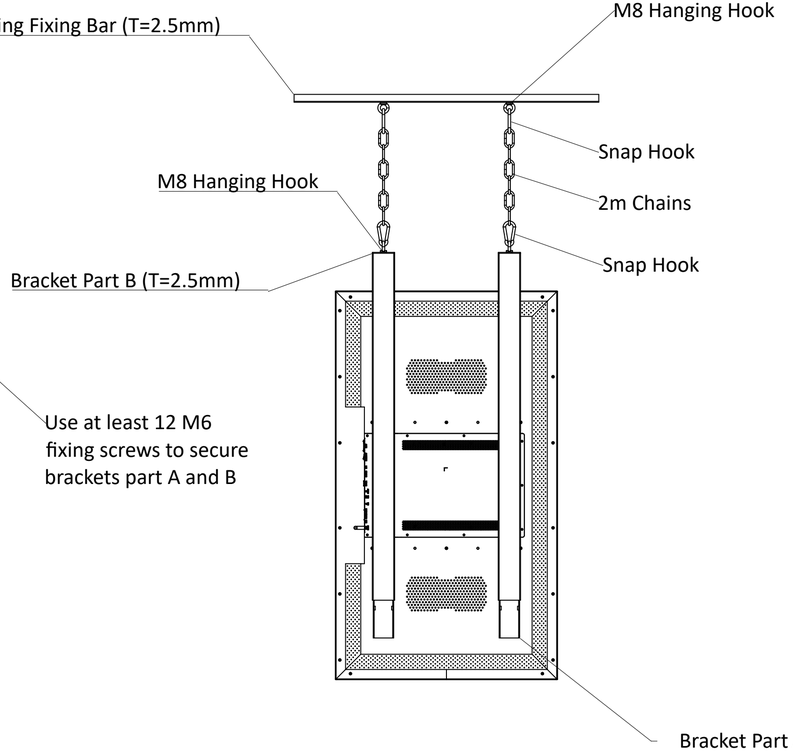

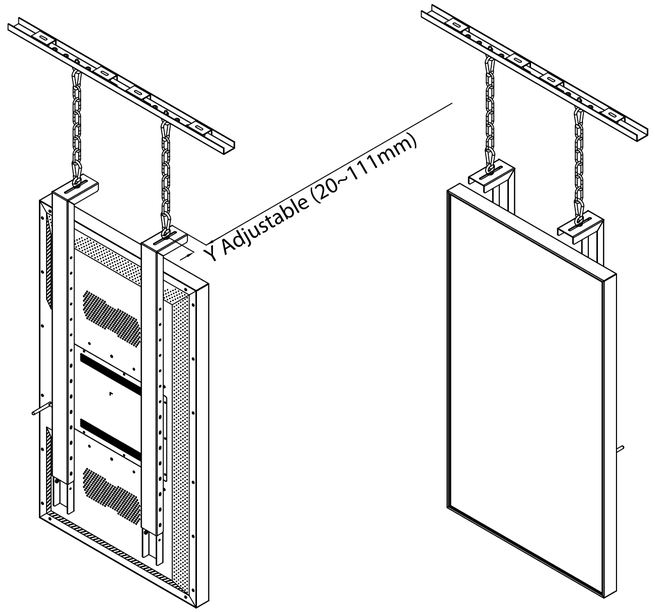

VESA Pattern: 200-600mm M8

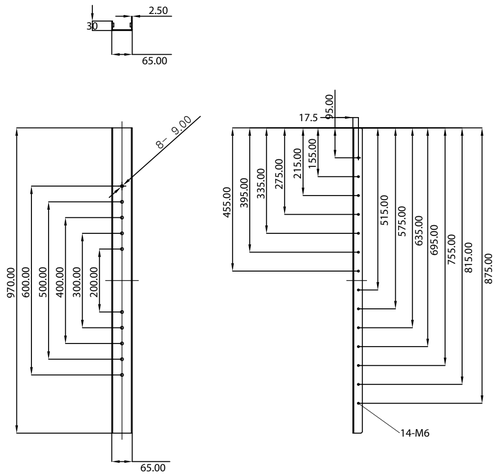

Bracket Part B

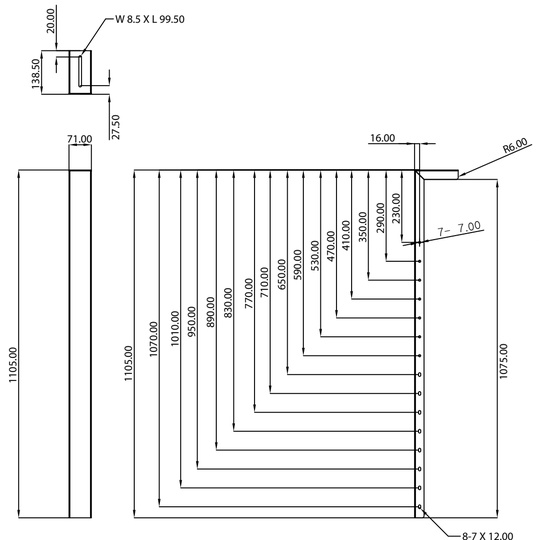

MIN Length of Combined Parts A and B:

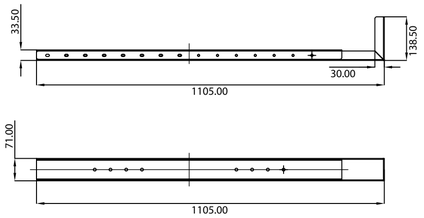

MAX Length of Combined Parts A and B:
Use at least 3 x M6 screws from one side; which means 6 screws per arm, therefore 12 screws in total for two arms to maximise stability.

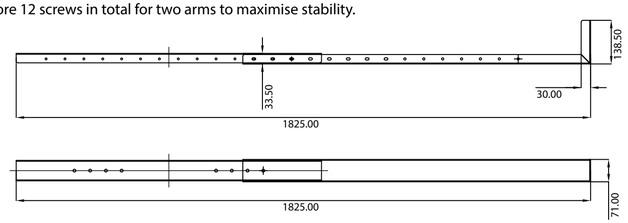
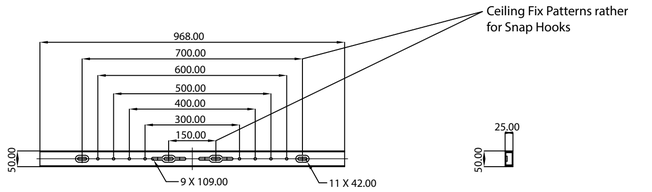
Ceiling Fixing Bar