SHADESCAPES
PO BOX 190 - 39300 BACK RIVER ROAD
PAONIA, CO 81428
TOLL FREE: 888.217.4446
FAX: 888.416.5951
www.shadescapesamericas.com

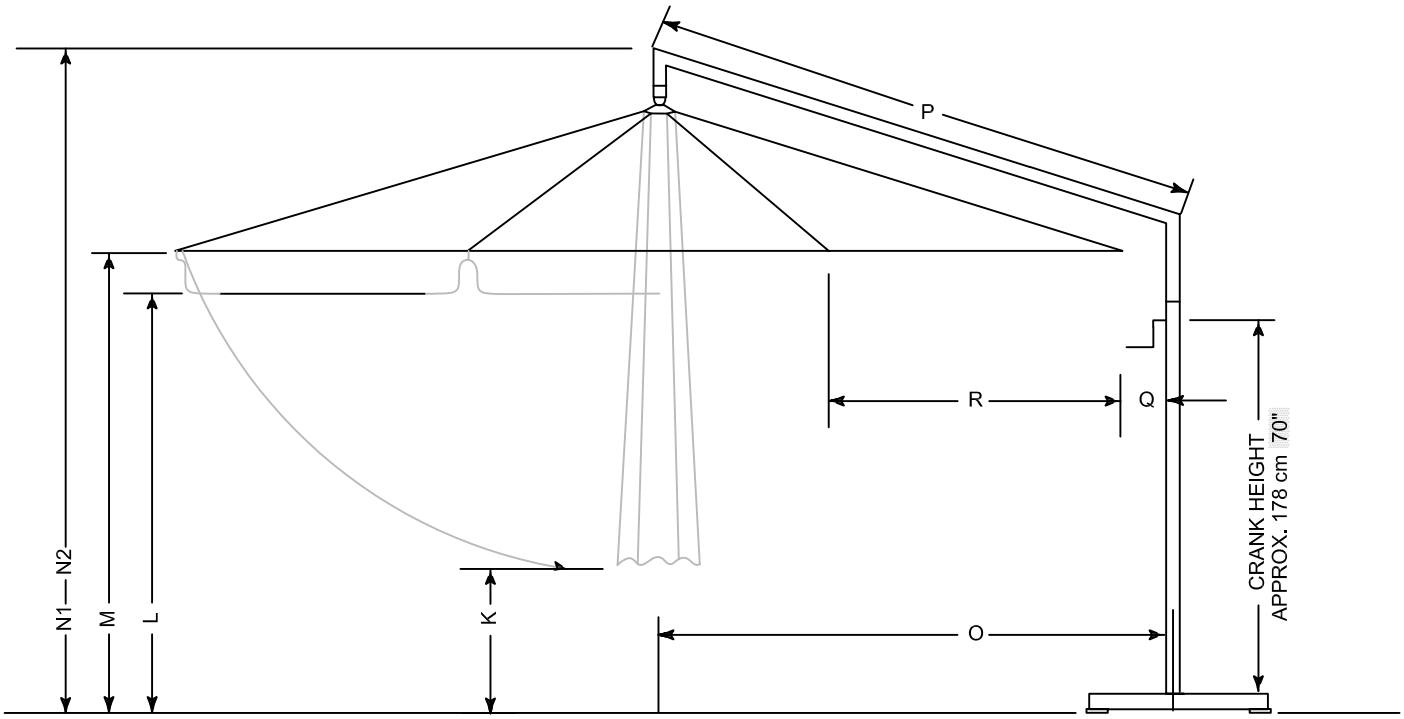

NOTES:

1. INSTALLATION TO BE COMPLETED IN ACCORDANCE WITH MANUFACTURER'S SPECIFICATIONS.
2. ALL IMPERIAL DIMENSIONS ARE METRIC CONVERSIONS AND HAVE BEEN ROUNDED TO THE NEAREST 1". IF EXACT DIMENSIONS ARE REQUIRED, SEE THE MAY METRIC DIMENSIONS.
3. DO NOT SCALE DRAWING.
4. THIS DRAWING IS INTENDED FOR USE BY ARCHITECTS, ENGINEERS, CONTRACTORS, CONSULTANTS AND DESIGN PROFESSIONALS FOR PLANNING PURPOSES ONLY. THIS DRAWING MAY NOT BE USED FOR CONSTRUCTION.
5. ALL INFORMATION CONTAINED HEREIN WAS CURRENT AT THE TIME OF DEVELOPMENT BUT MUST BE REVIEWED AND APPROVED BY THE PRODUCT MANUFACTURER TO BE CONSIDERED ACCURATE.

RIALTO RP CANOPY WITH PIVOT SYSTEM

SINGLE, DOUBLE, TRIPLE AND QUADRUPLE PARASOLS

REVISION DATE 08/06/2015

SHADESCAPES AMERICAS

SHADESCAPES
PO BOX 190 - 39300 BACK RIVER ROAD
PAONIA, CO 81428
TOLL FREE: 888.217.4446
FAX: 888.416.5951
www.shadescapesamericas.com

e	m / ft	Ø3.0	9' 10"	Ø3.5	11' 6"	Ø4.0	13' 1"
K	cm / ft	100	3' 3"	75	2' 6"	55	1' 10"
L	cm / ft	195	6' 5"	195	6' 5"	195	6' 5"
M	cm / ft	200	6' 7"	200	6' 7"	200	6' 7"
N1 NO VALANCE	cm / ft	270	8' 10"	280	9' 2"	285	9' 4"
N2 WITH VALANCE	cm / ft	290	9' 6"	300	9' 10"	305	10'

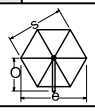

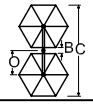

	RIALTO RP		SINGLE WITH 6 SEGMENTS						DOUBLE WITH 6 SEGMENTS					
e		m / ft	Ø3.0	9' 10"	Ø3.5	11' 6"	Ø4.0	13' 1"	Ø3.0	9' 10"	Ø3.5	11' 6"	Ø4.0	13' 1"
s		cm / ft	260	8' 6"	300	9' 10"	345	11' 4"	260	8' 6"	300	9' 10"	345	11' 4"
B		cm / ft	-	-	-	-	-	-	90	2' 11"	53	1' 9"	45	1' 6"
C		cm / ft	-	-	-	-	-	-	610	20'	660	21' 8"	740	24' 3"
D = F		cm / ft	-	-	-	-	-	-	-	-	-	-	-	-
G = H		cm / ft	-	-	-	-	-	-	-	-	-	-	-	-
O		cm / ft	170	5' 7"	190	6' 3"	220	7' 3"	175	5' 9"	190	6' 3"	220	7' 3"
P		cm / ft	185	6' 1"	206	6' 9"	235	7' 9"	185	6' 1"	206	6' 9"	235	7' 9"
Q		cm / ft	20	8"	15	6"	20	8"	15	6"	15	6"	20	8"
R		cm / ft	155	5' 1"	180	5' 11"	205	6' 9"	155	5' 1"	180	5' 11"	205	6' 9"
	WEIGHT WITHOUT PACKAGING	kg / lbs	27	60	29	64	31	68	49	108	54	119	58	128
	SUPPORT POLE DIAMETER	mm / in	OUTER - Ø 76 mm / APPROX. 3"											
	SUPPORT POLE THICKNESS	mm / in	3 mm / APPROX. 1/8"											

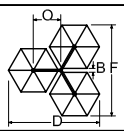

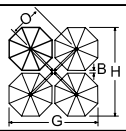

	RIALTO RP		TRIPLE WITH 6 SEGMENTS						QUAD WITH 8 SEGMENTS					
e		m / ft	Ø3.0	9' 10"	Ø3.5	11' 6"	Ø4.0	13' 1"	Ø3.0	9' 10"	Ø3.5	11' 6"	Ø4.0	13' 1"
s		cm / ft	260	8' 6"	300	9' 10"	345	11' 4"	275	9'	325	10' 8"	360	11' 10"
B		cm / ft	50	1' 8"	40	1' 4"	40	1' 4"	40	1' 4"	25	10"	25	8"
C		cm / ft	-	-	-	-	-	-	-	-	-	-	-	-
D = F		cm / ft	570	18' 8"	650	21' 4"	740	24' 3"	-	-	-	-	-	-
G = H		cm / ft	-	-	-	-	-	-	600	19' 8"	675	22' 2"	760	24' 11"
O		cm / ft	175	5' 9"	190	6' 3"	220	7' 3"	220	7' 3"	240	7' 10"	270	8' 10"
P		cm / ft	185	6' 1"	206	6' 9"	235	7' 9"	235	7' 9"	260	8' 6"	290	9' 6"
Q		cm / ft	15	6"	15	6"	20	8"	70	2' 4"	65	2' 2"	70	2' 4"
R		cm / ft	155	5' 1"	180	5' 11"	205	6' 9"	120	3' 11"	135	4' 5"	155	5' 1"
	WEIGHT WITHOUT PACKAGING	kg / lbs	60	132	66	146	72	159	86	190	94	207	102	225
	SUPPORT POLE DIAMETER	mm / in	OUTER - Ø 76 mm / APPROX. 3"											
	SUPPORT POLE THICKNESS	mm / in	3 mm / APPROX. 1/8"											

RIALTO SQUARE IS AVAILABLE IN THE FOLLOWING SIZES:
SINGLE: 3 x 3, 9' 10"
3.5 x 3.5, 11' 6"
DOUBLE: 3 x 3, 9' 10"
3.5 x 3.5, 11' 6"
FOR MORE INFORMATION ABOUT THE RIALTO SQUARE, PLEASE CONTACT SHADESCAPES.

NOTES:

1. INSTALLATION TO BE COMPLETED IN ACCORDANCE WITH MANUFACTURER'S SPECIFICATIONS.
2. ALL IMPERIAL DIMENSIONS ARE METRIC CONVERSIONS AND HAVE BEEN ROUNDED TO THE NEAREST 1". IF EXACT DIMENSIONS ARE REQUIRED, SEE THE MAY METRIC DIMENSIONS.
3. DO NOT SCALE DRAWING.
4. THIS DRAWING IS INTENDED FOR USE BY ARCHITECTS, ENGINEERS, CONTRACTORS, CONSULTANTS AND DESIGN PROFESSIONALS FOR PLANNING PURPOSES ONLY. THIS DRAWING MAY NOT BE USED FOR CONSTRUCTION.
5. ALL INFORMATION CONTAINED HEREIN WAS CURRENT AT THE TIME OF DEVELOPMENT BUT MUST BE REVIEWED AND APPROVED BY THE PRODUCT MANUFACTURER TO BE CONSIDERED ACCURATE.

RIALTO RP CANOPY WITH PIVOT SYSTEM

SINGLE, DOUBLE, TRIPLE AND QUADRUPLE PARASOLS SIZE CHART

REVISION DATE 08/06/2015