TEAR SHEET

Phoebe Extra Large Tray Table Floor Lamp

Item # KW 1619AWC-L

Designer: Kelly Wearstler

Height: 59.5"
Width: 21"
Base: 8.5" Round
Finishes: AWC, CBZ
Shade Treatments: L
Shade Details: 16.75" x 21" x 14"
Socket: E26 Dimmer
Wattage: 15 LED A19
Weight: 43 Pounds
Note: Reactive Ceramic Glazes Will Vary in Color and Texture

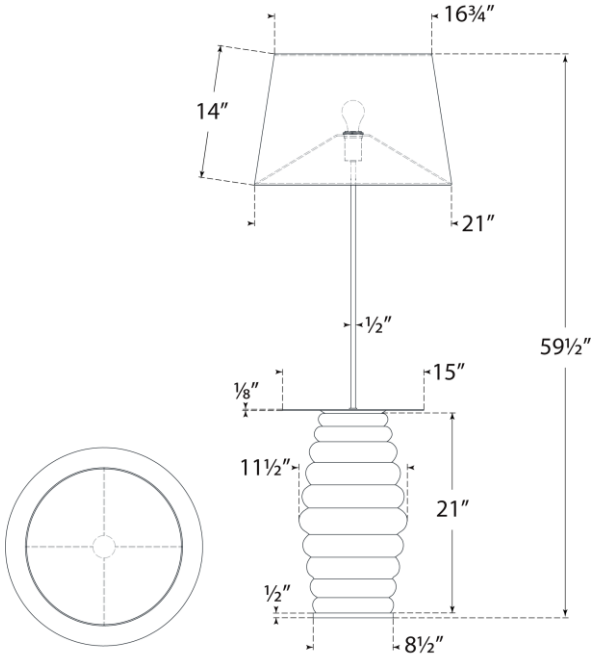

Top View

Front View

VISUAL COMFORT & CO.