INSTALLATION INSTRUCTIONS

For Item#P5333 /P5337-077-L (New. 2022/11/30)

READ AND SAVE THESE INSTRUCTIONS

WARNING! SHUT POWER OFF AT FUSE OR CIRCUIT BREAKER.

AVERTISSEMENT! COUPER LE COURANT AU NIVEAU DES FUSIBLES OU DU DISJONCTEUR.

PREPARATION (Fig. 1)

1. Shut off power at the fuse box or circuit breaker box and remove the old fixture including the mounting hardware.
2. Carefully unpack your new fixture and lay out all the parts in a clean area. Take care not to misplace any small parts necessary for installation.

ASSEMBLING THE FIXTURE (Fig. 1)

3. Adjust cable length while pushing on wire strainer to desired height and to keep fixture level.
4. Determine the desired hanging height by loosening allen screw (G) from bushing (H) by using allen wrench (K) and pushing cord through bushing (H).
5. Secure cord to bushing (H) by tightening allen screw (G) by using allen wrench (K).
6. Position mounting plate (B) to ceiling and mark the location of three drywall anchors (A). Pre-drill holes for drywall anchors (A) and insert drywall anchors (A) into ceiling.
7. Attach mounting plate (B) to the junction box (not included) using screws (C) (Size: #8-32N*L0.5”). The side of the mounting plate (B) marked “GND” must face out.
8. Screw woodscrews (D) through mounting plate (B) and into drywall anchors (A) to secure mounting plate (B) to ceiling.

CONNECTING THE WIRES (Fig. 2)

9. Connect the electrical wires as shown in Fig. 2, making sure that all wire connectors are secured. If your junction box has a ground wire (green or bare copper), connect the fixture’s ground wire to it. Otherwise, connect the fixture’s ground wire directly to the mounting plate (B) using the green screw provided.

COMPLETING THE INSTALLATION (Fig. 1)

10. Place canopy (F) over mounting plate (B) and secure with screws (E).
11. Hang crystals (J) to the fixture body (I).

Your installation is now complete. Return power to the junction box and test the fixture.

Note: Illustration (Fig. 1) on this manual is for installation purposes only. It may or may not be identical to the fixture purchased.

Dimmable with ELV and/or LED compatible wall dimmer switches.

The fixture is over 10 lbs. Please remove all crystals before removing canopy from mounting plate to inspect wire connections in the future. This will allow you to hold the fixture body during wire connection inspection or fixture removal.

IMPORTANT: FIXTURE SHOULD BE INSTALLED BY A QUALIFIED ELECTRICIAN TO ENSURE PROPER WIRING AND INSTALLATION.

Fig. 1

Set# A-021-310110

-Mounting plate

-Ground screw

-Mounting screws*2

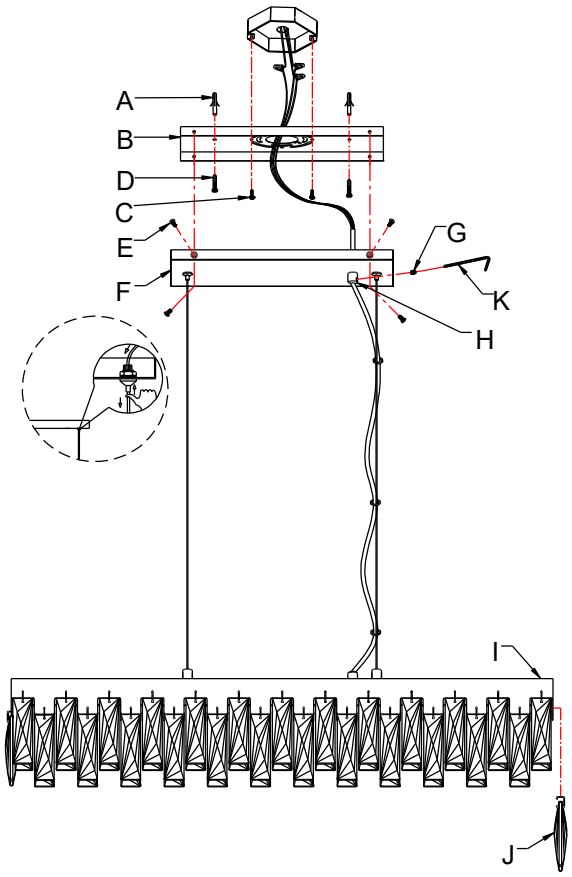

Crystal # PGC5330

Fig. 2

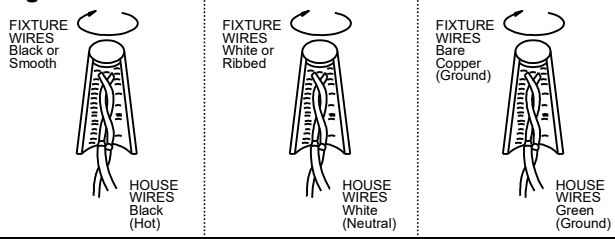

LA-3595E