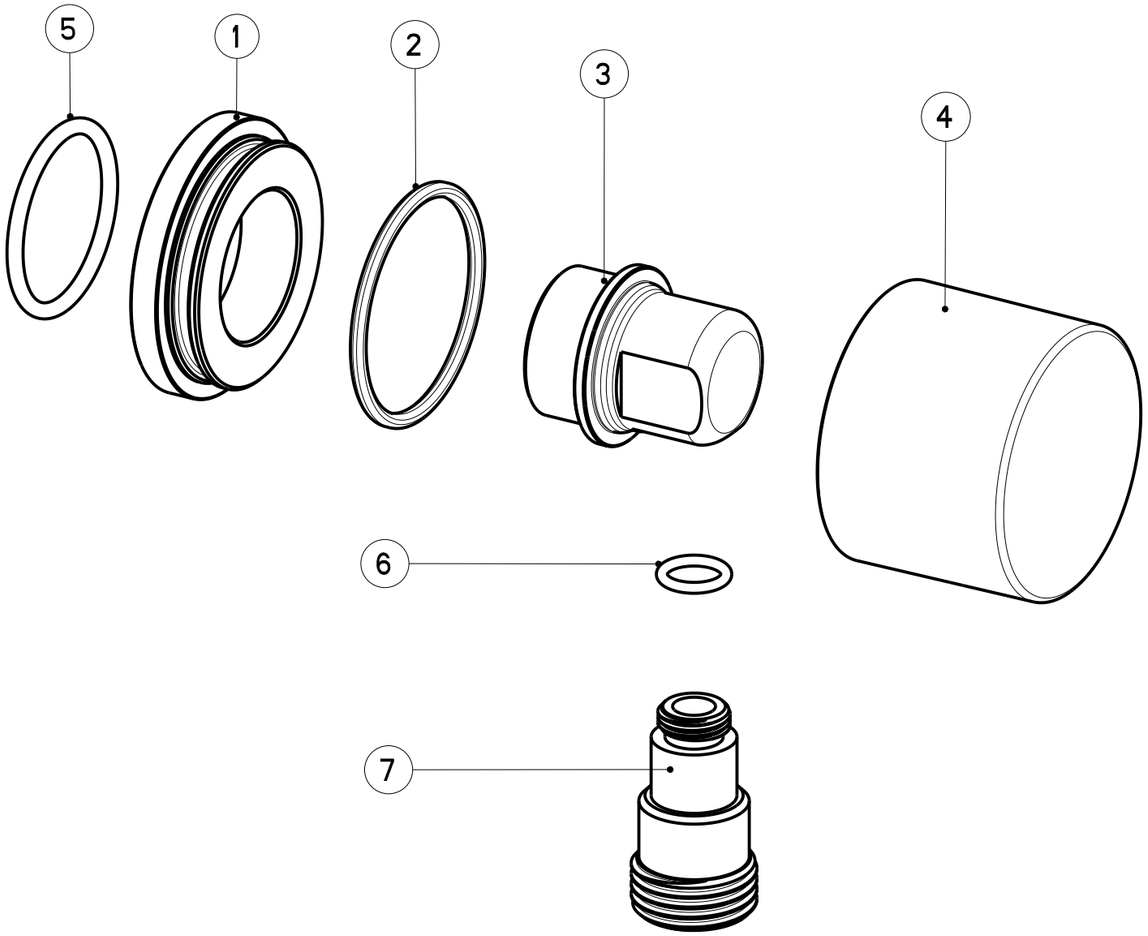

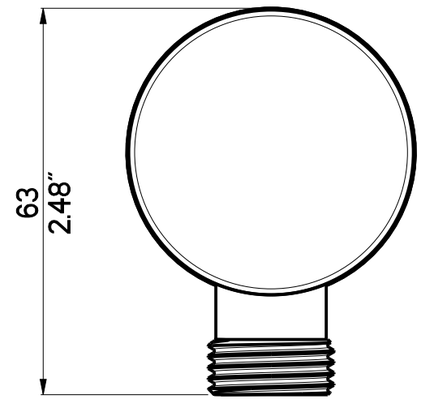

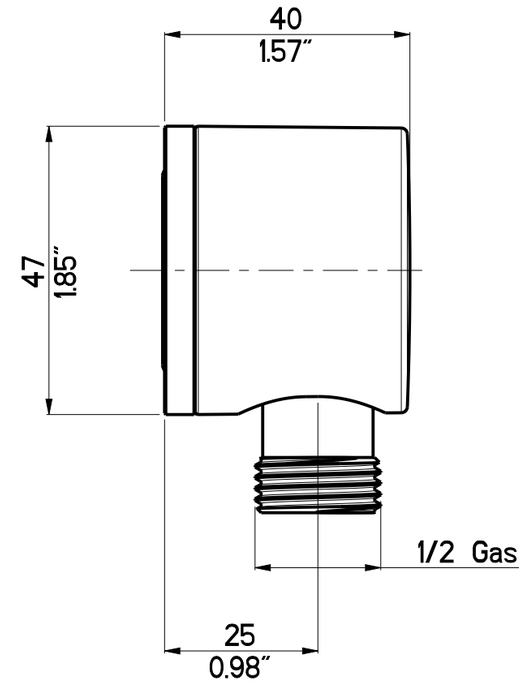

emory&bond

EB29OUT86PC

Chrome Wall Elbow 1/2"

EB29OUT86BN

Chrome Wall Elbow 1/2"

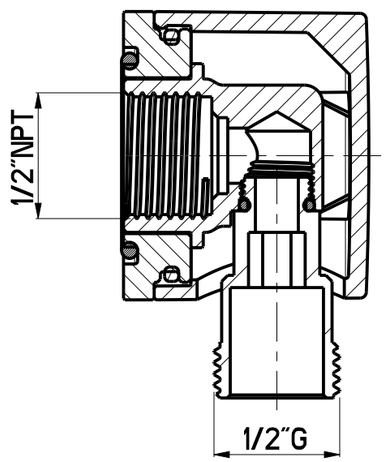

Customer Support:
Call : (973)-482-4444
e-mail: info@emoryandbond.com

www.emoryandbond.com
@emoryandbond