OPERATING MANUAL

3S and 4S

With the FOR U, you have now purchased a product which has been manufactured in accordance with the newest technical capabilities and based on the highest operating comfort.
We have placed great value on the simplest possible operation and long service life in both construction and material selection.
A large variety of useful accessories rounds off our range in addition to the FOR U .

This Operating Manual assumes that the suitability of the user for FOR U . usage has been discussed with a doctor, therapist and/or dealer before operation.

The operating manual will help you get to know the function of our FOR U and, in addition, describes

- operation
- care and maintenance
- repair

Operation and construction will be explained using photographs showing the **3-wheel version** of the FOR U. We will use written information to tell you of any deviations in operation and construction with regard to other versions.

The manual has been drawn up using information available at the time Of printing with regard to construction and operation of the FOR U.
We reserve the right to make changes due to technical improvements.

If you have any other questions about this scooter please contact your retailer or supplier.

Contents

1.0 Safety instructions

1.1 Symbols used

This instruction manual contains the following symbols which are used to highlight special hazards in dealing with the product or information for simplifying the handling.

Caution!
This symbol identifies safety information which notifies you of hazards when dealing with the product.

NOTE
You will also find information about dealing with the product under this symbol.

1.2 Intended use

The KYMCO scooter is Class B, European standard EN 12 184.

It is intended to increase the mobility of persons who are both physically and mentally capable of assessing any driving situations correctly and reacting correspondingly to them at any time.

The 3S and 4S models are classified as an “invalid carriage” for use indoors, on pavements, footpaths, pedestrian zones and areas free from motor traffic.
It must not be driven on public roads with the exception of crossing or when no pavements are available.

1.3 General Information

Read the entire operating manual thoroughly before using the FOR U !

Ensure that:

- the operating manual is read by all people who drive, care for and service the scooter.
- all persons who drive, care for, service or repair the scooter have access to the operating manual at any time.

Any damages resulting from nonobservance of this operating manual are excluded from the guarantee.

Risk of accidents!

- Do NOT use the scooter if your driving capability is impaired through consumption of medicine or alcohol.
- Only use the scooter for its correct intended use.
- Only use the scooter when it is in perfect working order.
- If any breakdowns occur, stop using the scooter immediately and secure it against unauthorized use.
- It is imperative that you always rectify any faults which could influence the function and safety of the scooter immediately.
- Observe maximum loading = see Specifications
- Only use accessories and spare parts authorized by **KYMCO.**
- The scooter is only authorized for transport of one person.
- Do not carry out any seat adjustments while driving.

Tipping hazard!

- Do not adjust the seat if the scooter is standing on an incline.
- Do not lean out over the armrest to the sides or over the backrest to the rear.

1.4 Safety when driving

Risk of accidents!

- Check correct functioning of the brakes before every journey.
- Always use the seat belts when driving.
- Do not switch the scooter off while driving.
- Do not drive up or down gradients which are too steep, over obstacles on gradients or up and down ramps.
  Observe maximum climb angle = see Specifications
- Only drive through restricted widths, around bends, inclines and ramps with reduced suitable speed.
- Only drive up or down inclines when the backrest has been adjusted to vertical.
- Don´t drive too close to open waters.

Tipping hazard!

- Do not carry out any seat adjustments while driving.
- Only drive over obstacles and up kerbstones at the lowest point and at right angles.
- Avoid sudden changes of direction and speed.
- Avoid steep gradients where there is a danger of skidding (ice, snow, wet surfaces etc.).
- Avoid loose surfaces whose characteristics you are not able to assess (woodlands, turf, beaches, gravel etc.)
- Always drive straight up and down gradients - do not drive in zigzags.
- Do not turn around on inclines.
- Do not drive down steps.
- Do not drive backwards down gradients, stairs or kerbstones, or over obstacles.

Danger due to unintentional movement!

- Always turn the scooter off using the keyswitch if you:
  - want to get on or off
  - intend to stop for long periods
  - are putting the scooter away.

1.5 Safety during transport, assembly and maintenance

If the scooter is transported in the vehicle when fully assembled:
- **no persons may sit on the scooter during loading!**
- **no persons may sit on the scooter during transport!**

Clamping and crushing hazard!

Increased hazards due to clamping or crushing result due to the high component weight (such as batteries) during preparation for transport and maintenance work.

- Always carry out any work to be done with great care.
- Always try to get help from a second person, especially when stowing parts for transport.
- Only carry out any work described if you are used to working with the tools required.
- Only carry out work using suitable tools.

Injury hazard due to improper assembly!

- Ensure that all components in the Scooter have been correctly assembled.
- After assembly, check that all locking devices are holding correctly.

Accident hazard due to incorrectly bolted connections!

- If bolted connections have self-locking nuts, ensure that these are replaced when reassembling.
- Do not replace self-locking nuts with normal nuts.
- If bolted connections have lock washers, check lock washers when reassembling and replace if necessary.

1.6 Safety when handling batteries

Fire hazard!

- Do not cover the battery charger and ventilation slot while charging batteries.
- Only use the battery charger in well-ventilated areas.

Risk of accidents!

- Only use the original battery charger (included in delivery).
- Let your dealer replace your battery.
- Only use batteries as detailed in the chapter entitled “Specifications”.
- Observe warning information given by the battery manufacturer.
- Batteries are extremely heavy.

Burn hazard due to damaged batteries!

Batteries discharging acid can lead to serious burns.

- Do not touch damaged batteries with your bare hands. Use rubber gloves!
- If acid should contact your skin, wash the affected area immediately with plenty of water and contact a doctor.
- If acid should come in contact with your eyes, rinse them out immediately with lots of water and visit a doctor.
- Always change any clothing soiled with battery acid immediately.

1.7 Safety - information about electronics

Accident hazard due to failures!

Radio, television, radio transmission devices and mobile phones produce electromagnetic fields. These can negatively influence the scooter electronics functions.

- Do not drive close to strong radio or television transmitters (transmitter masts).
- Switch the scooter off if you are using your mobile phone.

Interference caused to other devices!

The scooter produces an electromagnetic field which can negatively affect functioning of electrical devices such as medicinal devices, radio receivers or mobile telephones within the vicinity.

2.0 Versions and Extent of delivery

2.1 Versions

3-wheel version

4-wheel version

2.2 Extent of delivery

The equipment of the FOR U depends on the options ordered.

After receiving your FOR U, please check the following:

- the completeness of the delivery on the basis of the order form
- the delivery condition using the inspection plan (chapter 14.2)

If any faults are apparent or components are missing, please contact KYMCO or your medical supplier.

The following items are included in delivery in addition to the FOR U:

1. Shopping basket
2. Two vehicle keys for switching the FOR U on
3. Battery Charger
4. Operating Manual

3.0 Components

3.1 The FOR U

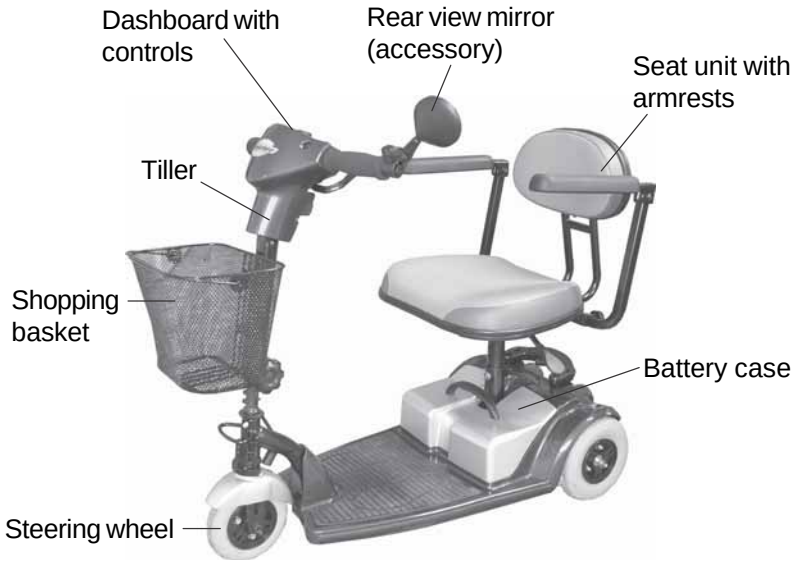

3.2 The dashboard - displays and controls

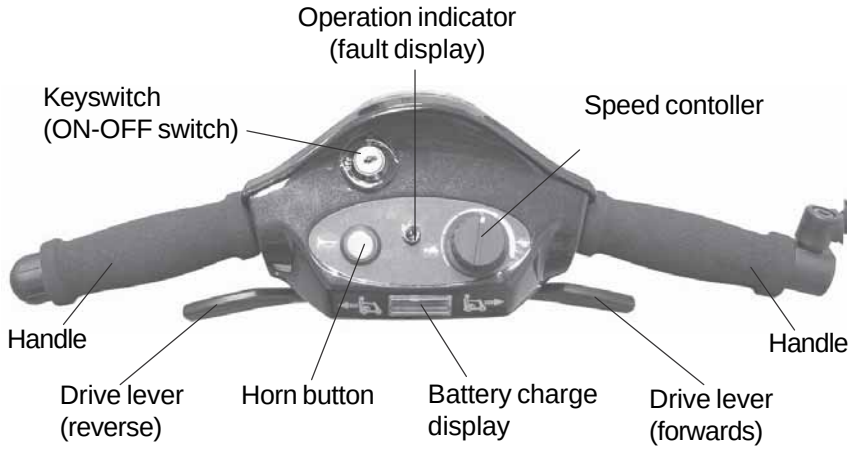

4.0 Brief instructions

The following brief instructions should enable people to quickly get used to operating the scooter after a long period of non-use and to refresh existing knowledge of operation.
It is imperative that you follow the instructions given in the main manual!

4.1 Driving the FOR U

NOTE
Before starting driving, adjust the seat height, the backrest and the armrests to a comfortable position.
Your specialist dealer would be very glad to help.

1.) Turn the seat to the outside.

2.) Get in - turn the seat in the direction of travel

3.) Position restraint system (accessory).

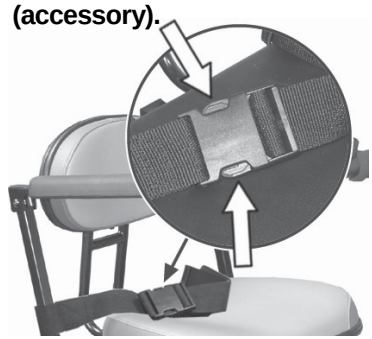

4.) Switch on the FOR U

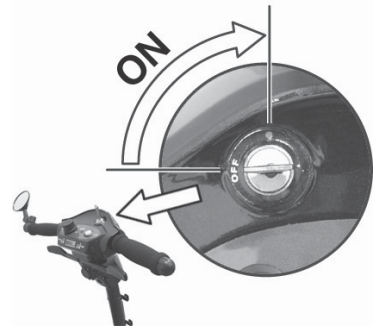

5.) Check the battery

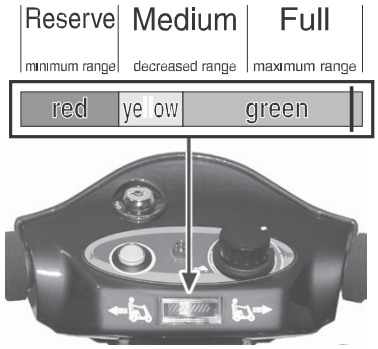

6.) Set the maximum speed

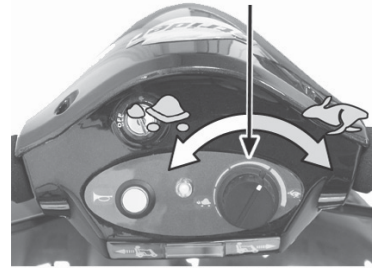

 = lowest possible driving speed (approx. 1.5 mph)

 = highest possible driving speed (approx. 4 mph)

7.) Driving

Operate the drive lever slowly until the required speed has been reached

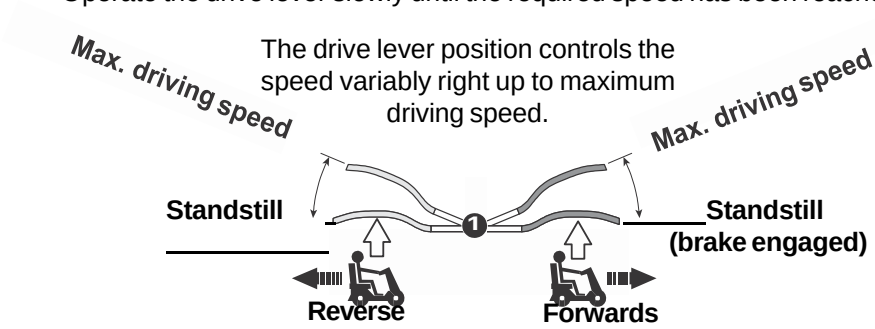

8.) Braking = release drive lever (1)

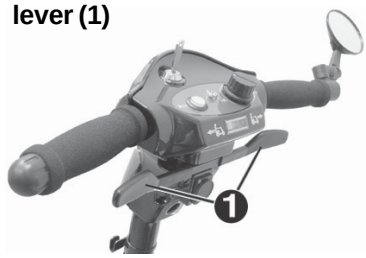

9.) Horn

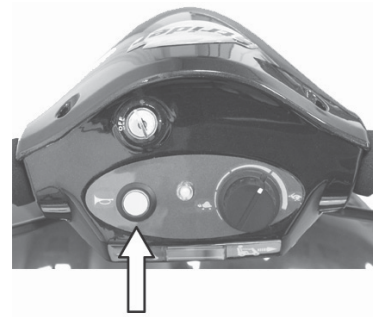

4.2 Transporting the FOR U

1.) Remove the seat

2.) Removing the battery case

3.) Locking the tiller

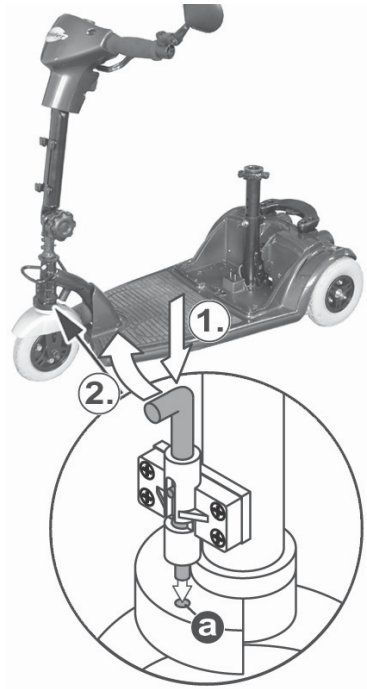

4.) Fold the tiller down

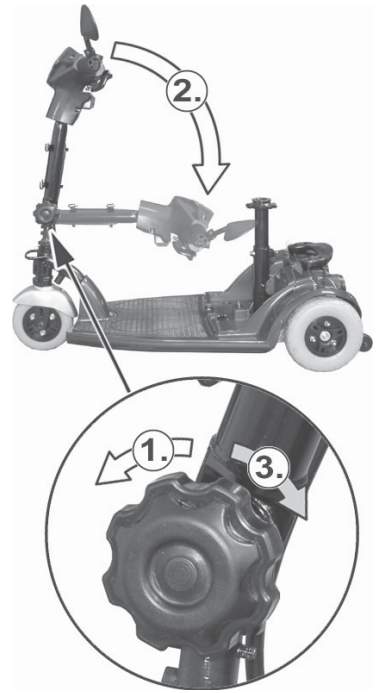

5.) Unlock the drive unit (1.) tilt the drive unit away (2.)

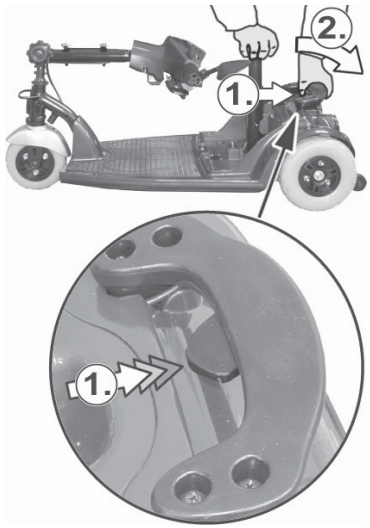

6.) Remove the chassis

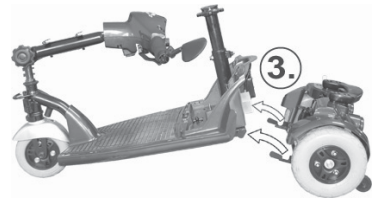

Reassembling the FOR U (Stages 6 to 1)

The FOR U dismantled:

1. Chassis
2. Drive unit
3. Battery case
4. Seat unit

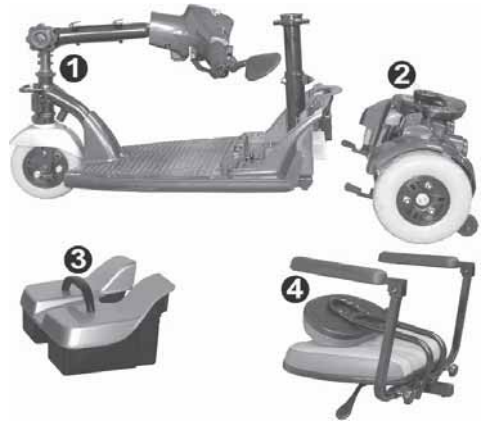

5.0 Setting up the FOR U

The following passage describes how to set up your FOR U in order to ensure that you have a comfortable and safe drive.

5.1 Adjusting the seat height

NOTE!
The seat must be removed from the FOR U in order to adjust the seat height. You should try to get help from a second person if possible or contact your dealer.

Removing the seat:

Tilt the backrest forwards.

Lift the seat while pulling the seat lock (a) out of the seat support.

Removing the seat

Removing the battery case:
Pull the battery case upwards out of the FOR U chassis.

Removing the battery case

Adjusting the seat height:

Tools required:
2 x ring spanner, size 12 mm

Removing the clamping bolt

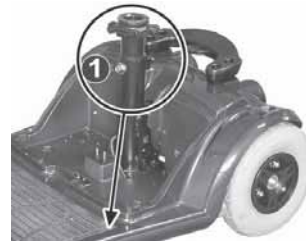

Hold the clamping bolt (2) with a ring spanner (size 12 mm) and unscrew the self-locking nut (3) with the other ring spanner (size 12 mm).

Pull the clamping bolt (2) with the form shim (4) out of the seat support (5).

Adjusting the seat height

The seat height (h) is adjusted using the five holes (B1 - B5) in the seat support.

Adjusting the seat support

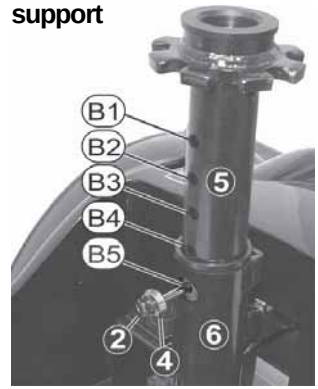

Pull the seat support (5) out as far as the required height until the correct hole (B1-B5) appears in the seat tube hole (6).

Push the clamping bolts (2) with the form shim (4) into the seat tube (6) from the front.

tighten the clamping bolt

Screw the self-locking nut (3) and tighten it (size 14 mm). While doing this, prevent the clamping bolt (2) from turning using a second ring spanner (size 12 mm).

Reinserting the battery case:

Insert the battery case into the FOR U chassis.

Reinserting the battery case

Inserting the seat:

Pull the seat lock (a) and guide the seat into the seat support from above.

Let go off the seat lock and engage the rotational adjustment by turning the seat a little one way then the other.

NOTE
If after inserting the seat it is not possible to turn the seat or to pull the seatlock, the seat is not properly locked.

Inserting the seat

5.2 Adjusting the seat position

5.2.1 Adjusting the armrest width

Adjusting the armrest width

Loosen both clamping screws (1).

Pull both armrests (2) simultaneously to the required width.

Secure the armrests by tightening the clamping screws.

CAUTION!

- Do not pull the armrests further out than the marking (a) for maximum armrest width.

5.2.2 Adjusting the backrest height

Adjusting the bachrest

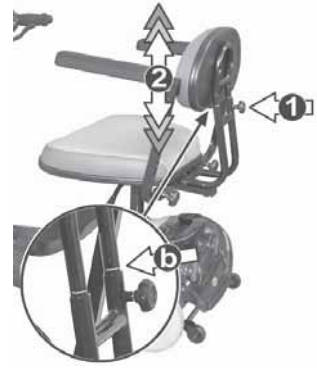

Loosen the clamping screw (1).

Pull the backrest (2) to the required height.

Secure the backrest by tightening the fixing screw.

CAUTION!

- Do not pull the backrest further out than the marking (b) for maximum backrest height.

5.3 Adjusting the tiller angle

Always adjust the tiller so that you can reach all displays and controls easily at any time. The tiller can be variably adjusted.

1.) Loosen the clamping screw.

2.) Push the tiller forwards or backwards into the required position.

3.) Tighten the clamping screw.

Ensure that the tiller is engaged properly by moving slightly forwards and backwards.

adjusting the tiller

Accident hazard due to non-engaged tiller!

- Ensure that the tiller is properly engaged after adjustment by pushing it slightly forwards and then backwards.

6.0 Information about safe FOR U driving

Always carry out the safety information described in chapter 1.4 “Safety when driving“!

Driving the FOR U is very simple and after a few practice sessions you will find it very easy.

The following information should help you to drive safely through traffic:

- always match your speed to the driving situation in which you find yourself.
- always reduce the speed when you are driving through:
  - unclear areas
  - narrow gaps
  - tight curves
  - inclines
  - ramps
- take a trial run with the FOR U in an area with no pedestrians, or in a closed-off area
- always steer the FOR U using both hands on the handlebars
- always keep your feet in the foot area while driving the FOR U

6.1 Driving up inclines and down slopes

The FOR U can climb up inclines of up to **6°** (3S) or **8°** (4S) without danger.

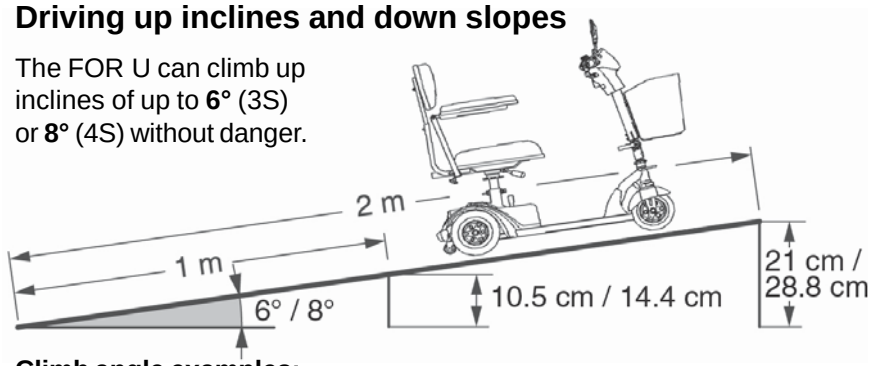

Climb angle examples:
a 1 metre long ramp should not be higher than 10.5 cm (3S) / 14.4 cm (4S)
a 2 metre long ramp should not be higher than 21.0 cm (3S) / 28.8 cm (4S)

- Avoid driving across an incline (always try to drive in the direction of the incline / decline).

There is an increased **danger of tipping** when climbing or descending gradients if:

- the FOR U is loaded at the back and additionally
- you lean your upper body backwards (see sketch).

Tipping hazard!

You can achieve increased **tipping safety** if:

- you adjust the seat in a more forward position.
- you lean your upper body slightly forwards (see sketch)

Increased tipping safety

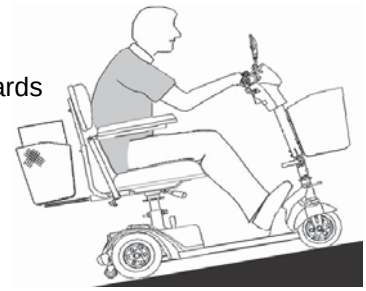

6.2 Overcoming obstacles

The FOR U can climb over obstacles such as kerbstones up to height of **5 cm** without any problem.

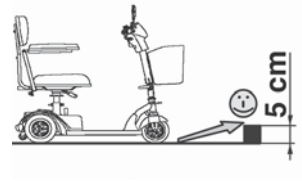

Please observe the following points to make sure that your FOR U doesn't tip over while climbing obstacles:

- don't try to drive over obstacles which are too high
  example: kerbstones
  remedy: always climb up kerbstones at lowered entry areas such as driveways.

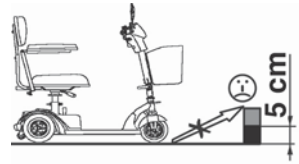

- **DO NOT** try to climb an obstacle when on an incline.

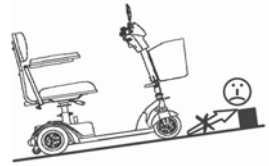

- approach the obstacle at a right angle
- try to clear the obstacle in one go.

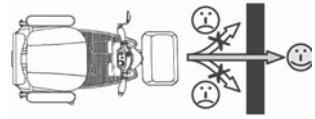

- **DO NOT** drive over the obstacle with just one wheel.

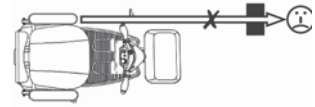

- **DO NOT** drive backwards over an obstacle.

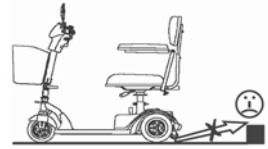

- **DO NOT** drive backwards down a kerb.

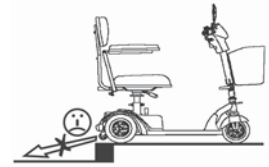

- **DO NOT** drive down stairs or steps.

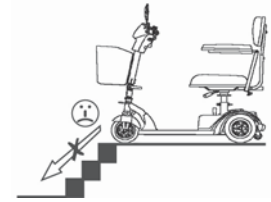

6.2.1 Driving Information – Overcoming kerbs

Risk of accidents!

Neogating kerbs needs practice.

- Please observe the maximum obstacle heights of **5 cm**.
- Please start practicing kerb climbing with small kerbs.

Approach at a right angle

Approach the kerb at a right angle.

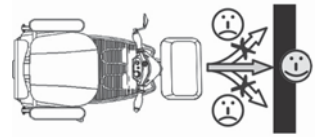

Stop in front of the kerb

Stop approximately 0.5 Meter / 19 inches in front of the kerb.

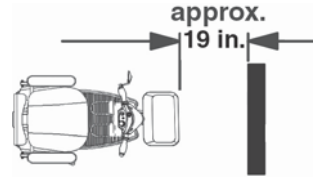

Adjust the speed-controller

Adjust the speed controller to maximum speed.

Overcome kerb

Press the drive lever fully forward and try to clear the kerb in one go.
The speed of the scooter should only be at 1 mph when the front wheel hit the kerb.

Keep the drive lever in the fully forwards position until the rear wheels have cleared the kerb.

6.3 Overload protection - motor protection

The overload protection switches the drive off if the motor becomes overloaded by trying to climb over too high an obstacle such as a kerbstone, or if you try to climb too steep of an incline.

If the motor is overloaded, the following happens:

- the FOR U becomes noticeably slower and then stops
- the control system switches the FOR U off

To rectify this:

Switch the scooter off and allow it to cool down for a few minutes.

Switch the scooter on again and ...

... reverse away from the **obstacle** (such as kerbstone) and then try again at a lower point.

... be careful turning the scooter around on inclines, and always reverse away very slowly.

Tipping hazard!

There is an increased tipping hazard if the incline is very steep.

- Try to get help from a second person when turning your scooter around.

Accident hazard in push mode!

If the incline is too steep, there is a danger that you will not be able to hold onto the scooter and that it will roll down the incline uncontrolled.

- Try to get help from a second person when turning your scooter around.

6.4 Battery charging state = driving range

6.4.1 Battery charging state

Battery charge display:
The battery charger display on the dashboard shows the battery charging state.

Battery charge display

Display ranges

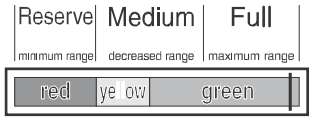

Full = maximum range

Medium = decreased driving range, charge batteries after journey

Reserve = minimum driving range, end journey as soon as possible, charge batteries

Important information about reading the battery charge display:

- If the scooter is at standstill, it is often the case that the battery charging state is shown higher than it actually is.
- The display can vary greatly while the vehicle is travelling (depending on load).
- If the vehicle is under heavier loading (for example heavy acceleration, driving up hills), the pointer can sometimes go to the red area of the display. This is not critical and does not indicate the actual charging state of the batteries.
- If the pointer has gone into the red area of the display after the journey, it will often show green after the FOR U has been turned off for a long period.
  This does not indicate the actual charging state of the batteries!
  If the pointer is in the red area of the display at the end of the journey, the batteries must be charged before continuing the journey.
  Disregarding this can lead to destruction of the batteries!

Determining the actual charging state:

Drive at a constant speed for about 200 m along a straight leve route. The value shown by the display during the journey is the actual battery charging state.

6.4.2 Driving range

The FOR U driving range is dependent on the following conditions in addition to battery charge:

- landscape conditions (level or steep)
- weight of user
- weather conditions (cold, rain)

For this reason, information about the driving range is only given as a guideline. The more experienced you are in using the FOR U, the easier it will be for you to determine the driving range using the battery charging state.

You will be able to achieve the best possible driving range if you:

- ensure that the tyres are inflated correctly
- avoid steep inclines as much as possible
- do not carry any unnecessary luggage
- drive at an even speed
- do not accelerate or brake unnecessarily

The driving range will be decreased if you:

- drive in cold weather
- drive in hilly regions

NOTE
please see the information about batteries in the Appendix.

6.4.3 Overdischarge protection - battery protection

In order to protect the batteries from over-discharging, the control unit switches the FOR U off. This takes place when the battery voltage falls below 17 Volts.

Display:
the battery charger display pointer is pointing to the left at the end of the red area.

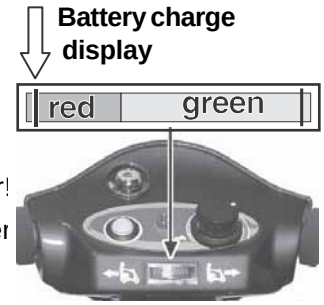

To rectify this:

You must not drive the FOR U any longer!

Connect the FOR U to the battery charger and charge the batteries for at least 12 hours.

NOTE
If the battery voltage falls below 16 Volts, the batteries can no longer be charged with the battery charger supplied. In this case you must contact your dealer.

7.0 Driving the FOR U

7.1 Getting on and off

Please observe the following before getting on or off:

- The FOR U must be standing on firm, level and non-slippery ground.
- The engaging lever for push mode must be in the drive position (chapter 8.0)
- **Turn the FOR U off** and remove the key.
- Tilt the steering column forwards (chapter 5.3)
- When getting in and out, ensure that your clothing does not get caught on the drive lever.

Turning the seat

Getting on or off:

Pull the turning lock (1) on the seat forwards.

Turn the seat 90° towards you (2) and engage.

After you have got onto the FOR U, pull the seat lock (1) forwards again, turn the seat to face the direction of travel (4) and engage.

getting on

Accident hazard due to non-engaged seat!

- Ensure that the seat is properly engaged after getting on by turning the seat slightly left and right.

NOTE!
If you feel you are safe enough, you can of course get onto the FOR U without turning the seat round.

- You can lift up the armrest on the side where you are standing and then get on.

7.2 Seat belt (accessory) - adjusting for length and putting on

Adjusting for length:

Turn the seatbelt closer (1) at right angles to the seat belt.

Adjust the length by pulling the appropriate belt side.

(a) = shortening the belt length

(b) = lengthening the belt length

Tension the loose seatbelt end by pulling the belt holder (2).

Adjusting for length

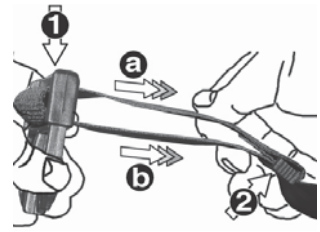

Closing the seatbelt:

Press the closer (1) into the lock until it audibly engages.

Closing the seatbelt

7.3 Turning the seat

The seat can be turned to both sides of the angle, and firmly engaged in 8 positions (each position turns 45°).

Turning the seat:

Pull the turning lock (1), turn the seat in the required direction or position (2) and engage.

Accident hazard due to incorrect seat position!

- Always turn the seat to face forwards and engage it before driving.

If the seat has been turned, the possibility of tipping is increased.

- Before turning the seat, always ensure that the scooter is on an even and solid surface.

7.4 Switching the FOR U on

The switch (1) is located on the dashboard.

Insert the key into the switch and turn it to the right to switch the FOR U on.

Switching the FOR U on

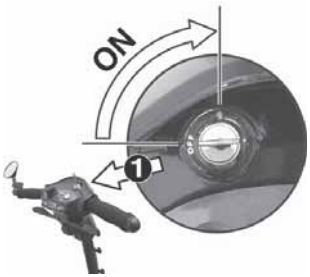

7.4.1 Operation indicator and fault display

This light shows that the FOR U is switched on and ready for driving.
It also displays any errors in the FOR U electronics and electrical system. Fault display takes place using different blinking speeds or blink sequences. You can find more information in the chapter entitled “Troubleshooting”.

Operation indicator

7.5 Adjusting the speed

Your maximum driving speed can be variably adjusted using the speed controller.

Maximum driving speed = drive lever pressed as far as stop

Controller symbols:


= lowest possible maximum driving speed (approx. 1.5 mph)


= highest possible maximum driving speed (approx. 4 mph)

Adjust the required maximum driving speed by turning the speed controller.

Speed controller

NOTE
Use the controller to adjust the speed to suit local conditions. Select a lower speed if you are driving through narrow gaps, on inclines or through crowds.

7.6 Before driving

Checks before driving:

• Are the batteries charged?	Check the display!	in working order!
• Are the brakes working?	To check, drive slowly and stop again!	in working order!
• Are the tyres and wheels undamaged?	Visual check of tyres and wheels!	in working order!
• Is the tiller locking device unlocked?	Observe chapter 12.4.3 !	in working order!

Only start driving if everything is in working order! Get defects repaired immediately.

7.7 Driving

Accident hazard due to locked tiller!

- Before driving off, turn the tiller to check that it is not locked. Observe chapter 12.4.3.

Hold the tiller firmly in both hands.

Press the drive lever (1) in the direction of travel until the required speed has been reached.

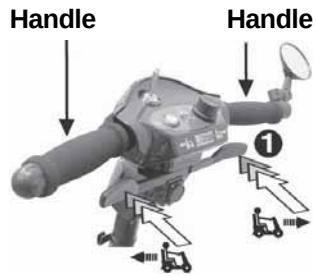


= driving forwards


= driving in reverse

The drive lever position controls the speed variably right up to maximum driving speed.

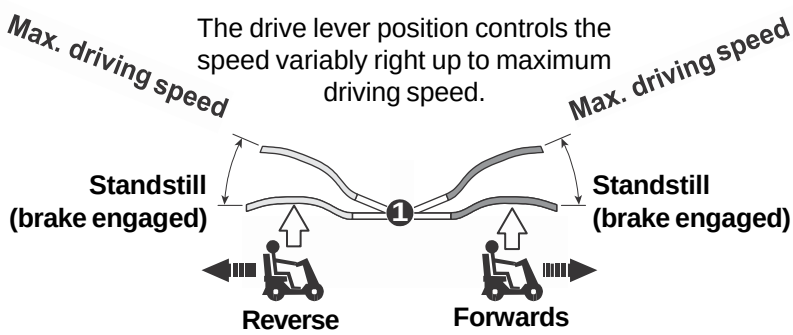

7.8 Using the motor brake

Let go of the drive lever (1).

The drive lever stops in the central position - the FOR U uses the motor to brake.

Emergency braking = let go of the drive lever!

The drive lever automatically returns to the central position if you let go. The FOR U automatically brakes using the motor.

7.9 Using the horn

Press the horn button (5).

It will sound for as long as you hold the button down.

Using the horn

7.10 Switching off / parking the FOR U

Turn the key to the left to switch the FOR U off.

Always turn the FOR U off using the keyswitch (1) if you:

- want to get on or off.
- intend to stop for long periods.

Always remove the key from the keyswitch if you:

- want to park the FOR U and get off.

Switching the FOR U off

8.0 Pushing the FOR U

In order to be able to push the FOR U, you must disengage the drive motor.
The disengaging lever (1) is located on the right-hand side of the FOR U.
No one is permitted to sit on the FOR U when it is being pushed.

Disengaging the drive

= Pushing (a):

Switch the FOR U off.

Push the disengaging lever (1) forwards as far as the stop (limit position).

= Driving (b):

Pull the disengaging lever (1) to the rear as far as the stop (limit position).

NOTES

- Always switch the FOR U off to push it.
- If a pre-set speed is exceeded while you are pushing the FOR U, the drive motor will switch on automatically and brake the FOR U.

Risk of accidents!

- Do not pull the disengaging lever while driving.
- Never switch the FOR U to push mode when somebody is sitting on it.
- The engaging lever always needs to engage securely at the limit position.
- Do not disengage the motor when on an incline.

9.0 Attaching the shopping basket

Push the shopping basket (1) from above into the basket holder receptacles (2) on the tiller.

NOTE
Use the shopping basket only for small loading.

10.0 Charging the batteries

Please also see the information given in the chapter entitled “Things to know“.

Charging information:

- The surrounding temperature should be between 10° and 30° Celsius. The charging time will increase at lower temperatures.
- Only use the original battery charger (included in delivery).
- Only use the battery charger in a dry and well-ventilated room.
- Do not cover the battery charger and ventilation slot while charging batteries.
- The battery charger has an automatic switch-off device which prevents overcharging the batteries. Do not leave the battery charger connected to the scooter for more than 24 hours.
  - The batteries can be charged overnight.
- Switch the FOR U off before charging the batteries.

When is charging required?

- the battery charge display is in the red area
- after the final journey of the day
- at least once per week

Charging times:

Between 8 and 14 hours depending on current battery charge state.

NOTE
The battery charger is designed to be able to charge completely discharged batteries within eight hours to 80% of their capacity.

10.1 Preparing the battery charger

Plug the mains cable plug (1) into the jack socket (2) on the battery charger.

Connect the mains cable

10.2 Charging the

10.2.1 Charging the batteries in the FOR U via the tiller

Switching off

Engaging

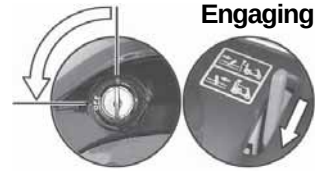

Switch the FOR U off.

Engage the engaging lever for push mode into the “drive“ position.

It is imperative that you observe the sequence for connecting and disconnecting the battery charger.

The jack socket (3) for connecting the battery charger is located on the tiller.

Connecting the battery charger

(1.) Connect the battery charger plug (4) to the FOR U charging socket.

(2.) Connect the battery charger mains plug (5) to a mains socket and switch on.

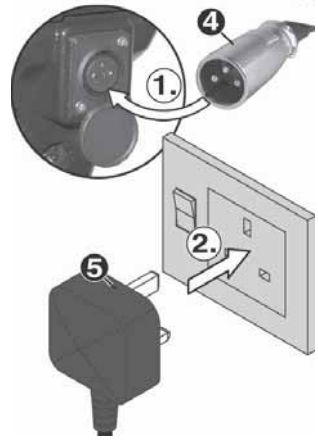

NOTE:
The battery charger switches on automatically when connected to the mains.

10.2.2 Charging the batteries in the battery case (when removed from the FOR U)

Removing the battery case

Remove the battery case upwards out of the FOR U chassis.

It is imperative that you observe the sequence for connecting and disconnecting the battery charger.

The jack socket (2) for connecting the battery charger is located on the rear of the battery case.

Connecting the battery charger

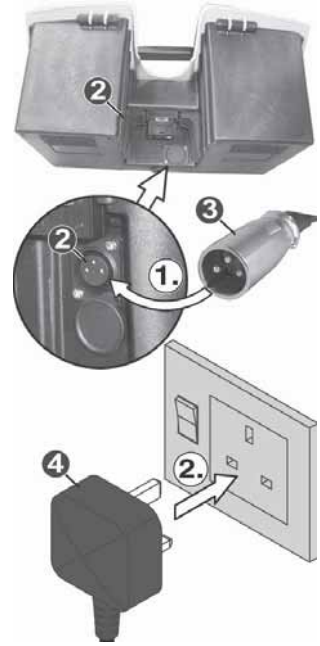

(1.) Connect the battery charger plug (3) to the battery case charging socket.

(2.) Connect the battery charger mains plug (4) to a mains socket and switch on.

NOTE:
The battery charger switches on automatically when connected to the mains.

10.2.3 LED information at battery charger during charging

LED -> Colour -> Meaning

(a) -> Red -> battery charger

(b) -> orange -> charging in progress

-> Green -> charging complete, battery completely

LED

10.3 After charging

(1.) Switch off and remove the battery charger plug from the mains socket.

Removing the mains plug

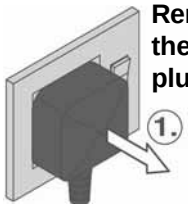

Removing the battery charger

(2.) Pull the battery charger jackplug out of the FOR U or battery case jack socket.

11.0 Things to

11.1 The battery charger - functioning principle

The battery charger regulates the voltage (Volt) and the current (Ampere) from your mains connection down to the voltage required for charging your batteries (24 Volt). The amount of charging current required is dependent on the charging state of the discharged batteries.

Batteries mostly discharged = more charging current

Batteries half discharged = decreased charging current

Batteries completely charged = no charging current

Since no charging current is flowing when the batteries are full, the batteries cannot be overloaded.

11.2 The batteries

The entire power supply is taken over by two 12 V batteries. These are located in a removable battery case beneath the seat. The batteries used in the FOR U are known as batteries for cyclic use. Only enclosed maintenance-free deep cycle batteries are used.
The battery case is fitted with its own charging socket. This means that it is possible to charge the batteries when separated from the FOR U (Chapter 10.2.2).

11.2.1 What are batteries for cyclic use?

Batteries for cyclic use are designed, in contrast to starter batteries as used in cars, so that they deliver continuous energy over a longer period of time and allow a considerable number of charging phases.

11.2.2 When do the batteries achieve their maximum performance?

Fixed cycle batteries achieve a maximum performance after four or five charging and discharging cycles. Only at this point is their internal chemical equilibrium achieved so that they can produce maximum performance and service life.

11.2.3 How do I make sure the batteries achieve their best service life?

- Always charge your batteries completely after use.
- Charge your batteries regularly.
- Only store completely charged batteries in the vehicle.

11.3 The auto switch-off

The auto switch-off automatically switches the FOR U off after 20 minutes at a standstill.
This protects the batteries from being discharged if the FOR U was inadvertently not switched off.

11.4 The drive unit

The complete drive unit is located in the rear of the FOR U and consists of the following main components:

- the battery case (1)
- the control unit and
- the drive motor with rear axle (2)

NOTE
The control unit and its cabling is protected by a shroud (3).

Drive unit

11.5 The working principle

The drive consists of the drive motor, the gearbox and the rear axle. Drive takes place from the drive motor via the gearbox and rear axle to the rear wheels .

11.6 The control unit

The control unit is a programmable electronic regulating unit. It regulates drive characteristics such as acceleration, maximum speed and braking behaviour.
The drive characteristics can be set to match the user's requirements by altering the programming.
Reprogramming may only be carried out by specialist dealers.

11.7 Anti tipping wheels

The anti tipping wheels (4) reduce the danger of tipping during extreme manoeuvres when fixed to the rear of the FOR U.
It is not permitted to drive the FOR U without anti tipping wheels.

Anti tipping wheels

Wheels and tyres

11.8 Wheels and tyres

The FOR U is fitted with puncture-proof tyres.

11.9 Brakes on the FOR U

The FOR U is automatically braked if the drive lever (5) is in the central position.
To apply the brakes, simply let go off the drive lever which is then returned to its central position by a spring.
The FOR U is then braked by the drive motor. When the FOR U is at a standstill or has been switched off, it is braked by a magnetic brake.

Drive lever

11.10 The tiller lock

The handlebar of the FOR U can be locked in the straight-ahead position using the tiller lock (6) to enable transport. This prevents uncontrolled handlebar movement.

Tiller lock

11.11 Driver´s licence

Not required!

11.12 Insurance

As a scooter user you must be aware of the risks involved to both yourself and others. It is recommended that you take out third party insurance to cover you against any possible claims. Advice and policies are available from insurance companies or alternatively ask your scooter supplier for details.

11.13 Approval for road traffic use

The FOR U is not defined as motor vehicle, but is a Class 2 Type invalid carriage. This type of scooter is for use on pavements and pedestrian areas with the exception of crossing roads.
Use on public roads only permissible when no pavement is available.

12.0 Transporting the FOR U

12.1 Transport information

Depending on the size of the transport vehicle, the FOR U can be dismantled in a few steps so that it can also be easily transported in smaller vehicles.
When transporting, take particular care to ensure that the batteries are securely fastened and make sure components cannot tip over.
No liability can be accepted for damage caused by transportation.

12.2 Transporting the complete scooter

No persons are permitted to sit on the scooter during loading!

No persons are permitted to sit on the scooter during transport!

Drive or push the FOR U up a ramp into the vehicle.

Switch the engaging lever to drive mode.

Secure the FOR U against tipping over by fastening it to the transport vehicle with transport straps.

12.3 Preparation for transport - separating components

Clamping and crushing hazard!
Increased hazards due to clamping or crushing result due to the high component weight (such as batteries) during preparation for transport.

- Always carry out any work to be done with great care.
- Always try to get help from a second person, especially when stowing parts for transport.

In just a few steps you can dismantle the FOR U down to the following components to make it ready for transport:

1. Chassis
2. Drive unit
3. Battery case

12.3.1 Working step summary

1. Remove the seat.
2. Remove the battery case.
3. Locking the tiller.
4. Fold the tiller down.
5. Disengage the drive unit from the chassis.

12.3.2 Removing the seat

Tilt the seat backrest forwards.

Lift the seat while pulling the seat lock (a) out of the seat support.

Removing the seat

12.3.3 Removing the battery case

Remove the battery case upwards out of the FOR U chassis.

Removing the battery case

12.3.4 Locking the tiller

Locking the tiller

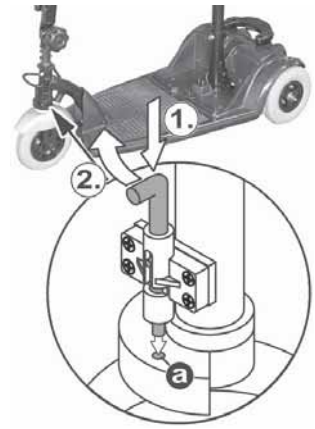

Turn the tiller to face straight ahead.

1.) Push the locking lever into the drilling (a) of the steering lock and

2.) turn it through 45°.

NOTE
In the case of the 4-wheel FOR U, turn the steering column to the side and then lock.

12.3.5 Folding the tiller down

Folding the tiller down

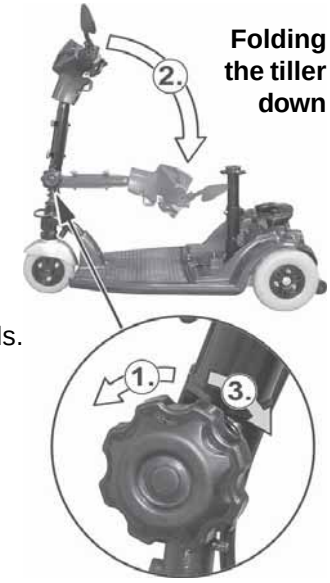

1.) Loosen the clamping bolt.

2.) Fold the tiller down towards the rear until it is horizontal.

3.) Tighten the clamping bolt.

Ensure that the tiller is engaged properly by turning slightly forwards and backwards.

12.3.6 Disengaging the drive unit from the chassis

Tilt the drive unit away

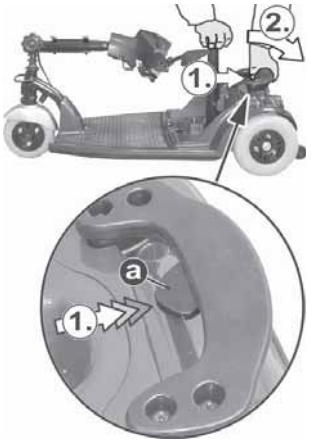

1.) Pull the locking device (a) and
2.) tilt drive unit to the rear onto the anti tip wheels.

Separating the chassis

3.) Remove the chassis upwards from the drive unit.

NOTE
Use the grip to stowe the drive unit.

12.4 After Transport - Reassembly

Working step summary:

1. Re-couple the drive unit.
2. Fold the tiller up again.
3. Unlocking the tiller.
4. Insert the battery case.
5. Fit the seat.

12.4.1 Engaging the drive unit to the chassis

1.) Locate the chassis holding bolts (1) into the guides (2) at the drive unit.

Connecting the chassis

2.) Fold the drive unit forwards.

Folding the drive unit in

Clamping and crushing hazard!
Pay particular attention to hazards caused by trapping and crushing while carrying out this work.

Accident hazard due to locking device not engaged!

- Ensure that the drive unit locking device audibly engages into the chassis.
- Before inserting the battery case, ensure that the locking device is correctly engaged.

NOTE
If the lock does not engage, then the lock counterstop on the drive unit will have to be adjusted.
You can find information about adjustments in Chapter 16.7 „Repairs“.

12.4.2 Folding the tiller up

Folding the tiller up

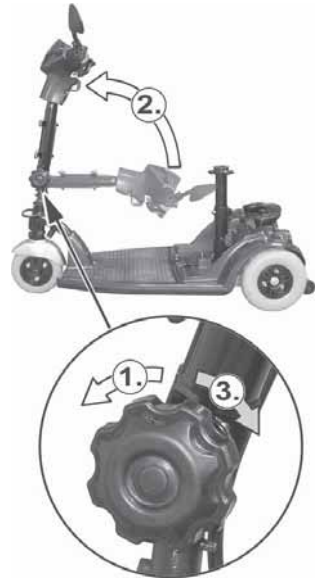

1.) Loosen the clamping bolt.

2.) Fold the tiller into the required position.

3.) Tighten the clamping bolt.

Ensure that the tiller is engaged properly by moving slightly forwards and backwards.

Accident hazard due to non-engaged tiller!

- Ensure that the tiller is properly engaged after adjustment by pushing it slightly forwards and then backwards.

12.4.3 Unlocking the tiller

Unlocking the tiller

Turn the locking lever (1) through 45° in its central position. The locking lever then returnes to its unlock position by a spring.

Accident hazard due to locked tiller!

- Ensure that the tiller is unlocked before driving.

12.4.4 Reinserting the battery case

Insert the battery case into the FOR U chassis.

Reinserting the battery case

12.4.5 Fitting the seat

Pull the seat lock (a) and guide the seat into the seat support from above.

Let go off the seat lock and engage the rotational adjustment by turning the seat a little one way then the other.

NOTE
If after inserting the seat it is not possible to turn the seat or to pull the seatlock, the seat is not properly locked.

Fitting the seat

13.0 Cleaning

NOTE

- Only use mild detergents without scouring agents to clean any surfaces.
- Please observe instructions for use on the detergents to avoid damage to the component surfaces.
- Do not use any sharp-edged tools such as knives, metal scrapers or aggressive solvents for cleaning.
- Do not use high-pressure cleaners to clean the scooters.
- Never direct water spray onto the fittings on the tiller or drive unit components.

Light soiling or dust is best removed using soft cloths.

Heavy soiling can best be removed with damp cloths and slightly soapy water.
Use a dry cloth to dry the scooter off after cleaning!

All lacquered surfaces can be cleaned and preserved using car polish.

14.0 Maintenance and Inspection

If you find any faults on your scooter during maintenance which are not covered by the repair information, please contact your dealer.
Always remove faulty scooters from operation and secure them against unauthorized use (remove key).

14.1 Daily maintenance before start of journey

Check the brakes by driving slowly and then braking.

Make a visual check of wheels and tyres for damage.

14.2 Annual inspection - inspection timetable

Take your scooter once per year to your dealer for an inspection. He will have the necessary tools and experience to service your scooter correctly.

Description (Component / inspection for)		**Assessment** OK	Defective
Component : Seat			
Seatbelt /	no damage fixed securely can be easily adjusted closed securely		
Armrest padding /	no damage fixed securely		
Armrest, folding mechanism /	no play in joint functions easily		
Armrests, width adjustment /	no damage functions easily		
Backrest upholstery /	no damage fixed securely		
Backrest adjustment /	no play in joint functions easily		
Seat upholstery /	no damage fixed securely		
Seat and back frames /	no damage		
Seat support - chassis connection /	no damage, no play in connection		

Description (Component / inspection for)		Assessment OK	Defective
Component : Tiller			
Panelling /	no damage fixed securely		
Grip rubbers /	no damage fixed securely		
Tiller, folding mechanism /	no play in joint functions easily		
Component : chassis			
Panelling /	no damage		
Reflectors /	no damage		
Frames /	no damage no corrosion		
Connection between chassis and drive unit /	Locking device engages securely Unlocking mechanics runs freely		
Steering mechanism /	no damage no play in joint functions easily		
Wheels /	no damage fixed securely		
Tyres /	no damage		
Antitipper wheels /	no damage rollers turn easily		

Description (Component / inspection for)		Assessment OK	Defective
Component : Displays and controls, electric system, electronic system			
Drive lever/	No damage Easy functioning over the entire lever movement Returns to central position after releasing from any position Secure blockage of magnetic brakes when lever is in central position (FOR U can not be pushed)		
Dashboard switches /	no damage safe function		
Dashboard displays /	no damage safe function		
Indicator lamps /	no damage safe function		
Charger jack socket /	no damage		
Batteries /	no damage fixed securely		
Check battery voltage (12-14 Volt per battery)			
Check battery capacity			
Control unit /	no damage fixed securely		
Cables and connecting plugs /	no damage fixed securely		

Description (Component / inspection for)		Assessment OK	Defective
Component : Drive			
Motor, drive /	no damage fixed securely drive noise		
Motor, magnetic brake /	holding force OK (FOR U can not be pushed with engaging lever in drive-position)		
Engaging lever /	no damage functions easily lever engaged (lever remains engaged)		

15.0 Troubleshooting

15.1 Before troubleshooting

Before you start troubleshooting, please observe the following points to avoid simple error sources.

Switch the FOR U off.

Ensure that the battery case (1) is firmly inserted in the chassis.

Switch the FOR U on after waiting about 1 minute.

If the error should occur again, you can find information about troubleshooting and appropriate remedies in the lists in sections 15.2 and 15.3.

15.2 Troubleshooting

Fault	Cause	Remedy
Scooter does not run / no display at the dashboard	Scooter not switched on	Switch the scooter on (chapter 7.4)
	Power supply interrupted	Battery not pluged in
		Check the battery fuses (chapter 16.8)
		Check fuse in power supply to tiller head (chapter 16.8)
	Batteries discharged	Charge the batteries (chapter 10.0)
	Batteries defective	Replace batteries (dealer)
Scooter does not run	Check battery charge display (battery discharged).	Charge the batteries (chapter 10.0)
	FOR U switched to push mode	Switch to drive mode (chapter 8.0)
	Drive lever lever pressed	Release drive
	Fault on drive lever	Visit your dealer
	Automatic switch-off (overload protection) active	Switch the electromobile off and switch it on again a few seconds later.
	Operation indicator blinking	Check blink code (chapter 15.3)

Fault	Cause	Remedy
Main fuses blow frequently	Batteries defective	Visit your dealer
	Motor defective	
	Fault in control unit	
	Short-circuit in electrical equipment	
Battery charge display moves rapidly to discharged during journey	Batteries discharged	Charge the batteries (chapter 10.0)
Motor jerks during driving	Batteries defective	Visit your dealer
	Motor defective	
Batteries do not charge	Defective fuse in power supply to tiller head	Visit your dealer
	Defective fuse in battery cable	Visit your dealer
	Battery charger defective	Visit your dealer
	Batteries completely discharged	

15.3 Operation indicator blink codes

The operation indicator (1) on the dashboard is also designed as a display for error messages.
Various faults in the drive electronics are displayed using blink sequence is as listed in Chapter 15.3.2.

15.3.1 Blink

Operation indicator (fault display) ...		
... blinking slowly	Battery voltage too low	Finish your journey as soon as possible and charge the batteries
... blinking every 5 seconds	Auto switch-off active (Chapter 11.3)	Switch the FOR U off and then on again
... blinking quickly		Ascertain fault using blink sequence (Chapter 15.3.2)

15.3.2 Error message blink sequences

1 x blink	Discharged battery	Charge the batteries (Chapt.10.0)
	Weak power supply from the battery	Check battery connection to chassis (Chapt. 12.4.4)
		Check battery terminals for tight fit (Chapt. 16.9.2)

Blink codes	Cause	Remedy
2 x blink	Bad connection to drive motor	Have the control unit connecting plugs checked (specialist dealer)
	Bad connection of the 4-pol contact between chassis an drive unit	Clean the contacts
	Drive motor carbon brushes worn	Visit your dealer
3 x blink	Motor cable short-circuited to battery terminal	Visit your dealer
4 x blink		Not in use
5 x blink		Not in use
6 x blink	Control unit switched off	Battery charger connected - remove battery charger (Chapt. 10.3)
7 x blink	Drive lever pressed down while switching on	Switch off the Scooter, release the drive lever and switch on again
8 x blink	Fault in control unit	Have all cable connections checked (specialist dealer).
9 x blink	Bad connection to motor brake	Have all cable connections checked (specialist dealer).
	Bad connection of the 4-pol contact between chassis an drive unit	Clean the contacts
	Electromobile switched to push mode	Switch to drive mode (chapter 8.0)
10 x blink	Electrical overload in control unit - bad power supply from battery.	Check battery connection to chassis (Chapt. 12.4.4)
		Check battery terminals for tight fit (Chapt. 16.9.2)

16.0 Repairs

The following repair information should enable you to carry out small repairs on your vehicle yourself. You should, however, only carry out such work if you are used to working with the tools described here since it is impossible to fully prevent injury hazards when handling tools. If you are not sure, you should try to get help from a second person if possible or contact your dealer.
In order to guarantee that all nuts and fixing screws are fitted tightly after repairs, you should ensure that these are tightened using the torque specified. You will find a list with the relevant torques in the Appendix.

16.1 Information about safety at work

Clamping and crushing hazard!

Pay particular attention to hazards caused by clamping and crushing while carrying out any repair work. This applies particularly to all rotating and adjustable parts of the scooter such as around the steering wheels.

The FOR U must be lifted in order to carry out certain work such as removing the wheels.

Before you lift the FOR U, make sure you prevent it rolling away by wedging it securely.

Make sure the vehicle cannot fall down when raised by using suitable supports such as wooden blocks.

Always place the blocks under metal components such as frames, drive units.
Do not support the FOR U by the plastic panelling!

16.2 Tools

The following tools are necessary to carry out the repairs described:

1 x socket spanner, size 10 mm
1 x socket spanner, size 12 mm
2 x ring spanner; size 14 mm
1 x ring spanner; size 14 mm
1 x ring spanner; size 17 mm
1 x screwdriver
1 x screwdriver; Phillips head No. 2

16.3 Front wheel - removal and replacement - 3-wheel version

Tools required:
1 x ring spanner, size 14 mm
1 x ring spanner, size 17 mm

Removing the front wheel:

Secure the FOR U against rolling away.

Lift the front end of the FOR U and support it (see chapter 17.0).

Remove the wheel fixing protective cap (1) with a screwdriver.

Hold the axle (2) with a ring spanner (size 14 mm) and remove the self-locking nut (3; size 17 mm).

Pull the axle out of the steering fork and the wheel.

Remove the wheel and spacer bushes from the steering fork.

Front wheel

Replacing the front wheel:

Place the wheel and spacer bushes (4+5) in the steering fork.

Push the axle (2) into the steering fork and the wheel.

Screw the axle self-locking nut (3) and tighten it (size 17 mm). While doing this, prevent the axle from turning using a second ring spanner (size 14 mm).

Lower the FOR U.

Press the protective cap (1) onto the wheel fixing nut.

Fitting the front wheel

16.4 Front wheel - removal and replacement - 4-wheel version

Tools required:
Front wheel: 1 x socket spanner, size 10 mm

Removing the front wheel:

Loosen the fixing screw (1) for the wheel fastening (size 10 mm).

Secure the FOR U against rolling away.

Lift the FOR U and support it (see chapter 17.0).

Remove the fixing screw for the wheel fastening.

Pull the wheel off the stem.

NOTE
Do not use force to remove the wheels from the axles.
Your specialist dealer has the necessary special tools.

Front wheel

Fitting the front wheel:

Push the wheel onto the stem (2) as far as the wheel stop.

Fitting the front wheel

Provide the fixing bolt with a washer (3), screw in and tighten.

NOTE
Observe alignment of washer!
Chamfered edge (a) must face the wheel.

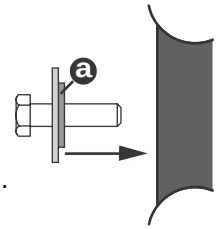

Securing the rear wheel

Lower the FOR U.

Retighten the fixing bolt.

16.5 Rear wheels - removal and replacement

Tools required:
1 x socket spanner, size 12 mm

Removing the rear wheel:

Loosen the fixing screw (1) for the wheel fastening (size 12 mm).

Secure the Strider against rolling away.

Lift the FOR U and support it (see chapter 17.0).

Remove the fixing screw for the wheel fastening.

Pull the wheel off the stem.

Rear wheel

NOTE
Do not use force to remove the wheels from the axles.
Your specialist dealer has the necessary special tools.

Fitting the rear wheel:

Place the key (2) in the slot in the drive shaft (3).

NOTE
The key is rectangular. Place it with its widest side in the axle slot.

Locating the axle key

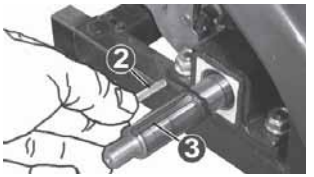

Push the wheel onto the stem and align the wheel hub groove (4) with the key in the drive shaft.

Push the wheel on as far as the drive shaft stop.

Fitting the rear wheel

Securing the rear wheel

Provide the fixing bolt with a washer (5), screw in and tighten.

Lower the FOR U.

Retighten the fixing bolt.

16.6 Replacing the tyre

Remove the damaged wheel.

components of the FOR U wheel

Dismantling the wheel rims:

Loosen the three nuts (1) with a socket spanner (size 12 mm) and remove together with the lock washers (2).

Separate the wheel hub (3) from the wheel rim.

Remove the inner wheel rim (4) from the tyre.

Remove the outer wheel rim (5) from the tyre.

Reassembly:

Place the outer rim (5) in the tyre.

Place the inner rim (4) in the tyre and align the fixing holes.

Place the wheel hub (3) in the inner wheel rim.

Locate the lock washer (2), screw on the nuts (1) and tighten evenly.

16.7 Adjusting lock counterstop

Separate chassis and drive unit (Chapter 12.3).

Release locknut (1) on stop bolt (2).

Adjust the lock counterstop:
(a) Unscrew the stop bolt until the locking device no longer engages.

(b) Screw the stop bolt back in in stages until the locking device engages again.

Adjusting lock counterstop

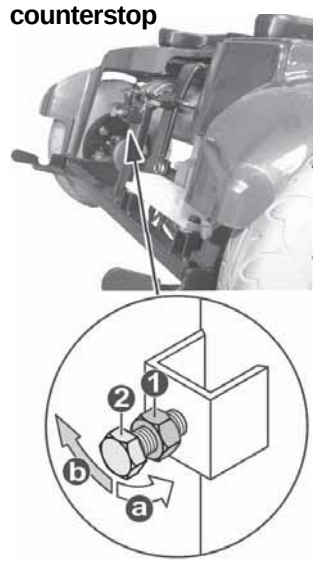

NOTE
Check the locking device function by connecting chassis and drive unit during adjustment several times.

Fix the stop bolt by tightening the locknut.

Connect the chassis and drive unit (Chapter 12.4).

Re-check the locking device.

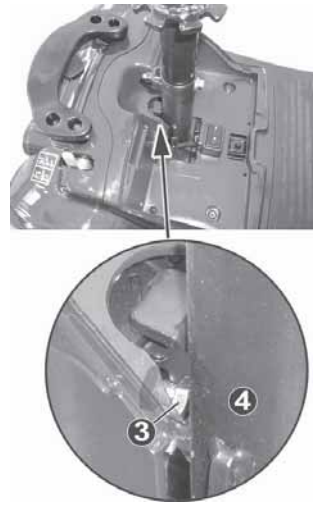

NOTE
When the adjustment has been properly made, the lock counterstop (3) contacts the seating tube (4).

16.8 Fuses

Wiring diagram

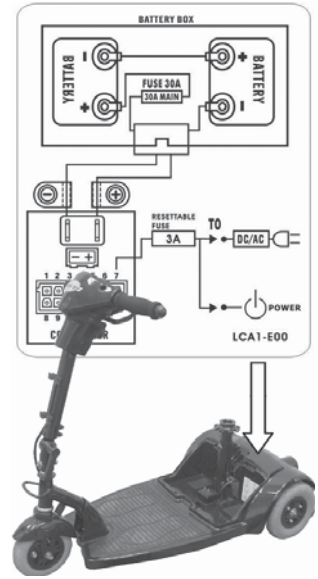

The FOR U is fitted with the following fuses.

- 3 A resetable fuse=
  power supply to tiller head and charging socket

Battery fuse

- 30 A fusible fuse = in battery positive cable (1).

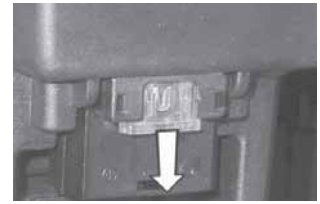

To replace Fuse:

Pull out fuse and replace it.

16.9 Batteries

Only replace the batteries with the following battery types:

12 V / 12 Ah, lead acid deep cycle batteries.

You may **not** use wet cell batteries with detachable cover caps.

Risk of accidents!
- Refitting the battery may only be carried out by your dealer.

16.9.1 Disposal of used or damaged batteries

Caution acid!
- Observe safety information in chapter 1.6!

BATTERIES ARE HAZARDOUS WASTE!!
Used and defective batteries must be properly disposed of and only handed over to the correct disposal points.

Please give used or damaged batteries back to your dealer. He will ensure that they are properly disposed of.

Handling damaged batteries:

When handling damaged batteries or objects which have been soiled with acid, you must always wear:
- protective goggles
- acid-proof gloves
- respiratory protection

Always wash soiled objects and tools with plenty of water.

Transporting damaged batteries:

Always wear protective goggles and acid-proof gloves.

Always transport and store batteries in an acid-proof container.

16.9.2 Replacing the batteries

Fire and burn hazard if battery terminal is short-circuited!

- Never touch the positive and negative battery terminals simultaneously with metal parts (short-circuiting).

Remove the battery case from the FOR U as described in chapter 12.3.3.

Remove all four fixing bolts (1) on the bottom of the battery case.

Put the battery case down on its bottom side and open it.

Opening the battery case

Removing the batteries, to do this:

1. **First** remove the cable from the battery **negative terminal**.
2. **Then** remove the cable from the battery **positive terminal**.

Loosening the battery cable

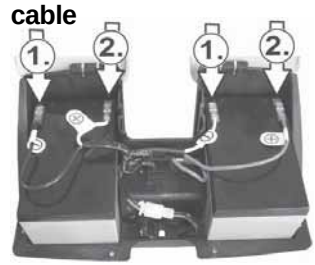

Insert the battery and **connect** the battery cables in reverse order:

1. **First** connect the cable to the battery **positive terminal**.
2. **Then** connect the cable to the battery **negative terminal**.

Close the battery case, screw in all the battery fixing screws and tighten.

Connecting the battery cable

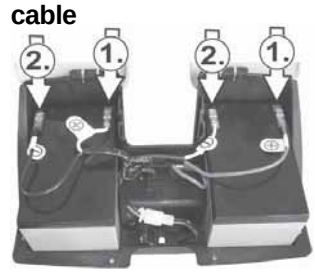

17.0 Temporary storage

If you are not intending to use your FOR U for longer periods (e.g. over the winter, you should prepare it as follows:

Remove soiling and dust.

Charge the batteries completely.

Place the FOR U on supports. Lift the FOR U high enough so that the tyres are no longer touching the floor.

Care during storage:

Recharge the batteries once a month (see chapter 10.0).

Front support - 3 wheel

Front support - 4 wheel

Rear support

18.0 Appendix

18.1 Nameplate

The nameplate is located on the seat attachment and contains the following information:

- Model number
- Date manufacture (month/year)
- Manufacturer
- Serial number
- Maximum speed
- User weight

Nameplate

18.2 Specifications

18.2.1 General data

FOR U application class ..... internal and external use (Class B)

Version ..... 3 or 4-wheel version

Turning radius ..... 75.5 cm / 3S
..... 111 cm / 4S

Speed ..... 6.4 kph (4 mph)

Maximum range* ..... approx. 8 Miles

Maximum climable incline ..... 6° / 3S
..... 8° / 4S

Maximum climable obstacle ..... 50 mm

Total weight (ready for driving incl. batteries) 40.8 kg / 3S
..... 42.8 kg / 4S

weight heaviest part ..... 12.5 kg / 3S
..... 14.5 kg / 4S

Maximum working load (user weight) ..... 115 kg (18 stone)

Tyre size, front ..... 7 x 1 3/4 / 3S
..... 200 x 50 / 4S
rear ..... 200 x 50

Working voltage (battery voltage) ..... 24 Volt

Batteries ..... see chapter 16.9

Storage temperature ..... - 40°C to + 65°C

Ambient temperature ..... - 25°C to + 50°C

* Theoretical range is calculated under test conditions in accordance with European standards.
Actual range in normal use will depend on many factors, including the condition of the vehicle and its batteries, the weight of the driver, correct tyre pressure, ambient temperature, and the gradient and surface of the road or pavement.

18.2.2 Dimensions 3-wheel version

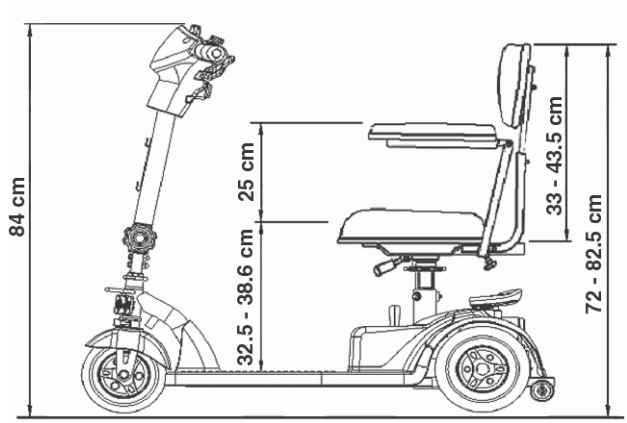

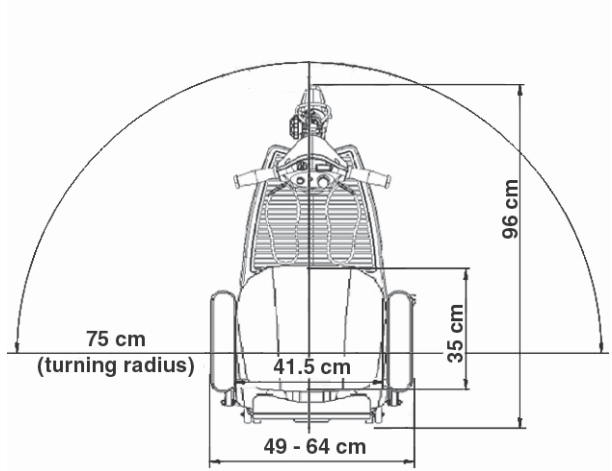

18.2.3 Dimensions 4-wheel version

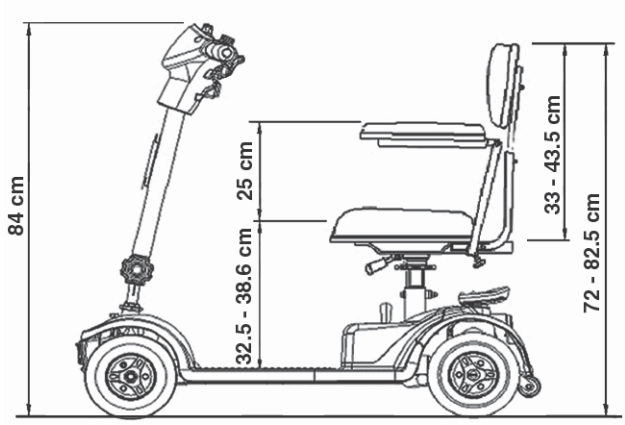

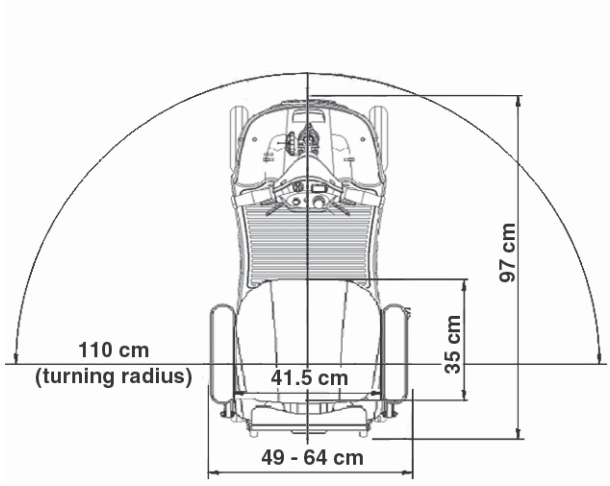

18.3 Torque for fixing screws

General torque for nuts and bolts:

M5	= 4.5 to 6 Nm	M10	= 30 to 40 Nm
M6	= 8 to 12 Nm	M12	= 50 to 60 Nm
M8	= 18 to 25 Nm		

18.4 Disposing of the scooter

To comply with national law, the following instructions are guidelines for the disposal of your product at the end of its life or when it ceases to function economically.
Recent legislation on electrical equipment indicates that the equipment must be disposed of in a proper manner.

- The product and /or its components are not to enter the system of landfill sites.
- The product and /or its components are not to be disposed of in domestic household waste.
- The electrical and material parts are to be disposed of as scrap or recycling materials.
- Local waste collection depots are available to advice and dispose of electrical products.
- Batteries which contain liquid acid must be stored and disposed of separately at these depots.
- Please enquire about disposal depots with your local authority.
- Should you require further advice, please contact your supplier or nearest dealer.

19.0 Warranty information

The FOR U Model 3S and 4S scooters carry a 12 months warranty from date of purchase.

Important!

- During the warranty period any parts that have become defective due to faulty workmanship or material will be repaired or replaced without charge by KYMCO supplier / dealer.
- The warranty excludes tyres and all items that have been subject to undue wear and items subjected to misuse.
- Unauthorized changes or modifications will forfeit your warranty.
- If a defect or fault is discovered, KUMCO supplier / dealer from whom the scooter was purchased should be notified immediately.

Limitation of liability

The warranty does not extend to the consequential costs resulting from fault clearence, in particular freight and travel costs, loss of earnings, expenses, etc.

The manufacturer will not accept responsibility for any damage or injury caused by misuse or non-observance of the instructions set out in this user manual.

20.0 Annual inspections carried

Date:_____ Dealer´s stamp (Signature)	**Date:**_____ Dealer´s stamp (Signature)
Date:_____ Dealer´s stamp (Signature)	**Date:**_____ Dealer´s stamp (Signature)
Date:_____ Dealer´s stamp (Signature)	**Date:**_____ Dealer´s stamp (Signature)
Date:_____ Dealer´s stamp (Signature)	**Date:**_____ Dealer´s stamp (Signature)

(Dealer´s stamp)

KWANG YANG MOTOR CO., LTD

No.35 Wan Hsing Street,San Min Distrist

Kaohsiung Taiwan, Republic of PROC

Telephone:886-7-3822526

FAX : 886-7-3950021