Katydid Stove
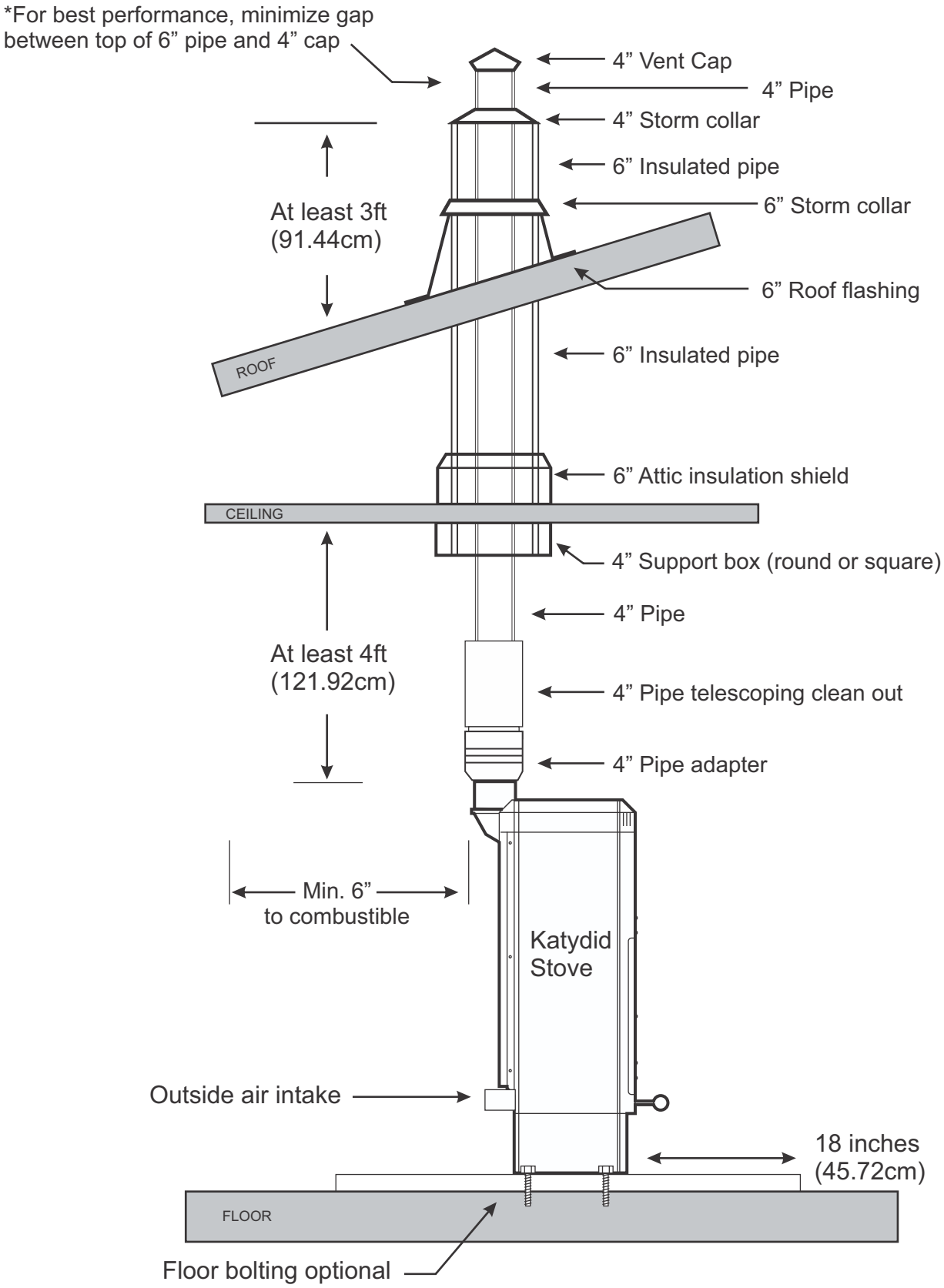
Single story with attic Installation
Not to scale