Katydid Stove

Cathedral Installation
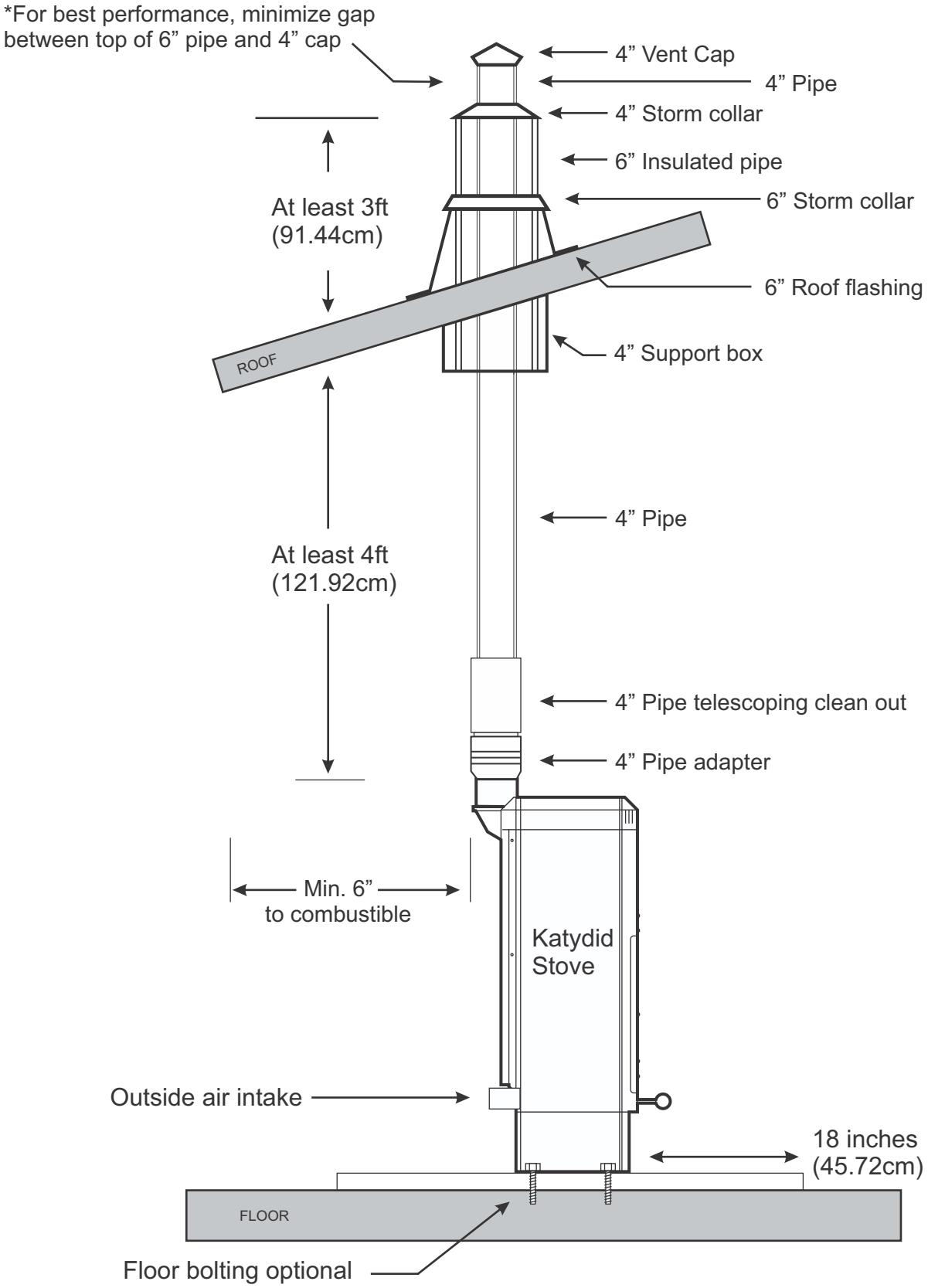
Not to scale