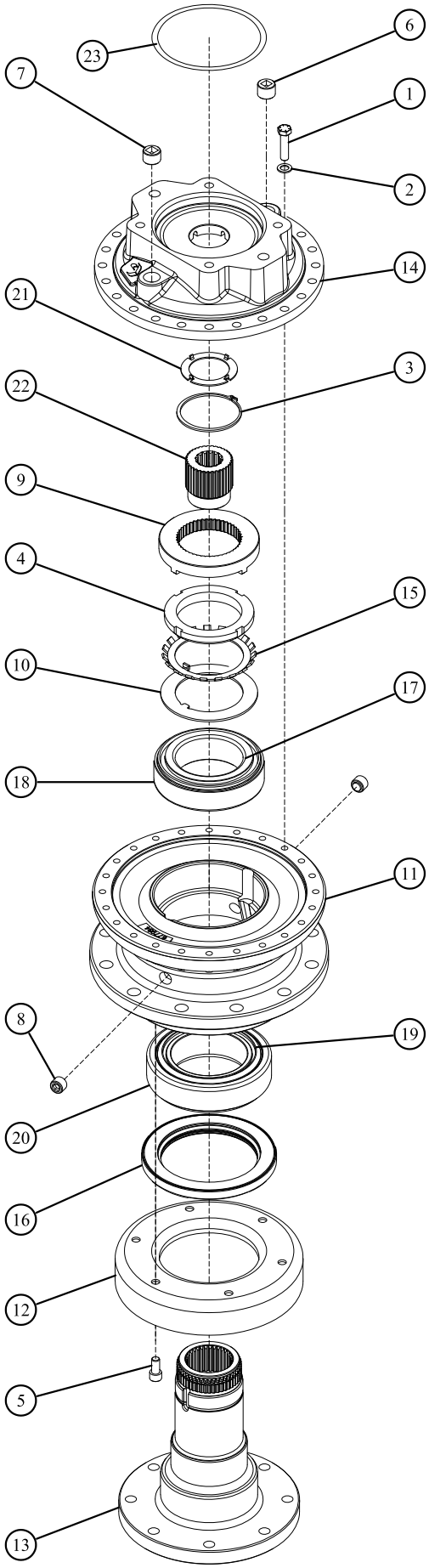REF#	PARTS DESCRIPTION	REQ	PART #
1	BOLT-HEX HEAD	24	11-1611
2	WASHER-FLAT	24	11-1612
3	RING-RETAINING	1	11-1613
4	NUT-LOCK	1	11-1614
5	SCREW-SKT HD CAP	6	11-1616
6	PLUG (TO COVER) (MAGNETIC)	1	35-0200
7	PLUG (TO COVER) (NON-MAGNETIC)	1	35-0202
8	PIPE PLUG (TO HUB) (MAGNETIC)	2	21-1611
9	PLATE-KEEPER	1	35-0098
10	WASHER-THRUST (BOTTOM)	1	35-0099
11	HUB	1	35-0100
12	GUARD	1	35-0102
13	SHAFT-OUTPUT	1	35-0103
14	**COVER**		
	C COVER (STANDARD)	1	35-0199
	D COVER (OPTIONAL)	1	35-0109
	SEAL KIT		**33-0078**
15	WASHER-LOCK	1	
16	SEAL-OIL	1	
	SEALANT		
	BEARING AND SEAL KIT		**33-0079**
17	BEARING-CONE (TOP)	1	
18	BEARING-CUP (TOP)	1	
19	BEARING-CONE (BOTTOM)	1	
20	BEARING-CUP (BOTTOM)	1	
15	WASHER-LOCK	1	
16	OIL SEAL	1	
	SEALANT	1	
	D3 SPINDLE REPLACEMENT INSERT KIT		**33-0080**
21	WASHER-THRUST (TOP)	1	
22	COUPLING	1	
	SEALANT		
23	O-RING, D3 SPINDLE	1	24-0305