- **Port size: 1/8 ... 1/2” (ISO G)**
- **Predefined options provide ease of ordering**
- **Flexible configurations**
- **Integrated gauge reduces mounting time**
- **Push to lock adjusting knob**

Technical features

Medium:
Compress air only,
filtered to better than 40 µm
Maximum operating pressure:
10 bar (145 psi)
Pressure range:
0,5 … 8,5 bar (7,25 ... 123 psi)
Flow:
51,7 l/s max., at port size 1/2”, 10 bar inlet pressure, pressure set at 6,3 bar and 1 bar pressure drop from set.

Filter element:
5 µm
Port size:
G1/8, G1/4, G3/8, G1/2
Bowl capacity:
G1/8 & G1/4: 12 ml
G3/8 & G1/2: 45 ml
Drain type:
Manual, Semi automatic, Automatic

Ambient/Media temperature:
0 … +60°C (+32 ... +140°F)
Air supply must be dry enough to avoid ice formation at temperatures below +2°C (+35°F).

Materials:
G1/8 & G1/4 Body: Polyamide
G3/8 & G1/2 Body: Die casting Aluminum
Bowl: Transparent PC
Bowl cover: Polyamide
Bonnet: Polyamide
Elastomers: Nitrile
Main valve: Brass

Technical data - standard models

Symbol	Port size	Flow Rate (l/s)	Weight (kg)	Bowl	Model Automatic	Semi automatic	Manual
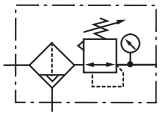	G1/8	10	0,20	Transparent without guard	-	B49G-1GK-ST1-RMG	B49G-1GK-MT1-RMG
	G1/4	15	0,20	Transparent without guard	-	B49G-2GK-ST1-RMG	B49G-2GK-MT1-RMG
	G3/8	25	0,64	Transparent with guard	B49G-3GK-AW1-RMG	B49G-3GK-SW1-RMG	B49G-3GK-MW1-RMG
	G1/2	50	0,64	Transparent with guard	B49G-4GK-AW1-RMG	B49G-4GK-SW1-RMG	B49G-4GK-MW1-RMG

Option selector

B49G-★★★-★★★-★★★

Port size	Substitute
1/8”	1
1/4”	2
3/8”	3
1/2”	4
Thread form	**Substitute**
ISO G	G
Adjustment	**Substitute**
Knob (Standard)	K

Gauge	Substitute
With (Standard)	G
Outlet Pressure adjustment range *1)	**Substitute**
0,5 … 8,5 bar	M
Diaphragm	**Substitute**
Relieving	R
Filter element	**Substitute**
5 µm (Standard)	1
Bowl	**Substitute**
Transparent without guard *2)	T
Transparent with guard *3)	W
Drain	**Substitute**
Semi automatic drain	S
Manual drain	M
Automatic drain *3)	A

1*) Outlet pressure can be adjusted in excess of and less than those specified. Do not use these units to control pressures outside of the specified ranges.

*2) For G1/8 & G1/4 only
*3) For G3/8 & G1/2 only

Flow characteristics

Element 5 µm
Port size 1/2”
Inlet pressure 10 bar

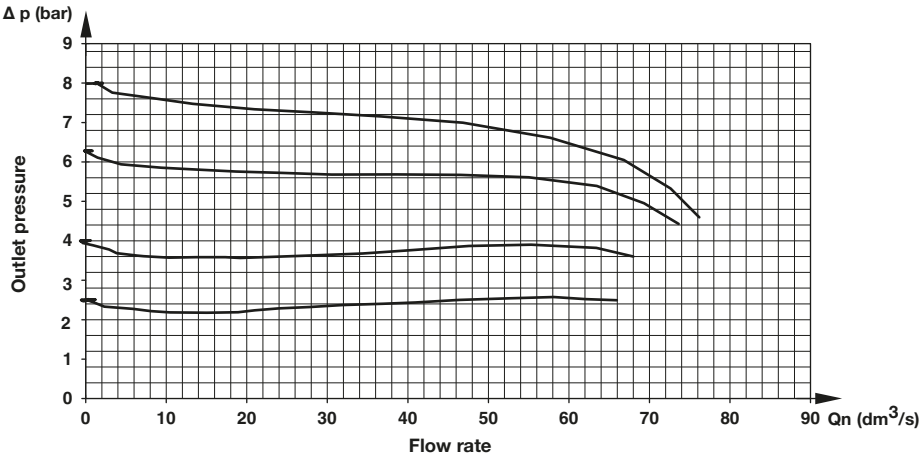

Accessories

	L Bracket	C Bracket	Gauge
			
Port size	**Page 4**	**Page 4**	**Page 4**
G1/8 & G1/4	49B-011	49B-021	49B-GS01
G3/8 & G1/2	49B-012	49B-022	49B-GS02

Dimensions

Dimensions in mm
Projection/Third angle

G1/8 & G1/4

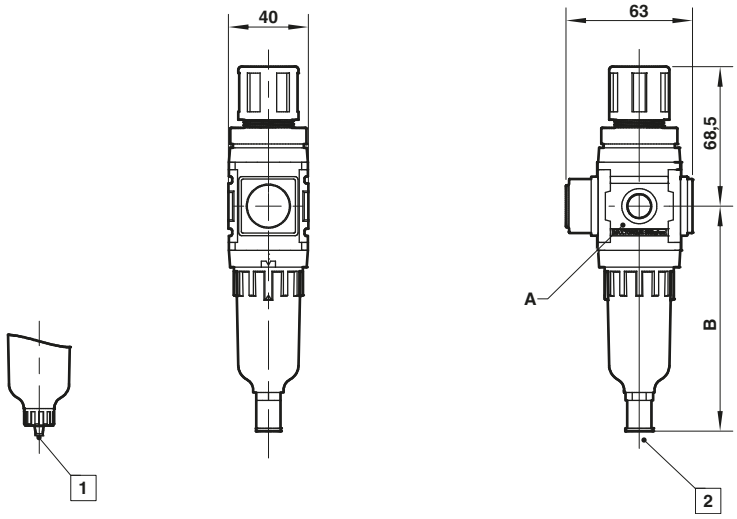

1 Manual drain can insert ID ø 4 PU tube at drain outlet.
2 Semi-auto drain can insert OD ø 6 PU tube at drain outlet.

G3/8 & G1/2

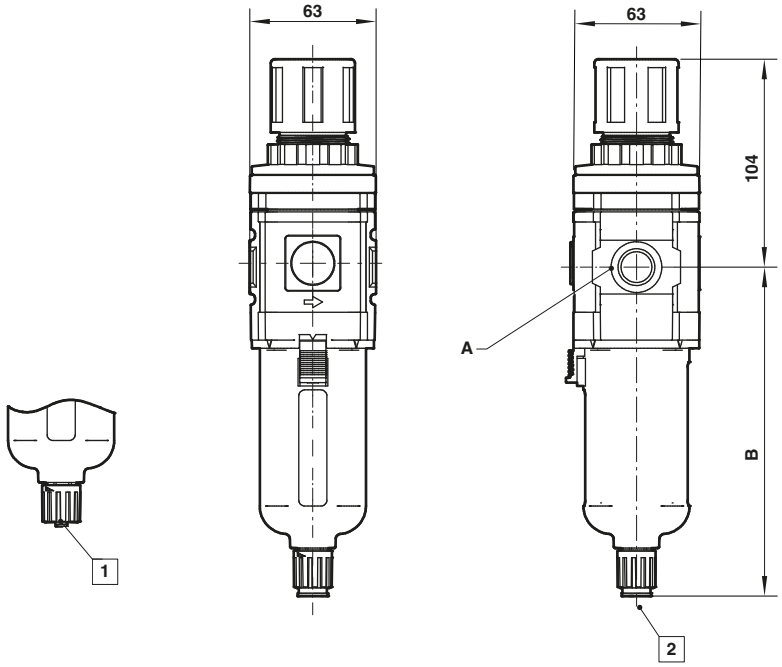

1 Manual drain or automatic drain can insert ID ø 5,5 PU tube at drain outlet.
2 Semi-auto drain can insert OD ø 8 PU tube at drain outlet.

Port size (A)	B	Model
G1/8	113,5	B49G-1GK-ST1-RMG
G1/8	105,5	B49G-1GK-MT1-RMG
G1/4	113,5	B49G-2GK-ST1-RMG
G1/4	105,5	B49G-2GK-MT1-RMG
G3/8	158	B49G-3GK-SW1-RMG
G3/8	157	B49G-3GK-MW1-RMG
G3/8	157	B49G-3GK-AW1-RMG
G1/2	158	B49G-4GK-SW1-RMG
G1/2	157	B49G-4GK-MW1-RMG
G1/2	157	B49G-4GK-AW1-RMG

Accessories

Dimensions in mm
Projection/Third angle

L Bracket
49B-011

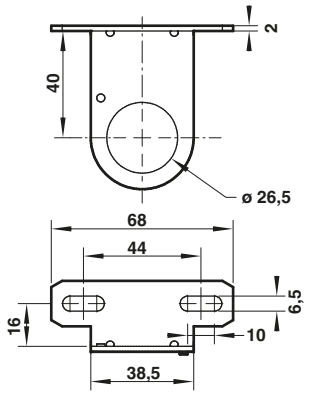

L Bracket
49B-012

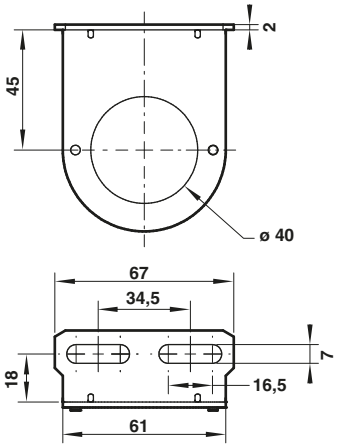

C Bracket
49B-021

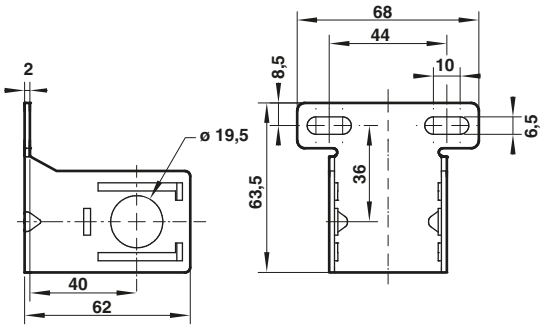

C Bracket
49B-022

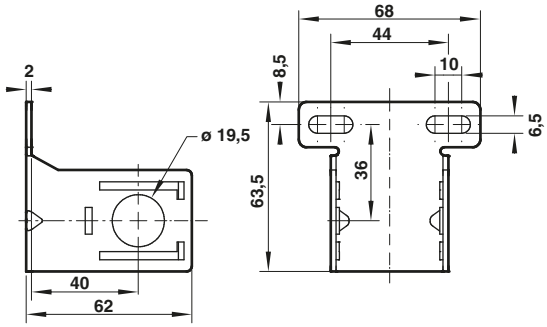

Gauge
49B-GS01

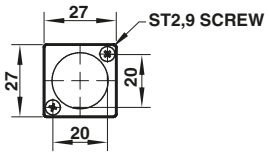

Gauge
49B-GS02

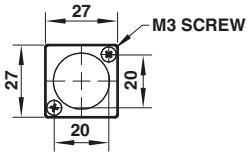

Warning

These products are intended for use in industrial compressed air systems only. Do not use these products where pressures and temperatures can exceed those listed under »**Technical features/data**«.
Before using these products with fluids other than those specified, for non-industrial applications, life-support systems or other applications not within published specifications, consult
IMI Precision Engineering, Norgren Co. Ltd.

Through misuse, age, or malfunction, components used in fluid power systems can fail in various modes. The system designer is warned to consider the failure modes of all component parts used in fluid power systems and to provide adequate safeguards to prevent personal injury or damage to equipment in the event of such failure.
System designers must provide a warning to end users in the system instructional manual if protection against a failure mode cannot be adequately provided.
System designers and end users are cautioned to review specific warnings found in instruction sheets packed and shipped with these products.