User Manual

Off Grid Solar Inverter

SPF 3500 ES

SPF 5000 ES

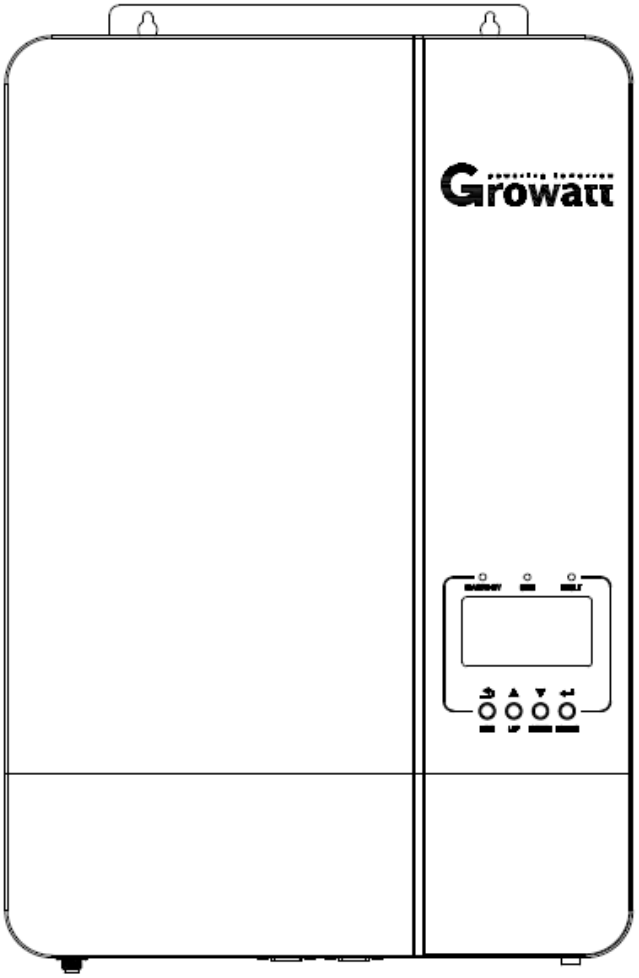

Version: 2.0

Table Of Contents

Information on this Manual

Validity

This manual is valid for the following devices:

- SPF 3500 ES
- SPF 5000 ES

Scope

This manual describes the assembly, installation, operation and troubleshooting of this unit. Please read this manual carefully before installations and operations.

Target Group

This document is intended for qualified persons and end users. Tasks that do not require any particular qualification can also be performed by end users. Qualified persons must have the following skills:

- Knowledge of how an inverter works and is operated
- Training in how to deal with the dangers and risks associated with installing and using electrical devices and installations
- Training in the installation and commissioning of electrical devices and installations
- Knowledge of the applicable standards and directives
- Knowledge of and compliance with this document and all safety information

Safety Instructions

⚠ **WARNING: This chapter contains important safety and operating instructions. Read and keep this manual for future reference.**

1. Please be clear which kind of battery system you want, lithium battery system or lead-acid battery system, if you choose the wrong system, energy storage system can't work normally.
2. Before using the unit, read all instructions and cautionary marking on the unit, the batteries and all appropriate sections of this manual. The company has the right not to quality assurance, if not according to the instructions of this manual for installation and cause equipment damage.
3. All the operation and connection please professional electrical or mechanical engineer.
4. All the electrical installation must comply with the local electrical safety standards.
5. When install PV modules in the daytime, installer should cover the PV modules by opaque materials, otherwise it will be dangerous as high terminal voltage of modules in the sunshine.
6. **CAUTION-**To reduce risk of injury, charge only deep-cycle lead-acid type rechargeable batteries and lithium batteries. Other types of batteries may burst, causing personal injury and damage.
7. Do not disassemble the unit. Take it to a qualified service center when service or repair is required. Incorrect re-assembly may result in a risk of electric shock or fire.
8. To reduce risk of electric shock, disconnect all wirings before attempting any maintenance or cleaning. Turning off the unit will not reduce this risk.
9. **NEVER** charge a frozen battery.
10. For optimum operation of this inverter, please follow required spec to select appropriate cable size. It's very important to correctly operate this inverter.
11. Be very cautious when working with metal tools on or around batteries. A potential risk exists to drop a tool to spark or short circuit batteries or other electrical parts and could cause an explosion.
12. Please strictly follow installation procedure when you want to disconnect AC or DC terminals. Please refer to INSTALLATION section of this manual for the details.
13. GROUNDING INSTRUCTIONS -This inverter should be connected to a permanent grounded wiring system. Be sure to comply with local requirements and regulation to install this inverter.
14. **NEVER** cause AC output and DC input short circuited. Do NOT connect to the mains when DC input short circuits.
15. Make sure the inverter is completely assembled, before the operation.

Introduction

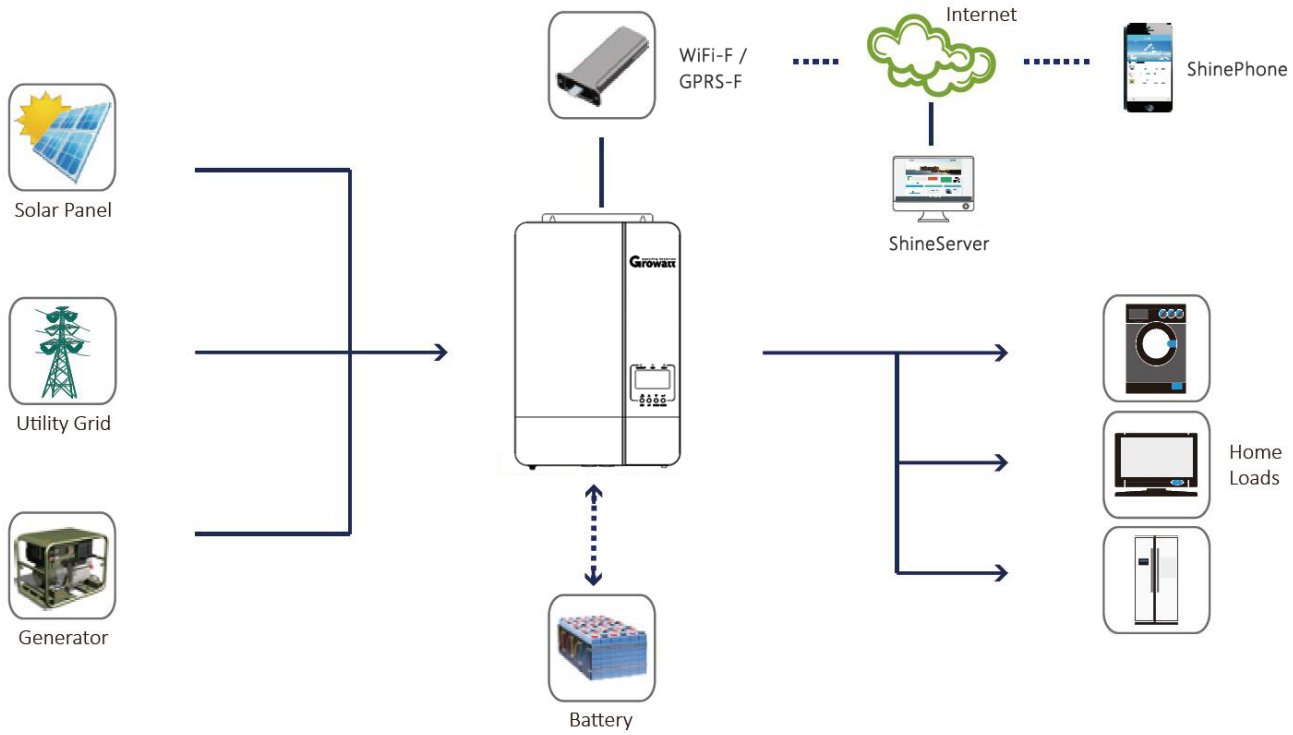

Hybrid Power System

This is a multifunctional off grid solar inverter, integrated with a MPPT solar charge controller, a high frequency pure sine wave inverter and a UPS function module in one machine, which is perfect for off grid backup power and self-consumption applications. This inverter can work with or without batteries.

The whole system also need other devices to achieve complete running such as PV modules, generator, or utility grid. Please consult with your system integrator for other possible system architectures depending on your requirements. The WiFi / GPRS module is a plug-and-play monitoring device to be installed on the inverter. With this device, users can monitor the status of the PV system from the mobile phone or from the website anytime anywhere.

Features

- Rated power 3.5KW to 5KW, power factor 1
- MPPT ranges 120V~430V, 450Voc
- High frequency inverter with small size and light weight
- Pure sine wave AC output
- Solar and utility grid can power loads at the same time
- With CAN/RS485 for BMS communication
- With the ability to work without battery
- Parallel operation up to 6 unit (only with battery connected)
- WIFI/ GPRS remote monitoring (optional)

Product Overview

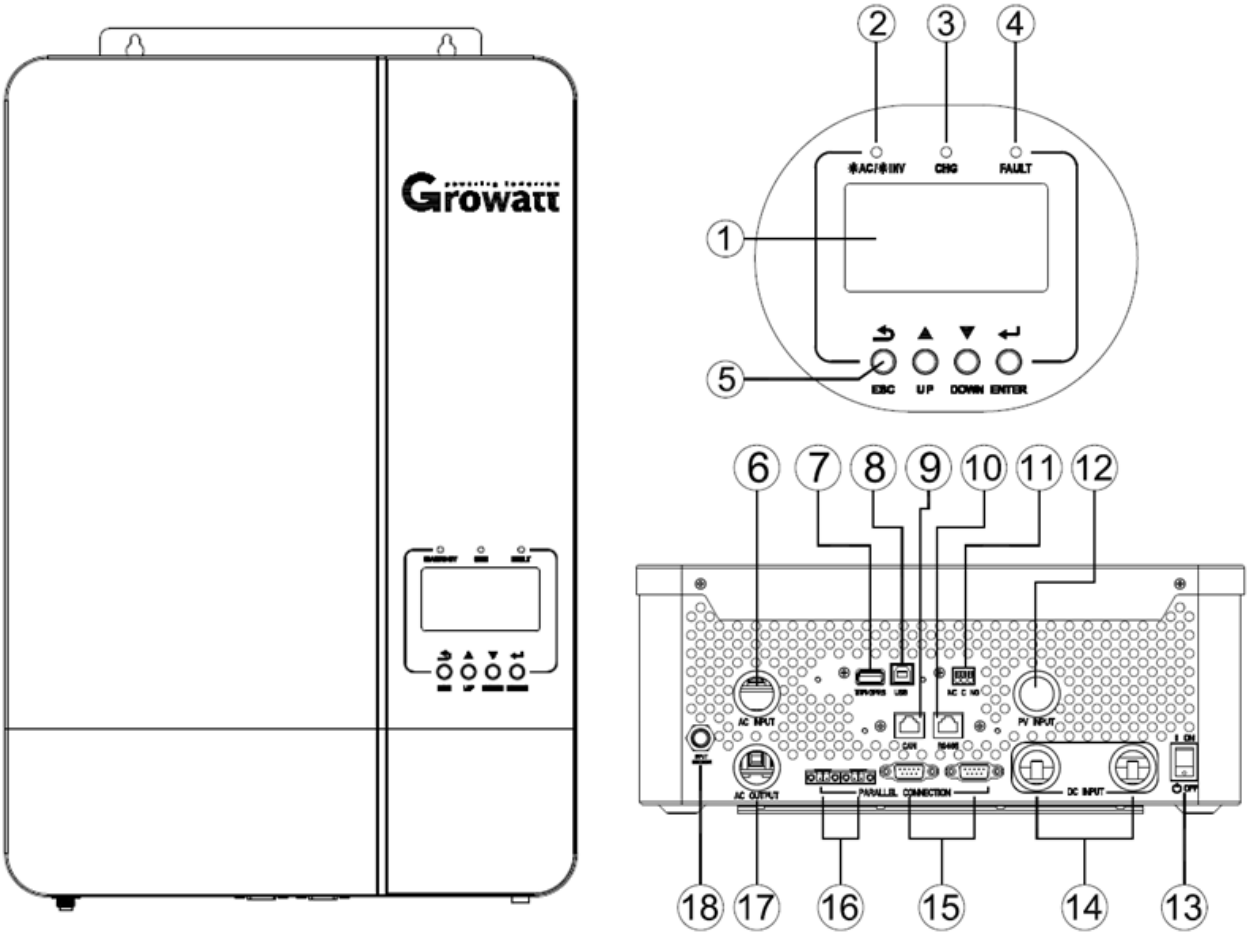

1. LCD display
2. Status indicator
3. Charging indicator
4. Fault indicator
5. Function buttons
6. AC input
7. WiFi/GPRS communication port
8. USB communication port
9. CAN communication Port
10. RS485 communication Port
11. Dry contact
12. PV input
13. Power on/off switch
14. Battery input
15. Parallel communication ports
16. Current sharing ports
17. AC output
18. Circuit breaker

Installation

Unpacking and Inspection

Before installation, please inspect the unit. Be sure that nothing inside the package is damaged. You should have received the following items in the package:

- The unit x 1
- User manual x 1
- Communication cable x 1
- Software CD x 1
- Current sharing cable x 1
- Parallel communication cable x 1

Preparation

Before connecting all wiring, please take off bottom cover by removing two screws as shown below.

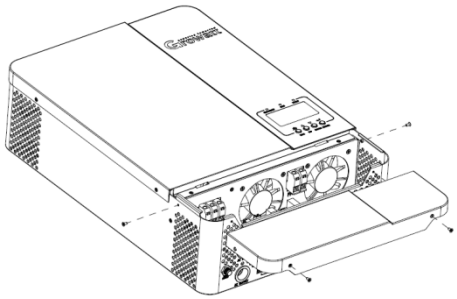

Mounting the Unit

Consider the following points before selecting where to install:

- Do not mount the inverter on flammable construction materials.
- Mount on a solid surface
- Install this inverter at eye level in order to allow the LCD display to be read at all times.
- The ambient temperature should be between 0°C and 55°C to ensure optimal operation.
- The recommended installation position is to be adhered to the wall vertically.
- Be sure to keep other objects and surfaces as shown in the right diagram to guarantee sufficient heat dissipation and to have enough space for removing wires.

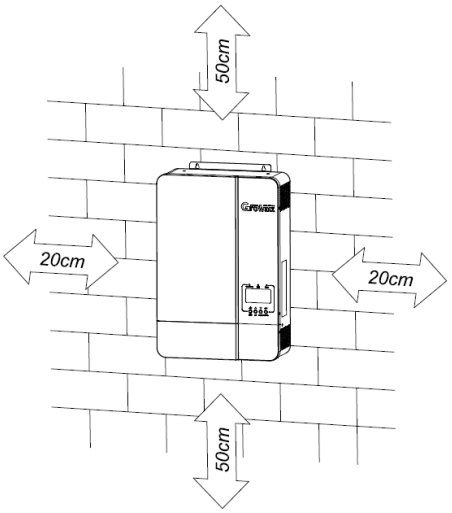

SUITABLE FOR MOUNTING ON CONCRETE OR OTHER NON-COMBUSTIBLE SURFACE ONLY.

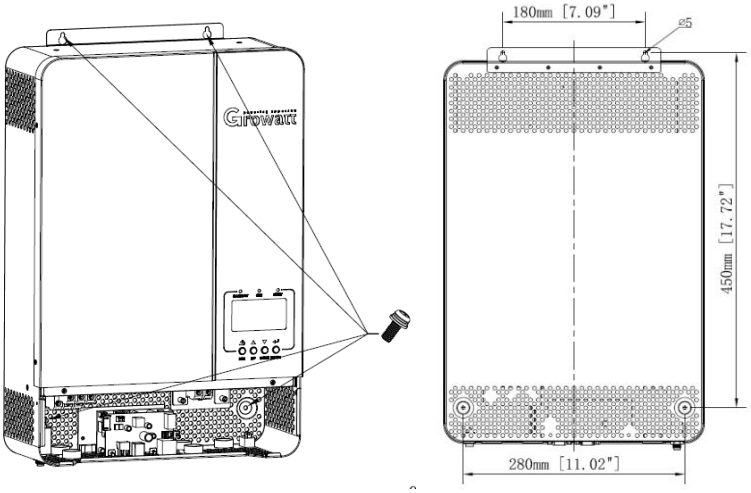

Install the unit by screwing three screws. It's recommended to use M4 or M5 screws.

Battery Connection

Lead-acid Battery Connection

User can choose proper capacity lead acid battery with a nominal voltage at 48V. Also, you need to choose battery type as "AGM(default) or FLD"

CAUTION: For safety operation and regulation compliance, it's requested to install a separate DC over-current protector or disconnect device between battery and inverter. It may not be requested to have a disconnect device in some applications, however, it's still requested to have over-current protection installed. Please refer to typical amperage in below table as required fuse or breaker size.

Ring terminal:

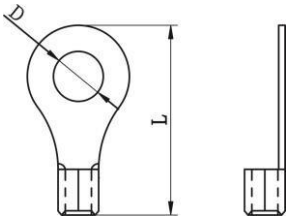

WARNING! All wiring must be performed by a qualified person.
WARNING! It's very important for system safety and efficient operation to use appropriate cable for battery connection. To reduce risk of injury, please use the proper recommended cable and terminal size as below.

Recommended battery cable and terminal size:

Model	Wire Size	Torque value
SPF 3500 ES	1 * 4 AWG	2-3 Nm
SPF 5000 ES	1 * 2 AWG	2-3 Nm

Note: For lead acid battery, the recommended charge current is 0.2C(C→battery capacity)

Please follow below steps to implement battery connection:

1. Assemble battery ring terminal based on recommended battery cable and terminal size.
2. Connect all battery packs as units requires. It's suggested to connect at least 200Ah capacity battery for SPF 3500 ES /SPF 5000 ES.
3. Insert the ring terminal of battery cable flatly into battery connector of inverter and make sure the bolts are tightened with torque of 2Nm. Make sure polarity at both the battery and the inverter/charge is correctly connected and ring terminals are tightly screwed to the battery terminals.

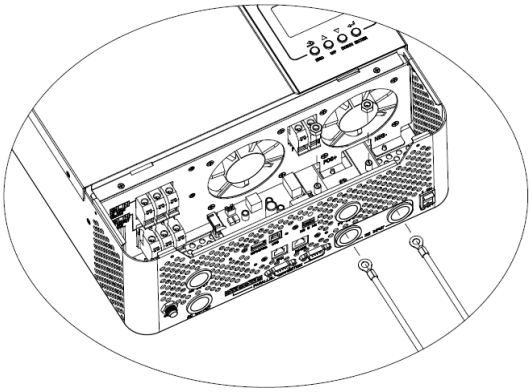

⚠	**WARNING: Shock Hazard** Installation must be performed with care due to high battery voltage in series.

⚠	**CAUTION!!** Do not place anything between the flat part of the inverter terminal and the ring terminal. Otherwise, overheating may occur. **CAUTION!!** Do not apply anti-oxidant substance on the terminals before terminals are connected tightly. **CAUTION!!** Before making the final DC connection or closing DC breaker/disconnector, be sure positive (+) must be connected to positive (+) and negative (-) must be connected to negative (-).

Lithium Battery Connection

If choosing lithium battery for SPF 3500 ES /SPF 5000 ES, you are allowed to use the lithium battery only which we have configured. There're two connectors on the lithium battery, RJ45 port of BMS and power cable.

Please follow below steps to implement lithium battery connection:
1. Assemble battery ring terminal based on recommended battery cable and terminal size (same as Lead acid, see section Lead-acid Battery connection for details) .

2. Insert the ring terminal of battery cable flatly into battery connector of inverter and make sure the bolts are tightened with torque of 2-3Nm. Make sure polarity at both the battery and the inverter/charge is correctly connected and ring terminals are tightly screwed to the battery terminals.

3. Connect the end of RJ45 of battery to BMS communication port(RS485 or CAN) of inverter.

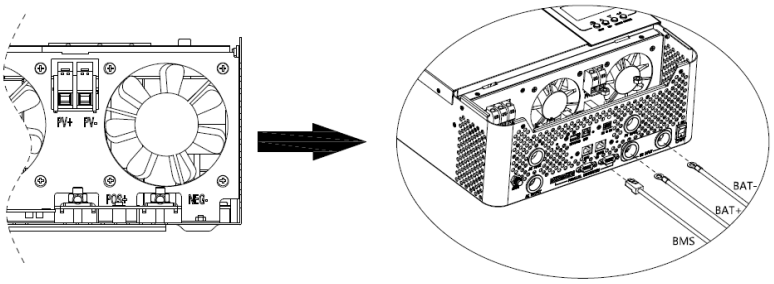

4. The other end of RJ45 insert to battery communication port(RS485 or CAN).

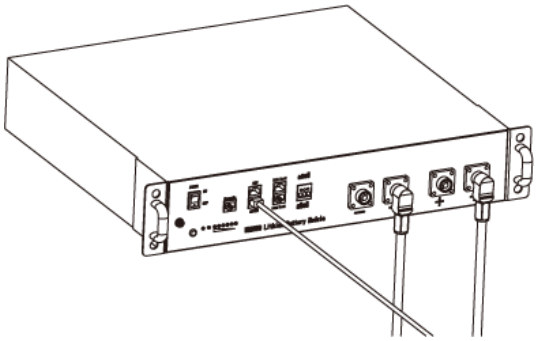

Note: If choosing lithium battery, make sure to connect the BMS communication cable between the battery and the inverter. You need to choose battery type as "lithium battery".

Lithium battery communication and setting

In order to communicate with battery BMS, you should set the battery type to "LI" in Program 5. Then the LCD will switch to Program 36, which is to set the protocol type. There are several protocols in the inverter. Please get instruction from Growatt to choose which protocol to match the BMS.

1. Connect the end of RJ45 of battery to BMS communication port of inverter

Make sure the lithium battery BMS port connects to the inverter is Pin to Pin, the inverter BMS port pin assignment shown as below:

Pin number	RS485 port	CAN port
1	RS485B	--
2	RS485A	--
3	--	--
4	--	CANH
5	--	CANL
6	--	--
7	--	--
8	--	--

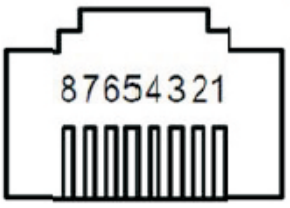

LCD setting

To connect battery BMS, need to set the battery type as "LI" in Program 05.
After set "LI" in Program 05, it will switch to Program 36 to choose communication protocol. You can choose RS485 communication protocol which is from L01 to L50, and you can also choose CAN communication protocol which is from L51 to L99.
Note: You can only use one communication type RS485 or CAN in a time.

05	Battery type	AGM (default) bAtt AGM 005
		Flooded bAtt FLd 005
		Lithium (only suitable when communicated with BMS) bAtt LI 005
		User-Defined bAtt USE 005 If "User-Defined" is selected, battery charge voltage and low DC cut-off voltage can be set up in program 19, 20 and 21.
		User-Defined 2（suitable when lithium battery without BMS communication） bAtt US2 005 If "User-Defined 2" is selected, battery charge voltage and low DC cut-off voltage can be set up in program 19, 20 and 21. It is recommended to set to the same voltage in program 19 and 20(full charging voltage point of lithium battery). The inverter will stop charging when the battery voltage reaches this setting.

36	RS485 Communication protocol	Protocol 1	PtCL L01 036
		Protocol 2	PtCL L02 036
		⋮	⋮
		Protocol 50	PtCL L50 036
	CAN Communication protocol	Protocol 51	PtCL L51 036
		Protocol 52	PtCL L52 036
		⋮	⋮
		Protocol 99	PtCL L99 036

Note: When the battery type set to Li, the setting option 12, 13, 21 will change to display percent.

Note: When the battery type set as "LI", the Maximum charge current can't be modified by the user. When the communication fail, the inverter will cut off output.

12	Setting SOC point back to utility source when selecting "SBU priority" or "Solar first" in program 01	b2AC 50% 012 Default 50%, 10%~50% Settable
13	Setting SOC point back to battery mode when selecting "SBU priority" or "Solar first" in program 01	AC2b 95% 013 Default 95%, 30%~100% Settable

21	Low DC cut-off SOC If "LI" is selected in program 5, this program can be set up	CUt4 20% 021 Default 20%, 5%~30% Settable

Note: Any questions about communicating with BMS, please consult with Growatt.

Communicating with battery BMS in parallel system

If need to use communicate with BMS in a parallel system, an external RS485/CAN HUB is needed to converge the communication cables from the parallel inverters to lithium battery.

RS485/CAN Hub:

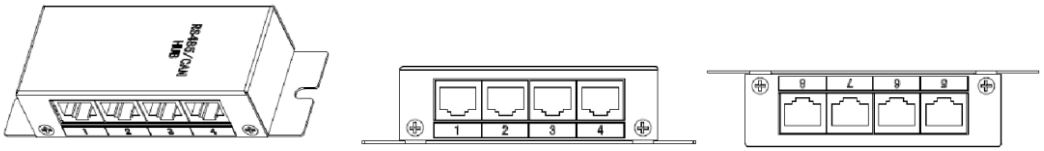

Two inverters in parallel:

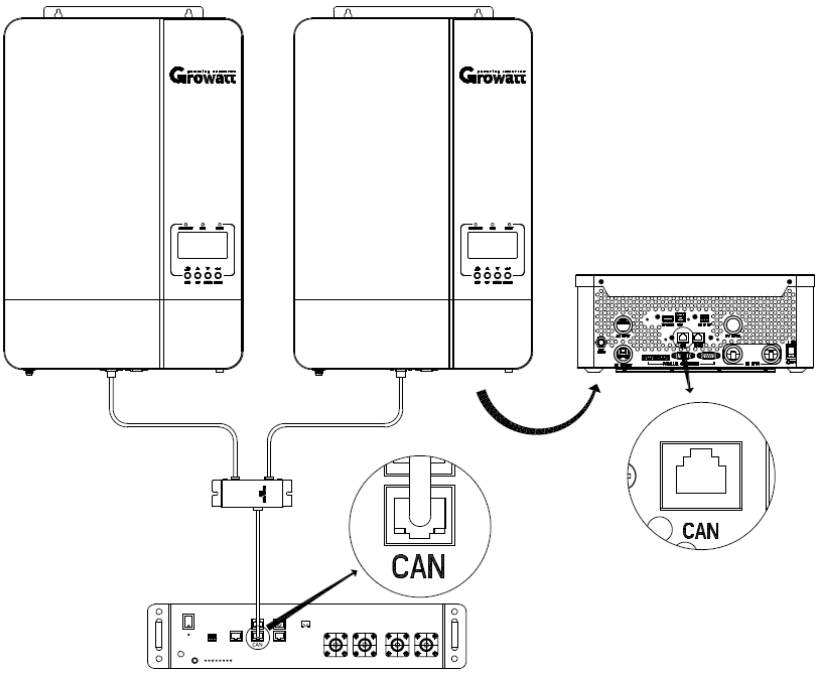

Six inverters in parallel:

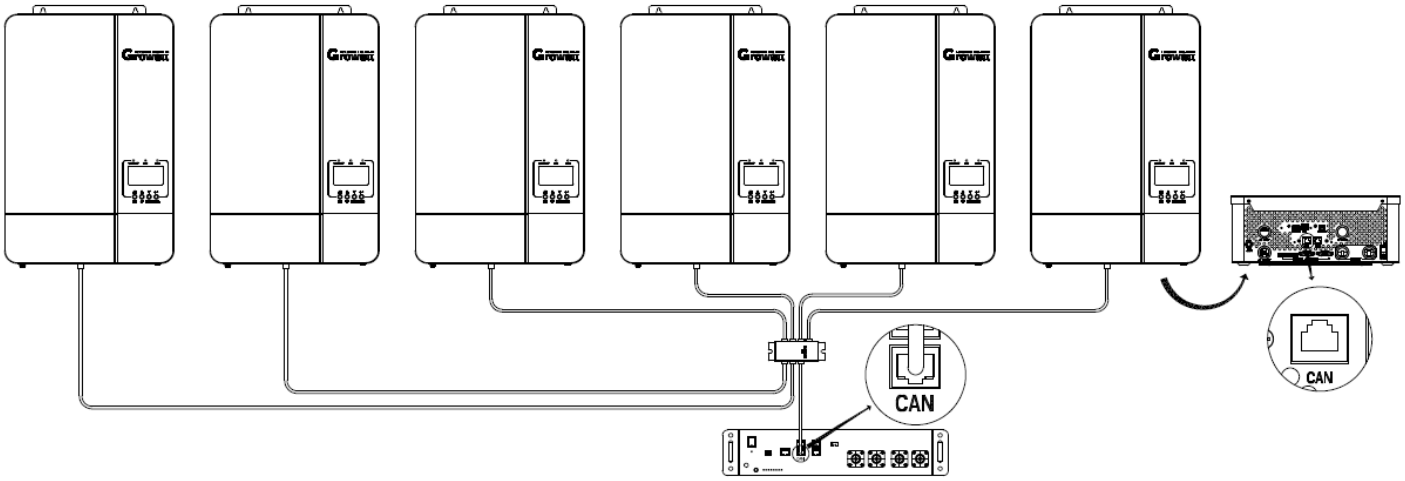

Note: The above diagrams described the parallel system communicate with lithium battery in CAN communication type, and it is the same to the RS485 communication type. Only need to change to "RS485" port if you use RS485 for communication.
Note: The above diagrams show the communication wiring of 2 units and 6 units parallel using. For parallel operation with 3, 4, or 5 units, the communication wiring is similar.

AC Input/Output Connection

CAUTION!! Before connecting to AC input power source, please install a **separate** AC breaker between inverter and AC input power source. This will ensure the inverter can be securely disconnected during maintenance and fully protected from over current of AC input. The recommended spec of AC breaker is 40A for SPF 3500 ES and 50A for SPF 5000 ES.

CAUTION!! There are two terminal blocks with "IN" and "OUT" markings. Please do NOT mis-connect input and output connectors.

WARNING! All wiring must be performed by a qualified personnel.
WARNING! It's very important for system safety and efficient operation to use appropriate cable for AC input connection. To reduce risk of injury, please use the proper recommended cable size as below.
Suggested cable requirement for AC wires

Model	Gauge	Torque Value
SPF 3500 ES	1 * 10 AWG	1.2-1.6 Nm
SPF 5000 ES	1 * 8 AWG	1.2-1.6 Nm

Please follow below steps to implement AC input/output connection:

1. Before making AC input/output connection, be sure to open DC protector or disconnector first.
2. Remove insulation sleeve 10mm for six conductors. And shorten phase L and neutral conductor N 3 mm.
3. Insert AC input wires according to polarities indicated on terminal block and tighten the terminal screws. Be sure to connect PE protective conductor ⏚ first.
   ⏚ **→Ground (yellow-green)**
   L→LINE (brown or black)
   N→Neutral (blue)

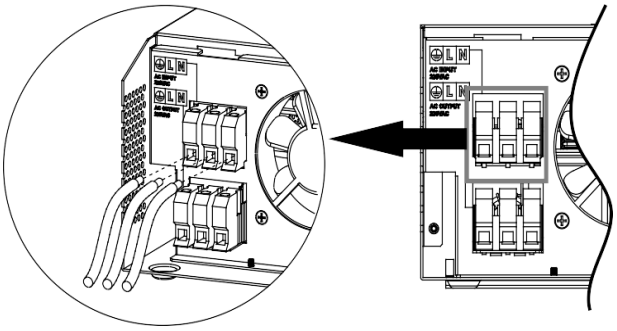

⚠	**WARNING:** Be sure that AC power source is disconnected before attempting to hardwire it to the unit.

4. Then, insert AC output wires according to polarities indicated on terminal block and tighten terminal screws. Be sure to connect PE protective conductor ⏚ first.
   ⏚→**Ground (yellow-green)**
   L→LINE (brown or black)
   N→Neutral (blue)

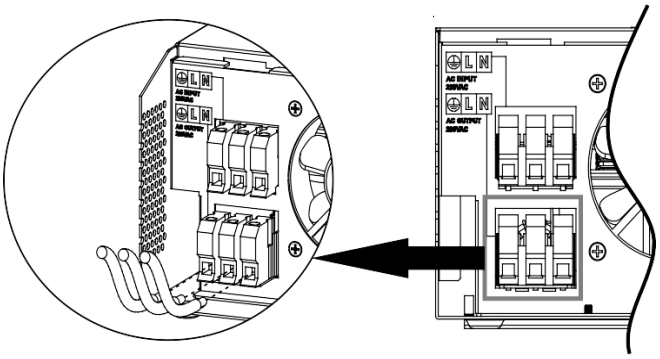

5. Make sure the wires are securely connected.

   CAUTION: Important

   Be sure to connect AC wires with correct polarity. If L and N wires are connected reversely, it may cause utility short-circuited when these inverters are worked in parallel operation.

   CAUTION: Appliances such as air conditioner are required at least 2~3 minutes to restart because it's required to have enough time to balance refrigerant gas inside of circuits. If a power shortage occurs and recovers in a short time, it will cause damage to your connected appliances. To prevent this kind of damage, please check with manufacturer of air conditioner that if it's equipped with time-delay function before installation. Otherwise, this off grid solar inverter will trig overload fault and cut off output to protect your appliance but sometimes it still causes internal damage to the air conditioner.

PV Connection

CAUTION: Before connecting to PV modules, please install **separately** a DC circuit breaker between inverter and PV modules.

WARNING! All wiring must be performed by a qualified personnel.
WARNING! It' very important for system safety and efficient operation to use appropriate cable for PV module connection. To reduce risk of injury, please use the proper recommended cable size as below.

Model	Wire Size	Torque value
SPF 3500 ES	1 * 12 AWG	1.2-1.6 Nm
SPF 5000 ES	1 * 12 AWG	1.2-1.6 Nm

PV Module Selection:

When selecting proper PV modules, please be sure to consider below parameters:

1. Open circuit Voltage (Voc) of PV modules not exceeds max. PV array open circuit voltage of inverter.
2. Open circuit Voltage (Voc) of PV modules should be higher than min. battery voltage.

INVERTER MODEL	SPF 3500 ES	SPF 5000 ES
Max. PV Array Open Circuit Voltage	450Vdc	
PV Array MPPT Voltage Range	120Vdc~430Vdc	

Please follow below steps to implement PV module connection:

1. Remove insulation sleeve 10 mm for positive and negative conductors.

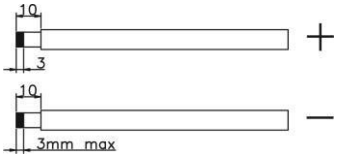

2. Check correct polarity of connection cable from PV modules and PV input connectors. Then, connect positive pole (+) of connection cable to positive pole (+) of PV input connector. Connect negative pole (-) of connection cable to negative pole (-) of PV input connector.

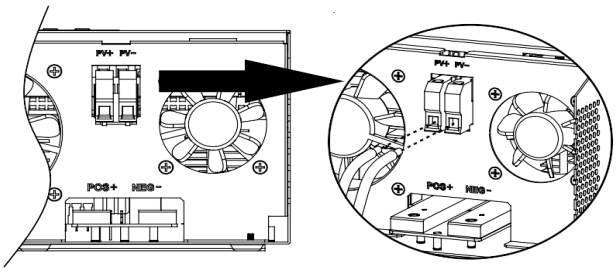

3. Make sure the wires are securely connected.

Final Assembly

After connecting all wiring, please put bottom cover back by screwing

two screws as shown below.

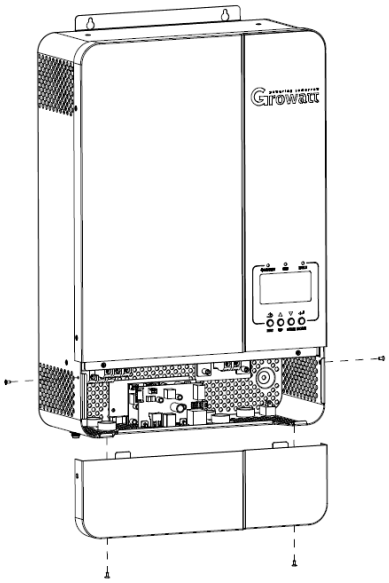

Communication Connection

Please use supplied communication cable to connect to inverter and PC. Insert bundled CD into a computer and follow on-screen instruction to install the monitoring software. For the detailed software operation, please check user manual of software inside of CD.

Dry Contact Signal

There is one dry contact(3A/250VAC) available on the rear panel. It could be used to deliver signal to external device when battery voltage reaches warning level.

<table>
<tr><td rowspan="2">Unit Status</td><td colspan="3" rowspan="2">Condition</td><td colspan="2">Dry contact port:
 
</td></tr>
<tr><td>NC & C</td><td>NO & C</td></tr>
<tr><td>Power Off</td><td colspan="3">Unit is off and no output is powered</td><td>Close</td><td>Open</td></tr>
<tr><td rowspan="5">Power On</td><td colspan="3">Output is powered from Utility</td><td>Close</td><td>Open</td></tr>
<tr><td rowspan="4">Output is powered from Battery or Solar</td><td rowspan="2">Program 01 set as Utility first</td><td>Battery voltage (SOC)< Low DC warning voltage(SOC)</td><td>Open</td><td>Close</td></tr>
<tr><td>Battery voltage(SOC) > Setting value in Program 13 or battery charging reaches floating stage</td><td>Close</td><td>Open</td></tr>
<tr><td rowspan="2">Program 01 is set as SBU or Solar first</td><td>Battery voltage (SOC)< Setting value in Program 12</td><td>Open</td><td>Close</td></tr>
<tr><td>Battery voltage (SOC)> Setting value in Program 13 or battery charging reaches floating stage</td><td>Close</td><td>Open</td></tr>
</table>

Operation

Power ON/OFF

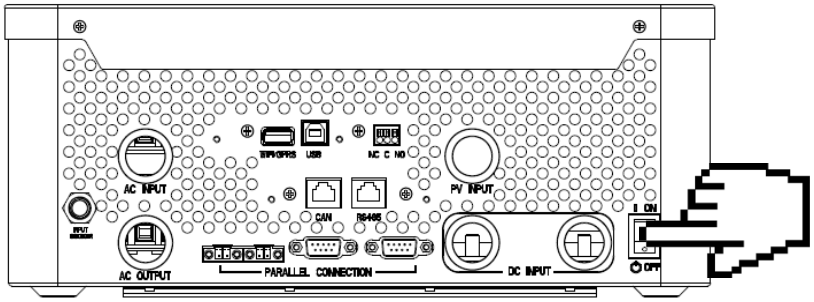

Once the unit has been properly installed and the batteries are connected well, simply press On/Off switch (located on the button of the case) to turn on the unit.

Operation and Display Panel

The operation and display panel, shown in below chart, is on the front panel of the inverter. It includes three indicators, four function keys and a LCD display, indicating the operating status and input/output power information.

1. LCD display
2. Status indicator
3. Charging indicator
4. Fault indicator
5. Function buttons

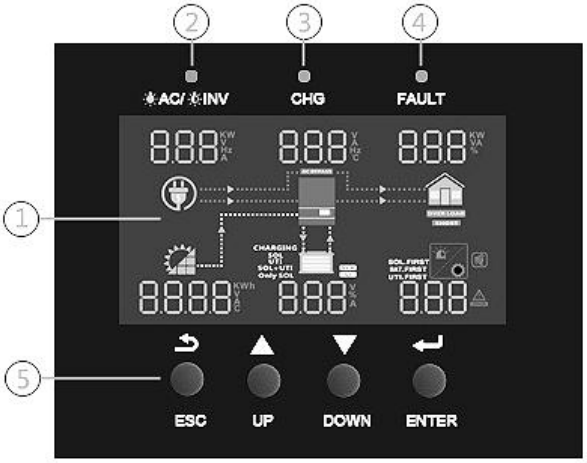

LED Indicator

LED Indicator			Messages
AC / INV	Green	Solid On	Output is powered by utility in Line mode.
		Flashing	Output is powered by battery or PV in battery mode.
CHG	Green	Solid On	Battery is fully charged.
		Flashing	Battery is charging.
⚠ FAULT	Red	Solid On	Fault occurs in the inverter.
		Flashing	Warning condition occurs in the inverter.

Function Buttons

Button	Description
ESC	To exit setting mode
UP	To go to previous selection
DOWN	To go to next selection
ENTER	To confirm the selection in setting mode or enter setting mode

LCD Display Icons

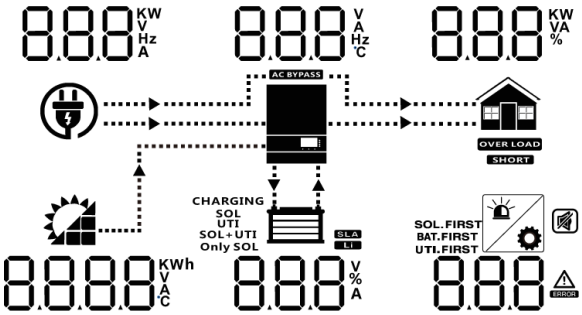

Icon	Description
AC Input Information	
	AC input icon
KW V Hz	Indicate AC input power, AC input voltage, AC input frequency, AC input current
AC BYPASS	Indicate AC power loads in bypass
PV Input Information	
	PV input icon
KWh V A °C	Indicate PV power, PV voltage, PV current, etc
Output Information	
	Inverter icon
V A Hz °C	Indicate output voltage, output current, output frequency, inverter temperature
Load Information	
	Load icon
KW VA %	Indicate power of load, power percentage of load
OVER LOAD	Indicate overload happened
SHORT	Indicate short circuit happened
Battery Information	
	Indicate battery level by 0-24%, 25-49%, 50-74% and 75-100% in battery mode and charging status in line mode.
V % A	Indicate battery voltage, battery percentage, battery current
SLA	Indicate SLA battery
Li	Indicate lithium battery
CHARGING SOL SOL+UTI Only SOL	Indicate charging source priority: solar first, solar and utility, or only solar
Other Information	
SOL.FIRST BAT.FIRST UTI.FIRST	Indicate output source priority: solar first, utility first, SBU mode or SUB mode
ERROR	Indicate warning code or fault code
	Indicate a warning or a fault is happening
	Indicate it's during setting values
	Indicate the alarm is disabled

In AC mode, battery icon will present Battery Charging Status		
Status	Battery voltage	LCD Display
Constant Current mode / Constant Voltage mode	<2V/cell	4 bars will flash in turns.
	2 ~ 2.083V/cell	Bottom bar will be on and the other three bars will flash in turns.
	2.083 ~ 2.167V/cell	Bottom two bars will be on and the other two bars will flash in turns.
	> 2.167 V/cell	Bottom three bars will be on and the top bar will flash.
Floating mode. Batteries are fully charged.		4 bars will be on.

In battery mode, battery icon will present Battery Capacity		
Load Percentage	Battery Voltage	LCD Display
Load >50%	< 1.717V/cell	
	1.717V/cell ~ 1.8V/cell	
	1.8 ~ 1.883V/cell	
	> 1.883 V/cell	
50%> Load > 20%	< 1.817V/cell	
	1.817V/cell ~ 1.9V/cell	
	1.9 ~ 1.983V/cell	
	> 1.983	
Load < 20%	< 1.867V/cell	
	1.867V/cell ~ 1.95V/cell	
	1.95 ~ 2.033V/cell	
	> 2.033	

LCD Setting

After pressing and holding ENTER button for 3 seconds, the unit will enter setting mode. Press "UP" or "DOWN" button to select setting programs. Then press "ENTER" button to confirm the selection or ESC button to exit.

Program	Description	Setting Option	
01	Output source priority: To configure load power source priority	Solar first	OPPr SOL 001 (SOL.FIRST)
		Solar energy provides power to the loads as first priority. If solar energy is not sufficient to power all connected loads, battery energy will supply power the loads at the same time. Utility provides power to the loads only when any one condition happens: - Solar energy is not available - Battery voltage drops to either low-level warning voltage or the setting point in program 12.	
		Utility first (default)	OPPr UtI 001 (UTI.FIRST)
		Utility will provide power to the loads as first priority. Solar and battery energy will provide power to the loads only when utility power is not available.	
		SBU priority	OPPr SbU 001 (BAT.FIRST)
		Solar energy provides power to the loads as first priority. If solar energy is not sufficient to power all connected loads, battery will supply power to the loads at the same time. Utility provides power to the loads only when battery voltage drops to either low-level warning voltage or the setting point in program 12.	
		SUB priority	OPPr SUb 001 (SOL.FIRST UTI.FIRST)
		Solar energy provides power to the loads as first priority. If solar energy is not sufficient to power all connected loads, solar and utility will power loads at the same time. Battery provides power to the loads only when solar energy is not sufficient and there is no utility.	
02	Maximum charging current: set total charging current for solar and utility chargers. (Max. charging current = utility charging current + solar charging current)	CHGI 60A 002 SPF 3500 ES: Default 60A, 10A~80A Settable SPF 5000 ES: Default 60A, 10A~100A Settable (If LI is selected in Program 5, this program can't be set up)	
03	AC input voltage range	Appliance (default) ACU APL 003 If selected, acceptable AC input voltage range will be within 90~280VAC	
		UPS ACU UPS 003 If selected, acceptable AC input voltage range will be within 170~280VAC	
		Generator ACU GEN 003 If selected, acceptable AC input voltage range will be within 90~280VAC In this mode, the MAX. charging current is 30A	

04	Power saving mode enable/disable	Saving mode disable (default) SAVE dIS 004 If disabled, no matter connected load is low or high, the on/off status of inverter output will not be effected.	
		Saving mode enable SAVE ENA 004 If enabled, the output of inverter will be off when connected load is pretty low or not detected.	
05	Battery type	AGM (default) bAtt AGM 005	
		Flooded bAtt FLd 005	
		Lithium (only suitable when communicated with BMS) bAtt LI 005	
		User-Defined bAtt USE 005 If "User-Defined" is selected, battery charge voltage and low DC cut-off voltage can be set up in program 19, 20 and 21.	
		User-Defined 2（suitable when lithium battery without BMS communication） bAtt US2 005 If "User-Defined 2" is selected, battery charge voltage and low DC cut-off voltage can be set up in program 19, 20 and 21. It is recommended to set to the same voltage in program 19 and 20(full charging voltage point of lithium battery). The inverter will stop charging when the battery voltage reaches this setting.	
06	Auto restart when overload occurs	Restart disable (default) LdrS dIS 006	Restart enable LdrS ENA 006
07	Auto restart when over temperature occurs	Restart disable (default) trrS dIS 007	Restart enable trrS ENA 007
08	Output voltage *This setting is only available when the inverter is in standby mode (Switch off).	230V (default) OUtV 230 008	220V OUtV 220 008
		240V OUtV 240 008	208V OUtV 208 008
09	Output frequency *This setting is only available when the inverter is in standby mode (Switch off).	50Hz (default) OUtF 50 009	60Hz OUtF 60 009
10	Number of series batteries connected	bAtN 4 010 (e.g. Showing batteries are connected in 4 series)	

11	Maximum utility charging current Note: If setting value in Program 02 is smaller than that in Program 11, the inverter will apply charging current from Program 02 for utility charger	AC1 30A 011 SPF 3500 ES :Default 30A, 0A~60A Settable SPF 5000 ES :Default 30A, 0A~80A Settable (If LI is selected in Program 5, this program can't be set up)	
12	Setting voltage point back to utility source when selecting "SBU priority" or "Solar first" in program 01	b2AC 46.0V 012 Default 46.0V, 44.0V~51.2V Settable	
13	Setting voltage point back to battery mode when selecting "SBU priority" or "Solar first" in program 01	AC2b 54.0V 013 Default 54.0V, 48.0V~58.0V Settable	
14	Charger source priority: To configure charger source priority	If this off grid solar inverter is working in Line, Standby or Fault mode, charger source can be programmed as below:	
		Solar first SOL CG.Pr CSO 014	Solar energy will charge battery as first priority. Utility will charge battery only when solar energy is not available.
		Solar and Utility SOL+UTI CG.Pr SNU 014	Solar energy and utility will both charge battery.
		Only Solar Only SOL CG.Pr OSO 014	Solar energy will be the only charger source no matter utility is available or not.
		If this off grid solar inverter is working in Battery mode or Power saving mode, only solar energy can charge battery. Solar energy will charge battery if it's available and sufficient.	
15	Alarm control	Alarm on (default) buZZ ON 015	Alarm off buZZ OFF 015
16	Backlight control	Backlight on (default) LCdb ON 016	Backlight off LEdb OFF 016
17	Beeps while primary source is interrupted	Alarm on (default) ALAr ON 017	Alarm off ALAr OFF 017
18	Overload bypass: When enabled, the unit will transfer to line mode if overload occurs in battery mode.	Bypass disable (default) byP dIS 018	Bypass enable byP ENA 018
19	C.V. charging voltage. If self-defined is selected In program 5, this program can be set up	CV 56.4V 019 Default 56.4V, 48.0V~58.4V Settable	
20	Floating charging voltage. If self-defined is selected in program 5, this program can be set up	FLtV 54.0V 020 Default 54.0V, 48.0V~58.4V Settable	

21	Low DC cut-off voltage. If self-defined is selected in program 5, this program can be set up. Low DC cut-off voltage will be fixed to setting value no matter what percentage of load is connected.	CUt 420V 021 Default 42.0V, 40.0V~48.0V Settable When reach Low DC cut-off voltage: 1) If battery power is only power source available, inverter will shut down. 2) If PV energy and battery power are available, inverter will charge battery without AC output. 3) If PV energy, battery power and utility are all available, inverter will transfer to line mode and provide output power to loads, and charge the battery at the same time.	
23	AC output mode *This setting is only available when the inverter is in standby mode (Switch off). **Note:** Parallel operation can only work when battey connected	Single: PrLL SIG 023	Parallel: PrLL PAL 023
		L1 Phase: PrLL 3P1 023	L2 Phase: PrLL 3P2 023
		L3 Phase: PrLL 3P3 023	
		When the units are used in parallel with single phase, please select "PAL" in program 23. It requires 3 inverters to support three-phase equipment, 1 inverter in each phase. Please select "3P1" in program 23 for the inverters connected to L1 phase, "3P2" in program 23 for the inverters connected to L2 phase and "3P3" in program 23 for the inverters connected to L3 phase. Be sure to connect share current cable to units which are on the same phase. Do NOT connect share current cable between units on different phases. Besides, power saving function will be automatically disabled.	
28	Address setting (for expansion)	Addr 1 028 Default 1, 1~255 Settable	
37	Real time setting---Year	2018 037	Default 2018, range 2018~2099
38	Real time setting---Month	mon 12 038	Default 01, range 01~12
39	Real time setting---Date	dAY 13 039	Default 01, range 01~31
40	Real time setting---Hour	HOUr 13 040	Default 00, range 00~23
41	Real time setting---Minute	min 50 041	Default 00, range 00~59
42	Real time setting---Second	SEC 50 042	Default 00, range 00~59

43	Battery equalization	Battery equalization enable E9 ENA 043	Battery equalization disable(default) E9 dIS 043
		If "Flooded" or "User-Defined" is selected in program 05, this program can be set up.	
44	Battery equalization voltage	E9.V 58.4V 044 Default 58.4V, 48.0V~58.4V Settable	
45	Battery equalized time	min E9t 60 045	Default 60min, 5min~900min Settable
46	Battery equalized timeout	min E9t0 120 046	Default 120min, 5min~900min Settable
47	Equalization interval	dAY E9i 30 047	Default 30days, 1 days~90 days Settable
48	Equalization activated immediately	Equalization activated immediately on E9 ON 048	Equalization activated immediately off(default) E9 OFF 048
		If equalization function is enabled in program 43, this program can be setup. If "On" is selected in this program, it's to activate battery equalization immediately and LCD main page will shows "E9". If "Off" is selected, it will cancel equalization function until next activated equalization time arrives based on program 47setting. At this time, "E9" will not be shown in LCD main page.	
49	Utility charging time	0000(default) Allow utility to charge the battery all day run. CHG tIm 0000 049	The time allows utility to charge the battery. Use 4 digits to represent the time period, the upper two digits represent the time when utility start to charge the battery, setting range from 00 to 23, and the lower two digits represent the time when utility end to charge the battery, setting range from 00 to 23. (eg: 2320 represents the time allows utility to charge the battery is from 23:00 to the next day 20:59, and the utility charging is prohibited outside of this period)
50	AC output time	0000(default) Allow inverter to power the load all day run. OUP tIm 0000 050	The time allows inverter to power the load. Use 4 digits to represent the time period, the upper two digits represent the time when inverter start to power the load, setting range from 00 to 23, and the lower two digits represent the time when inverter end to power the load, setting range from 00 to 23. (eg: 2320 represents the time allows inverter to power the load is from 23:00 to the next day 20:59, and the inverter AC output power is prohibited outside of this period)

Display Information

The LCD display information will be switched in turns by pressing "UP" or "DOWN" key. The selectable information is switched as below order: voltage, frequency, current, power, firmware version.

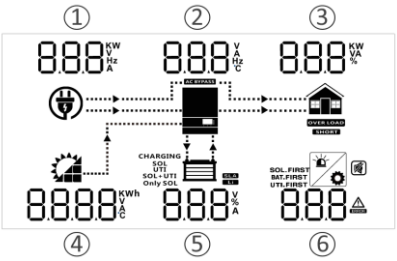

Setting Information	LCD display
① AC Input voltage ② Output voltage ③ Load percentage ④ PV input voltage ⑤ Battery voltage ⑥ Warning or Fault code (Default Display Screen)	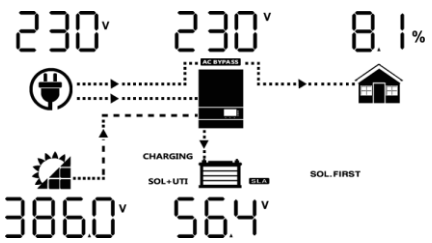
① AC Input frequency ② Output frequency ③ Load power in VA ④ PV energy sum in KWH ⑤ Battery percentage ⑥ Warning or Fault code	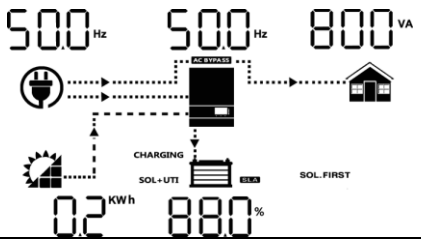
① AC Input current ② Output current ③ Load percentage ④ PV input current ⑤ Battery charging current ⑥ Warning or Fault code	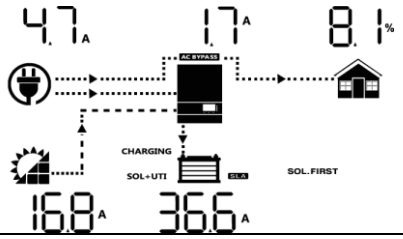
① AC input power in Watts ② Inverter temperature ③ Load power in Watts ④ PV energy sum in KWH ⑤ Battery percentage ⑥ Warning or Fault code	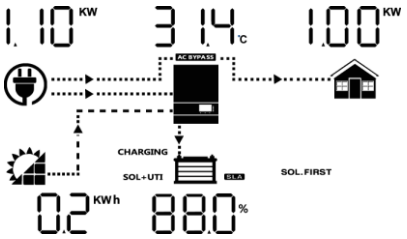
Firmware version (CPU1: 040-00-b21; CPU2:041-00-b21)	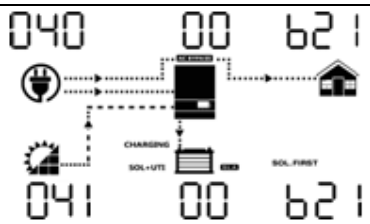
Time (15:20:10, December 15, 2018)	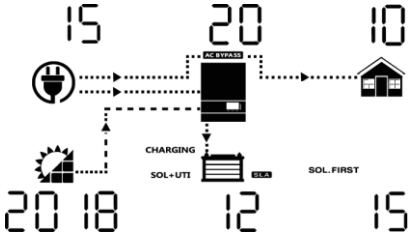

Operating Mode Description

Operation mode	Description	LCD display	
Standby mode / Power saving mode **Note:** *Standby mode: The inverter is not turned on yet but at this time, the inverter can charge battery without AC output. *Power saving mode: If enabled, the output of inverter will be off when connected load is pretty low or not detected.	No output is supplied by the unit but it still can charge batteries.	Charging by utility and PV energy. 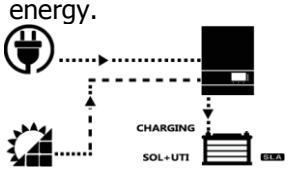	Charging by utility 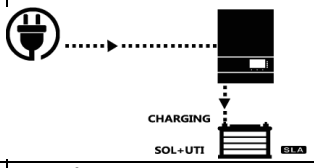
		Charging by PV energy 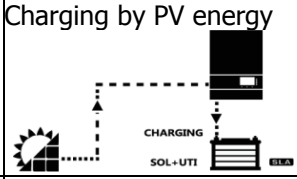	No charging 
Fault mode Note: *Fault mode: Errors are caused by inside circuit error or external reasons such as over temperature, output short circuited and so on.	PV energy and utility can charge batteries.	Charging by utility and PV energy 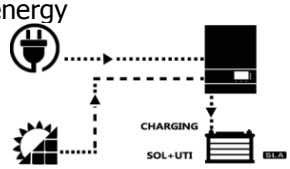	Charging by utility 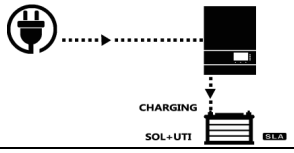
		Charging by PV energy 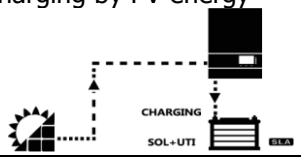	No charging 
Line Mode	The unit will provide output power from the mains. It can also charge the battery at line mode.	Charging by PV energy 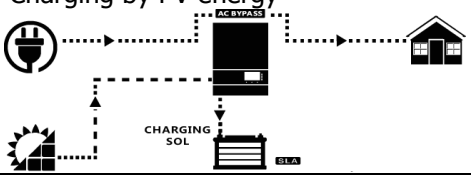	
		Charging by utility 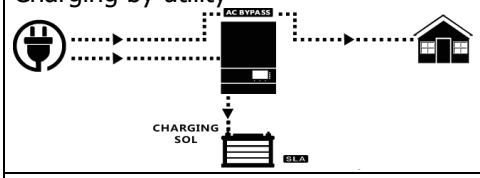	
		No battery connected 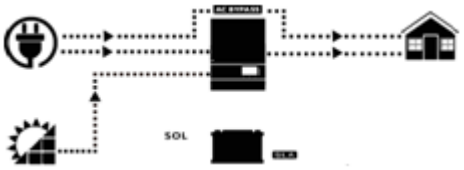	
Battery Mode	The unit will provide output power from battery and PV power.	Power from battery and PV energy 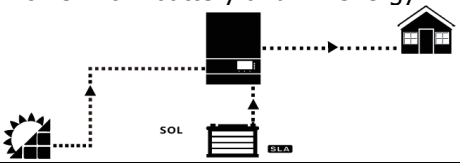	
		Power from battery only 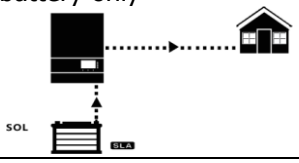	

Parallel Installation Guide

Introduction

This inverter can be used in parallel with two different operation modes.

1. Parallel operation in single phase with up to 6 units.
2. Maximum 6 units work together to support 3-phase equipment. Four units support one phase maximum.

Note: If the package includes share current cable and parallel cable, the inverter is default supported parallel operation. You may skip section 3. If not, please purchase parallel kit and install this unit by following instruction from professional technical personnel in local dealer.

Package Contents

In parallel kit, you will find the following items in the package:

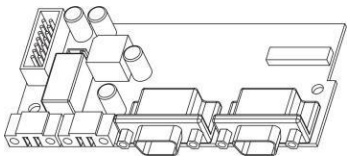

Parallel board

Parallel communication cable

Current sharing cable

Parallel Board Installation

Step 1: Remove wire cover by unscrewing all screws.

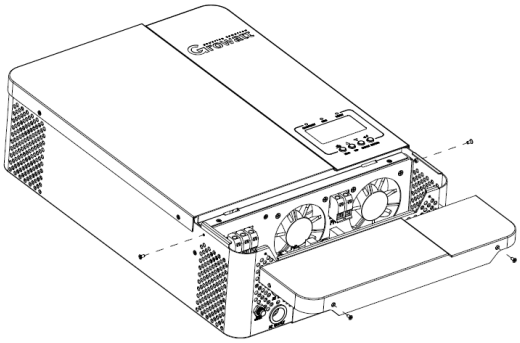

Step 2: Remove WiFi/GPRS communication board and CAN/RS485 communication board by unscrewing screws as below chart.

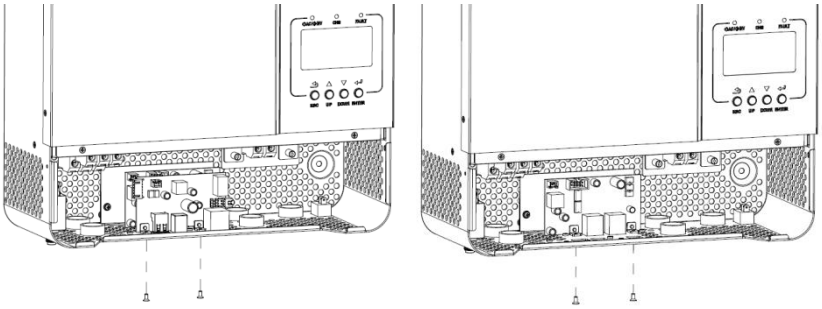

Step 3: Remove two screws as below chart and remove 2-pin and 14-pin cables. Take out the board under the communication boards.

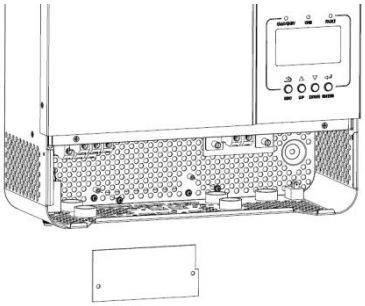

Step 4: Remove two screws as below chart to take out cover of parallel communication.

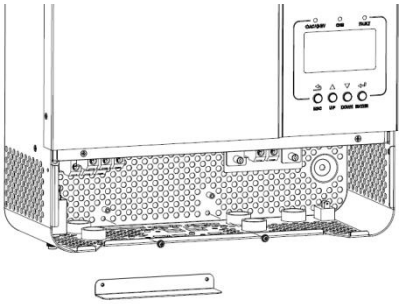

Step 5: Install new parallel board with 2 screws tightly.

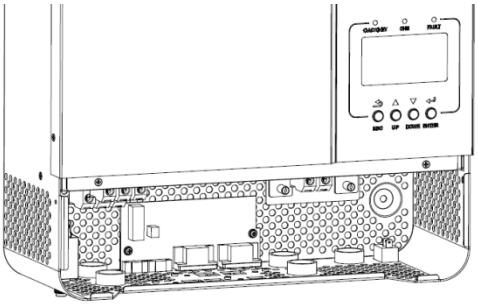

Step 6: Re-connect 2-pin and 14-pin to original position.

Parallel board

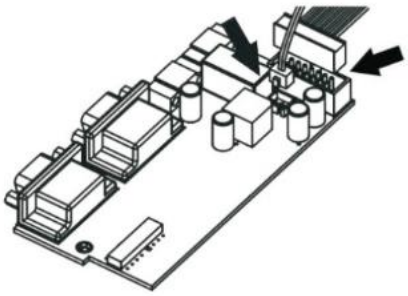

WiFi/GPRS communication board

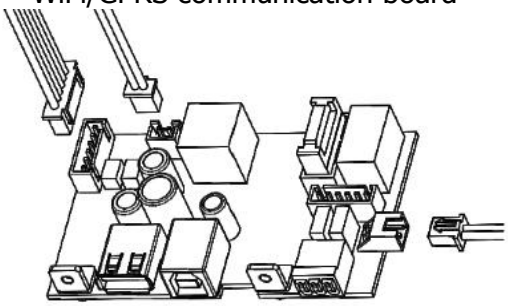

CAN/RS485 communication board

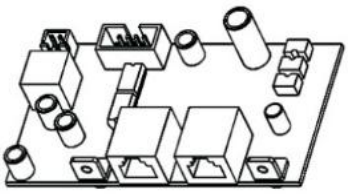

Step 7: Put communication boards back to the unit.

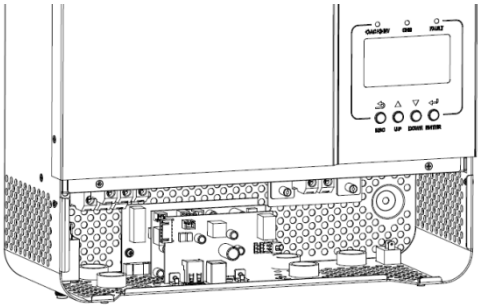

Step 8: Put wire cover back to the unit. Now the inverter is providing parallel operation function.

Mounting the Unit

When installing multiple units, please follow below chart.

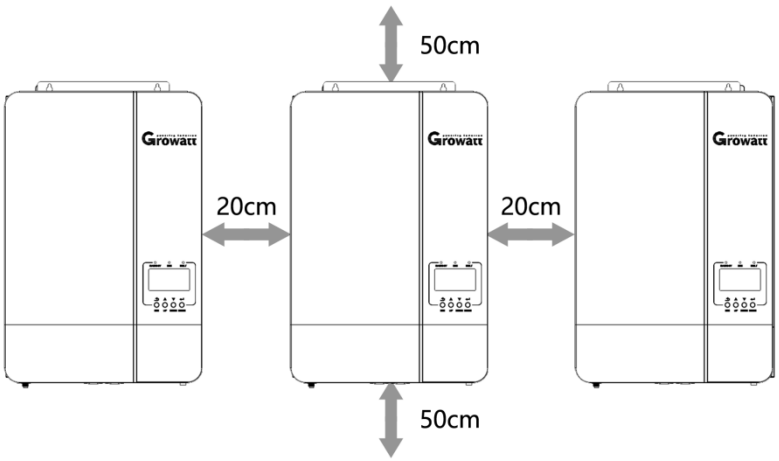

Note: For proper air circulation to dissipate heat, allow a clearance of approx. 20cm to the side and approx. 50 cm above and below the unit. Be sure to install each unit in the same level.

Wiring Connection

The cable size of each inverter is shown as below

Recommended battery cable and terminal size for each inverter:

Model	Wire Size	Torque value
SPF 3500 ES	1 * 4 AWG	2-3 Nm
SPF 5000 ES	1 * 2 AWG	2-3 Nm

Ring terminal:

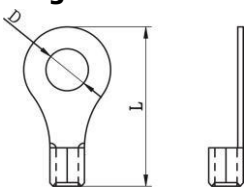

WARNING: Be sure the length of all battery cables is the same. Otherwise, there will be voltage difference between inverter and battery to cause parallel inverters not working.

You need to connect the cables of each inverter together. Take the battery cables for example: You need to use a connector or bus-bar as a joint to connect the battery cables together, and then connect to the battery terminal. The cable size used from joint to battery should be X times cable size in the tables above. "X" indicates the number of inverters connected in parallel.

Regarding AC input and output, please also follow the same principle.

Recommended AC input and output cable size for each inverter:

Model	Gauge	Torque Value
SPF 3500 ES	1 * 10 AWG	1.2-1.6 Nm
SPF 5000 ES	1 * 8 AWG	1.2-1.6 Nm

CAUTION!! Please install the breaker at the battery and AC input side. This will ensure the inverter can be securely disconnected during maintenance and fully protected from over current of battery or AC input.

Recommended breaker specification of battery for each inverter:

Model	1 unit*
SPF 3500 ES	100A / 60VDC
SPF 5000 ES	150A / 60VDC

*If you want to use only one breaker at the battery side for the whole system, the rating of the breaker should be X times current of 1 unit. "X" indicates the number of inverters connected in parallel.

Recommended breaker specification of AC input with single phase:

Model	2 units	3 units	4 units	5 units	6 units
SPF 3500 ES	80A/230VAC	120A/230VAC	160A/230VAC	200A/230VAC	240A/230VAC
SPF 5000 ES	100A/230VAC	150A/230VAC	200A/230VAC	250A/230VAC	300A/230VAC

Note1: You can use 40A breaker for SPF 3500 ES and 50A for SPF 5000 ES for only 1 unit, and each inverter has a breaker at its AC input.

Note2: Regarding three phase system, you can use 4 poles breaker, the rating is up to the current of the phase which has the maximum units. Or you can follow the suggestion of note 1.

Recommended battery capacity

Inverter parallel numbers	2	3	4	5	6
Battery Capacity	400AH	600AH	800AH	1000AH	1200AH

WARNING! Be sure that all inverters will share the same battery bank. Otherwise, the inverters will transfer to fault mode.

Parallel Operation in Single Phase

WARNING! All inverters must be connected to the same batteries and ensure each group of cables from the inverters to the batteries in the same length.

Two inverters in parallel:

Power Connection

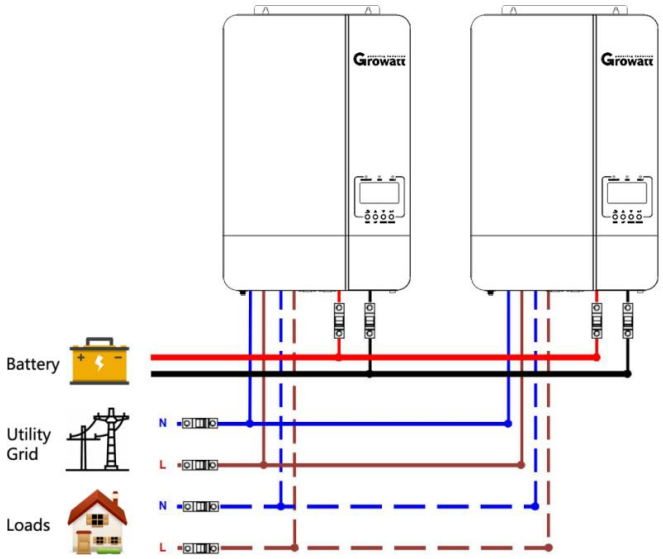

Communication Connection

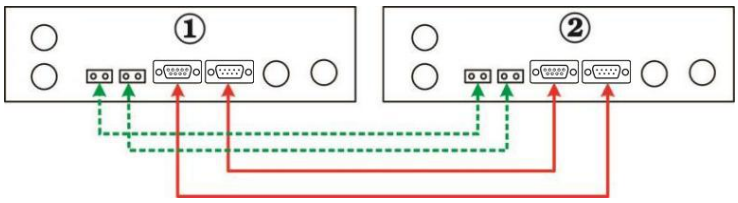

Three inverters in parallel:

Power Connection

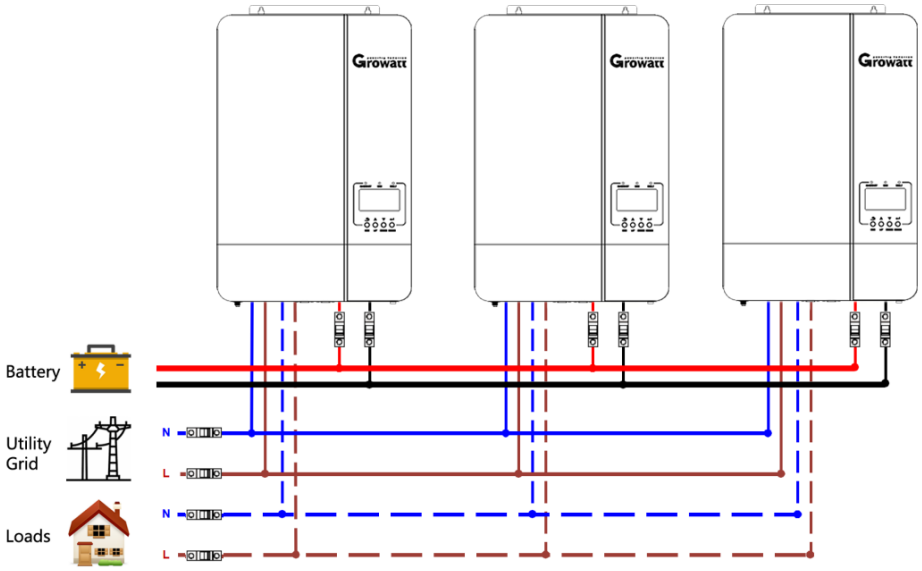

Communication Connection

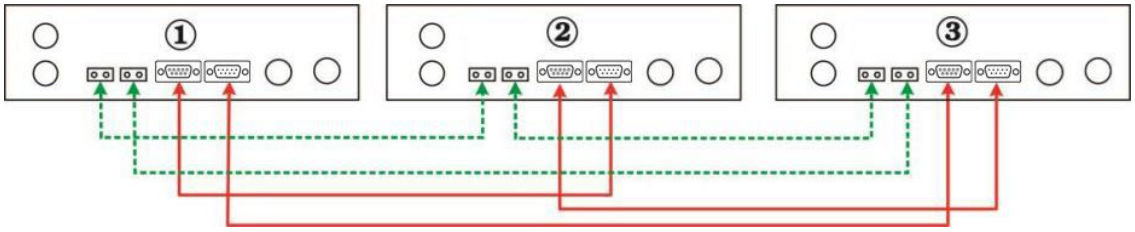

Four inverters in parallel:

Power Connection

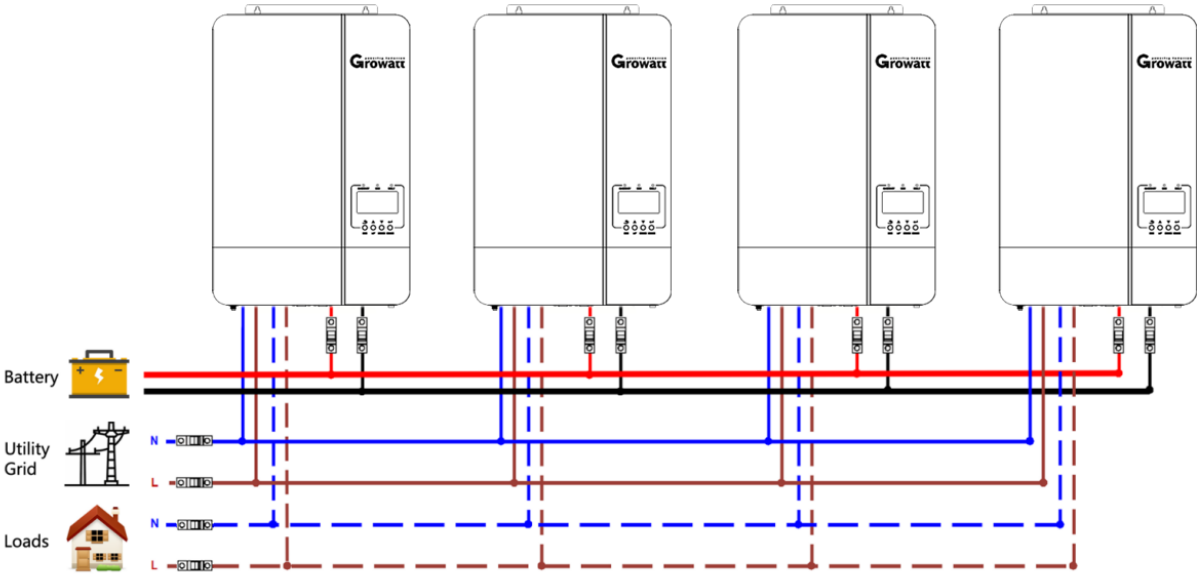

Communication Connection

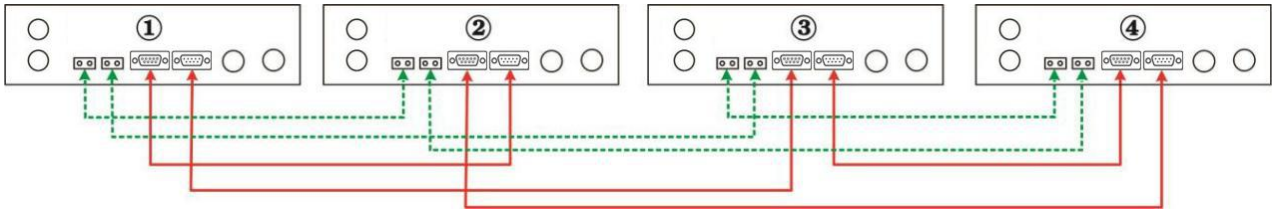

Five inverters in parallel:

Power Connection

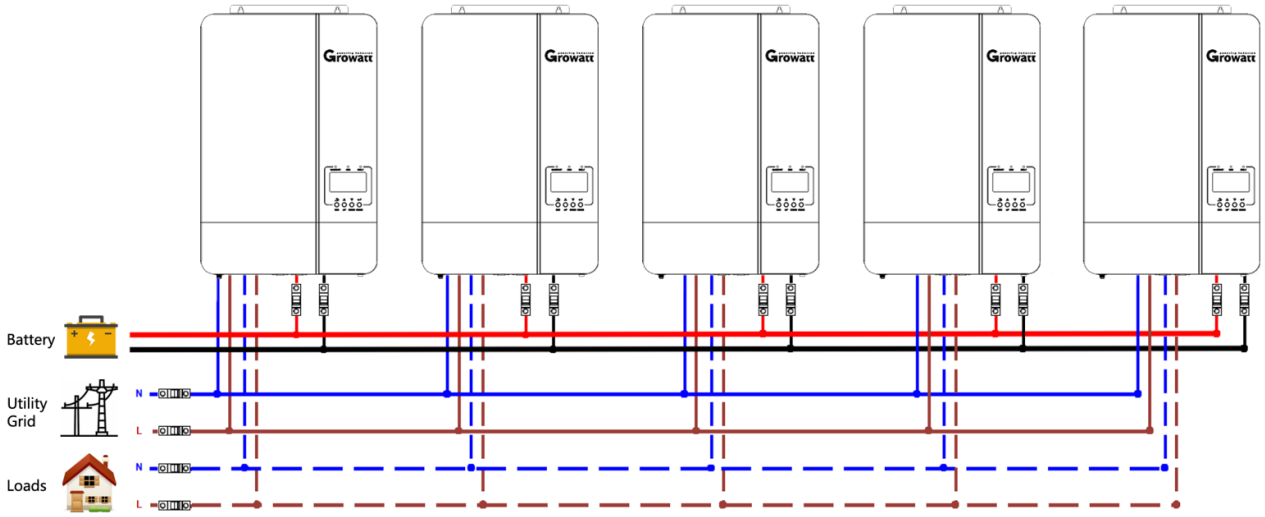

Communication Connection

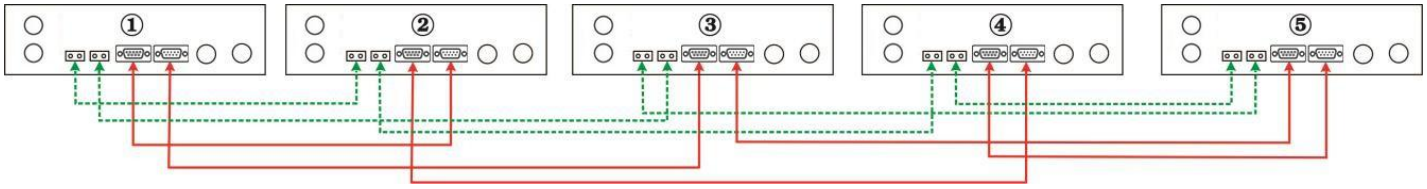

Six inverters in parallel:

Power Connection

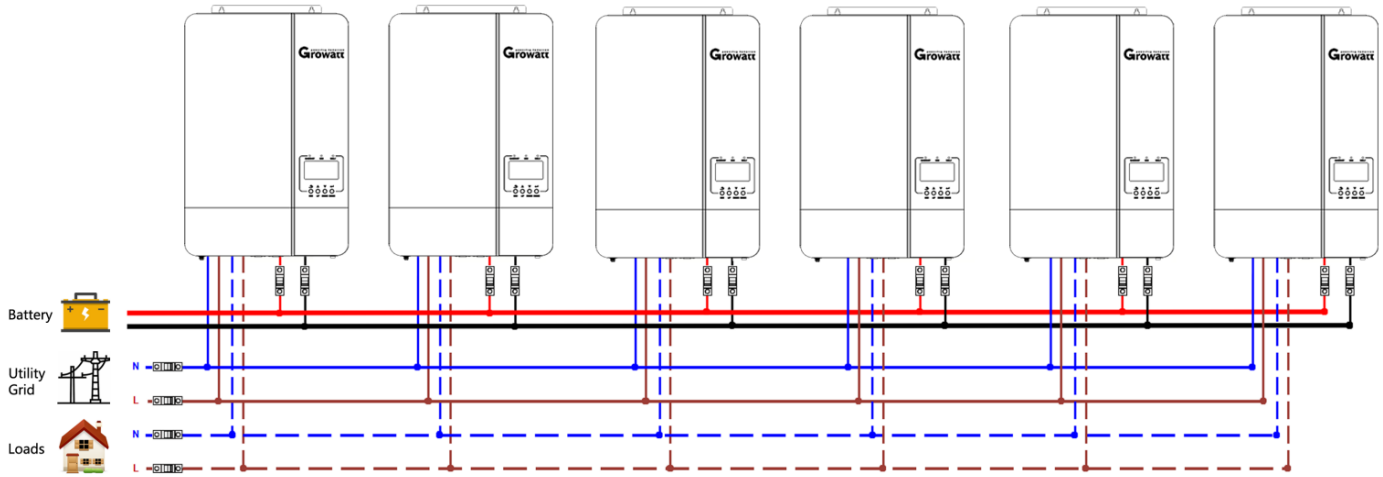

Communication Connection

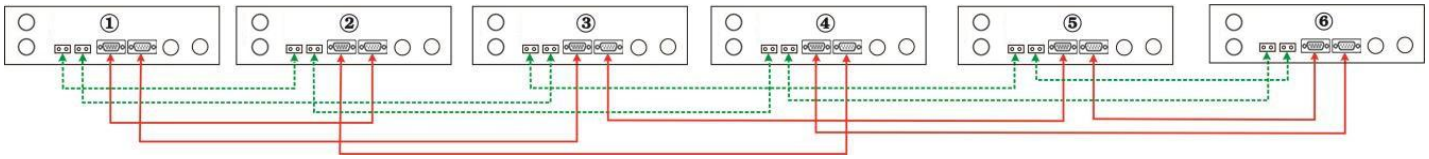

Parallel Operation in Three Phase

WARNING! All inverters must be connected to the same batteries and ensure each group of cables from the inverters to the batteries in the same length.

One inverter in each phase:

Power Connection

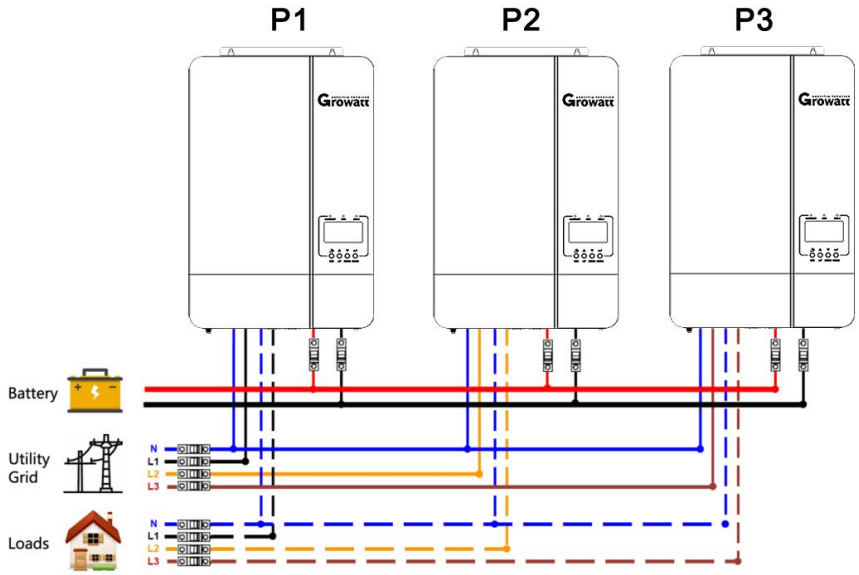

Communication Connection

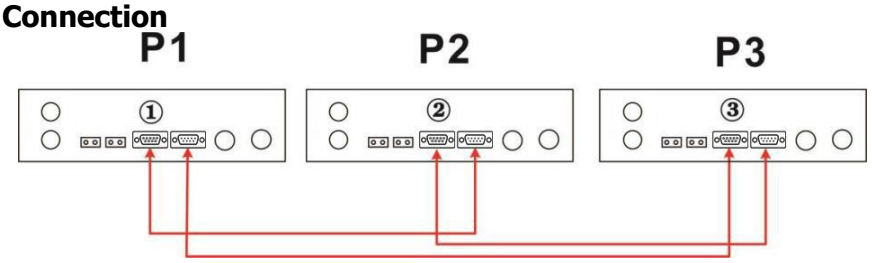

Two inverters in one phase and only one inverter for the remaining phases:

Power Connection

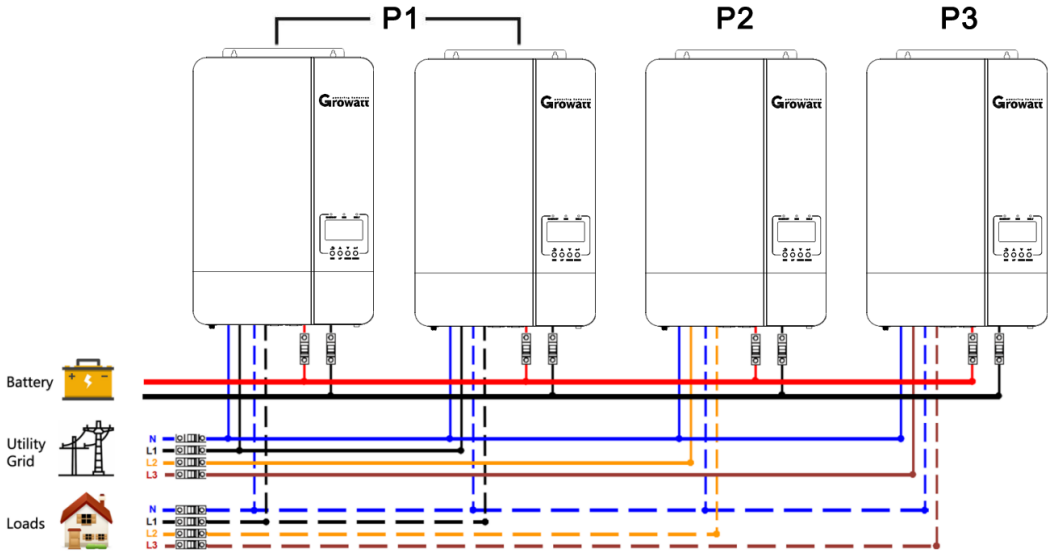

Communication Connection

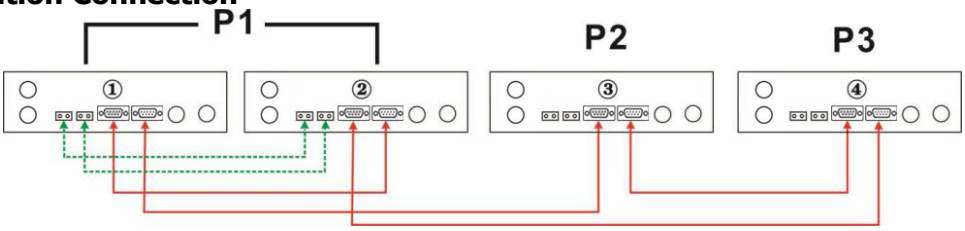

Two inverters in two phases and only one inverter for the remaining phase:

Power Connection

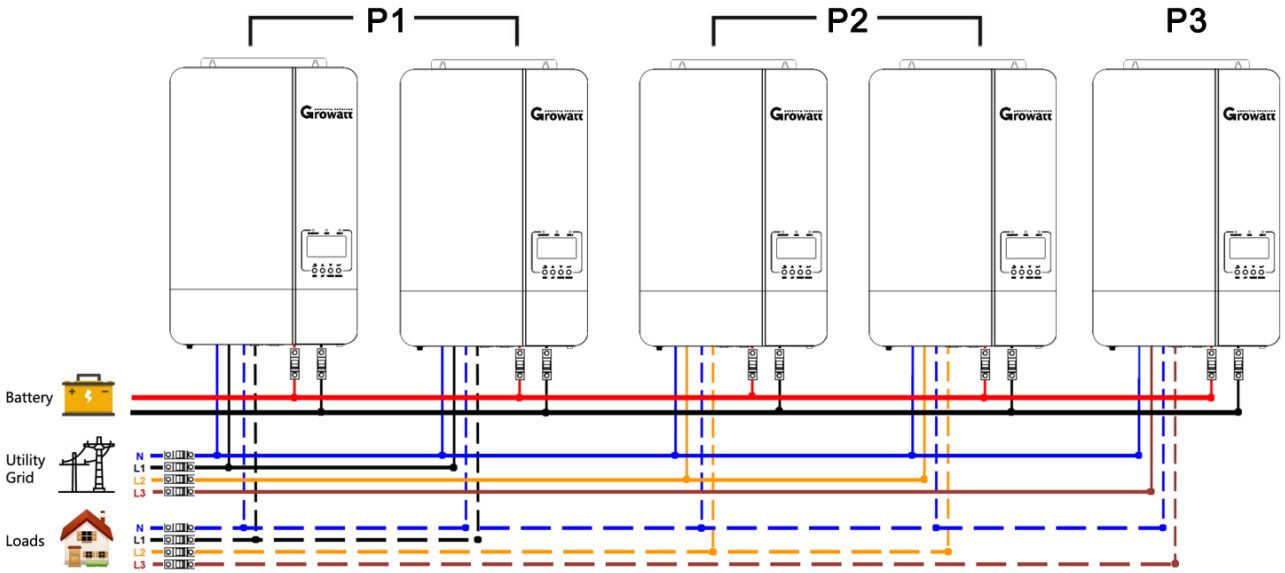

Communication Connection

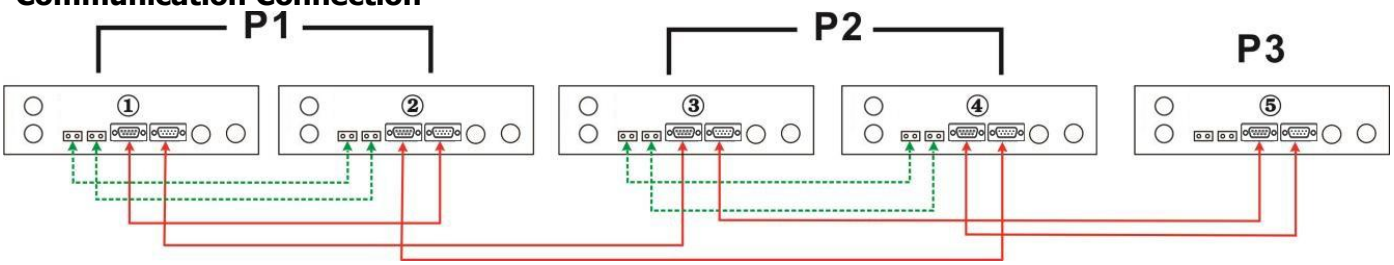

Three inverters in one phase and only one inverter for the remaining two phases:

Power Connection

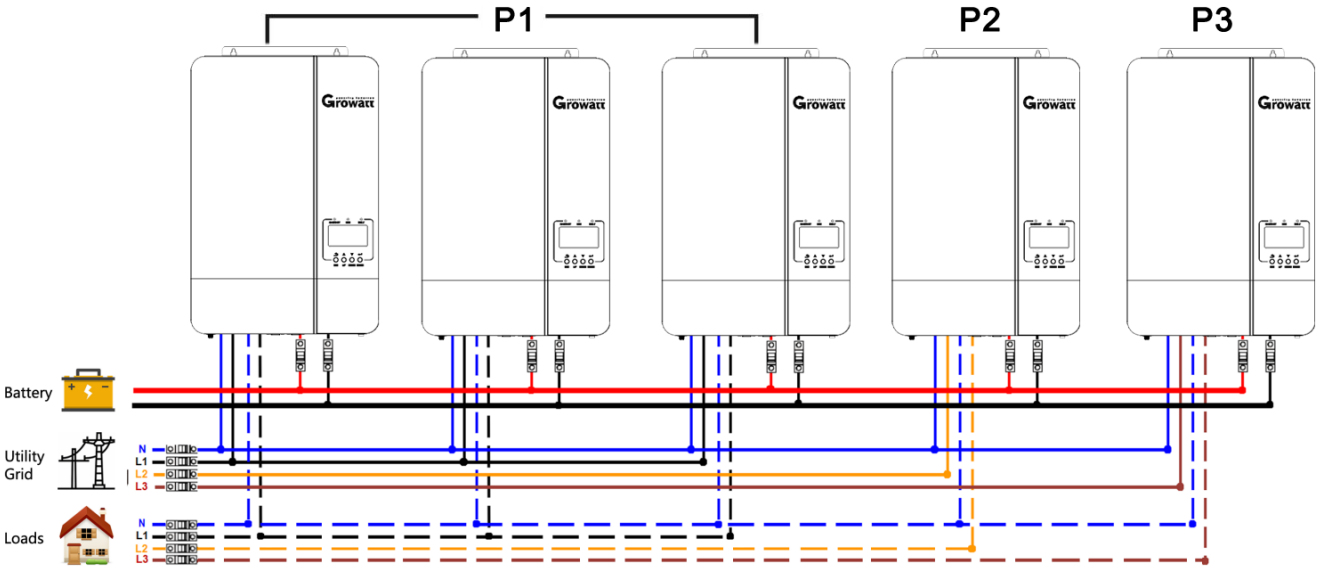

Communication Connection

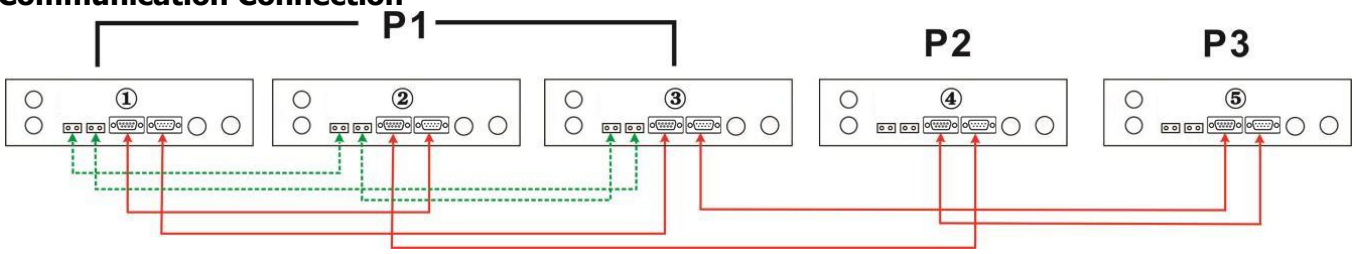

Two inverters in each phase:

Power Connection

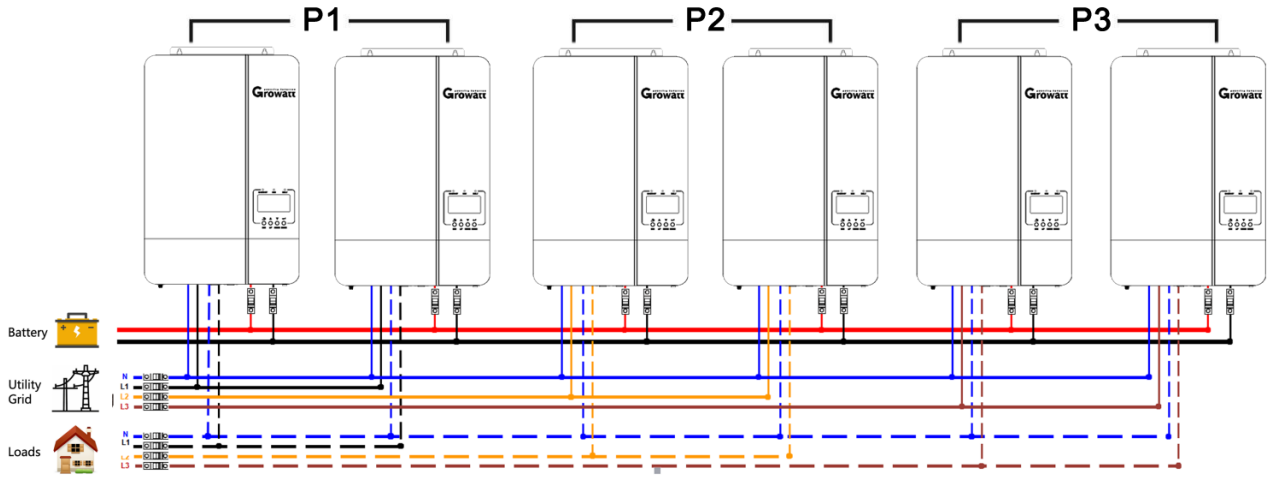

Communication Connection

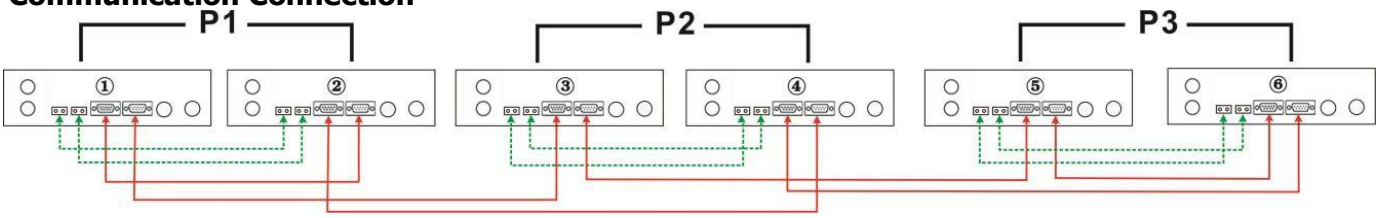

Three inverters in one phase, two inverters in second phase and one inverter for the third phase:

Power Connection

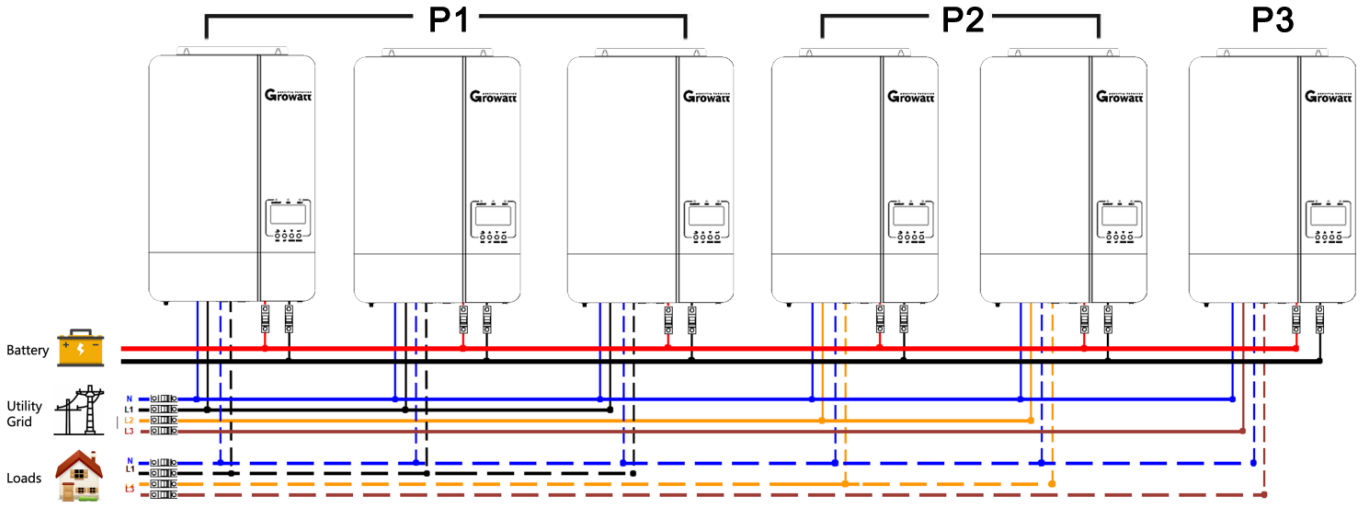

Communication Connection

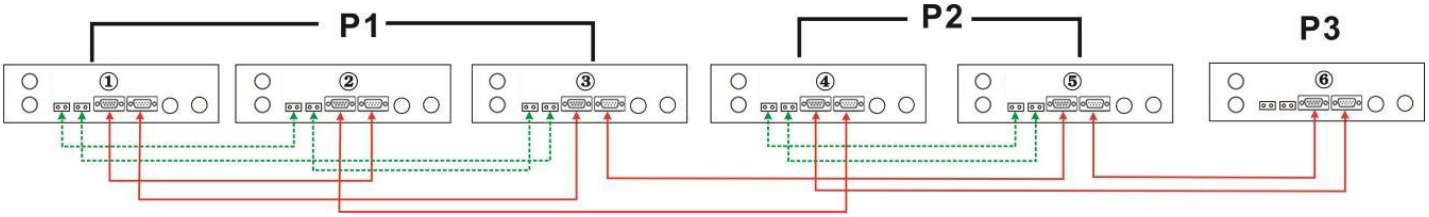

Four inverters in one phase and one inverter for the other two phases:

Power Connection

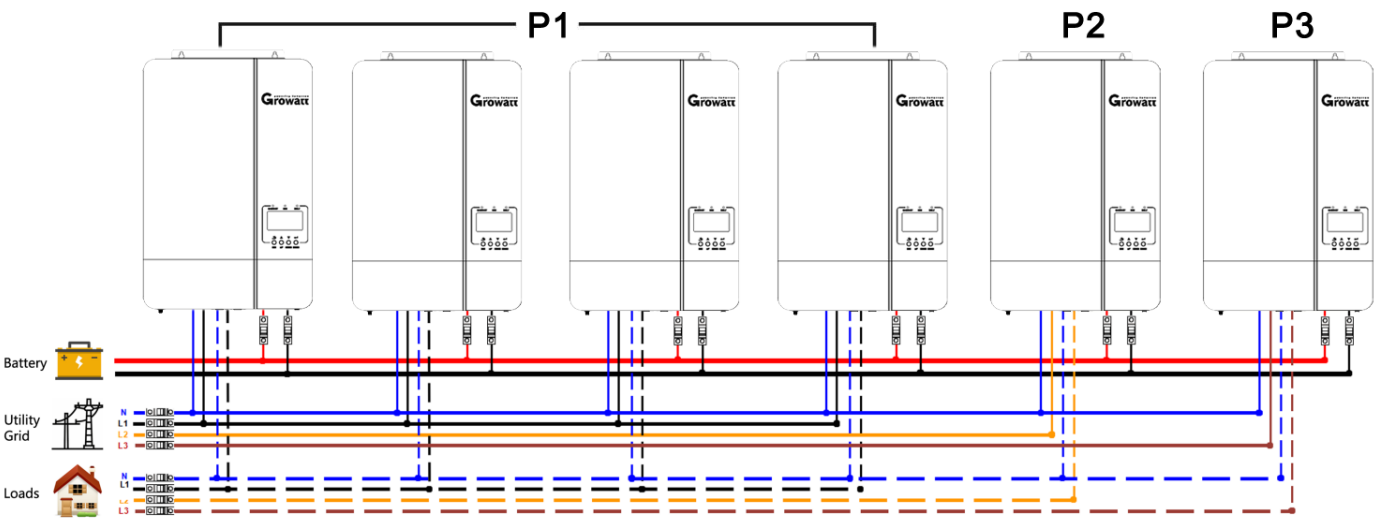

Communication Connection

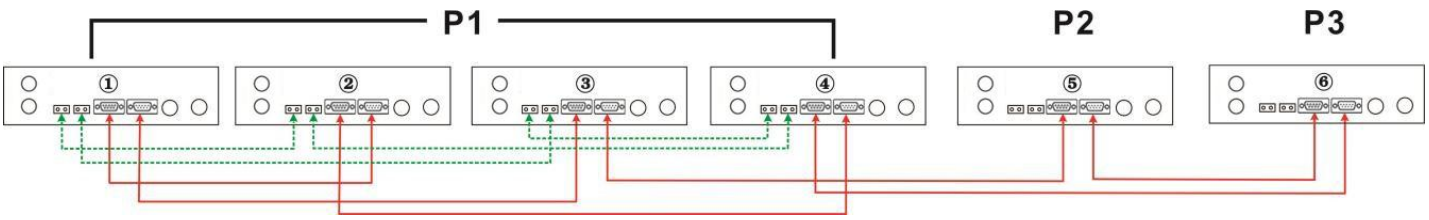

WARNING: Do not connect the current sharing cable between the inverters which are in different phases. Otherwise, it may damage the inverters.

PV Connection

Please refer to user manual of single unit for PV Connection on Page 10.

CAUTION: Each inverter should connect to PV modules separate.

LCD Setting and Display

Refer to Program 23 on Page 19

Parallel in Single Phase

Step 1: Check the following requirements before commissioning:

- Correct wire connection
- Ensure all breakers in Line wires of load side are open and each Neutral wires of each unit are connected together.

Step 2: Turn on each unit and set "PAL" in LCD setting program 23 of each unit. And then shut down all units.
Note: It's necessary to turn off switch when setting LCD program. Otherwise, the setting can not be programmed.
Step 3: Turn on each unit.

LCD display in Master unit	LCD display in Slave unit
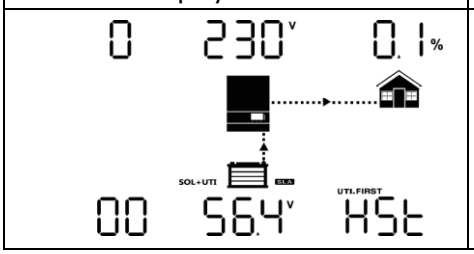	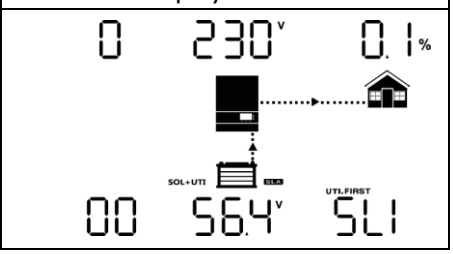

Note: Master and slave units are randomly defined.

Step 4: Switch on all AC breakers of Line wires in AC input. It's better to have all inverters connect to utility at the same time. If not, it will display warning 15.

LCD display in Master unit	LCD display in Slave unit
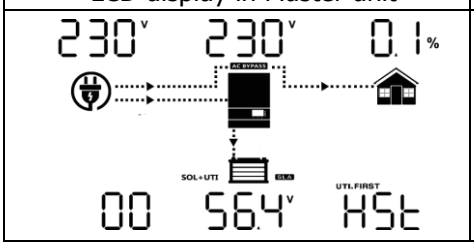	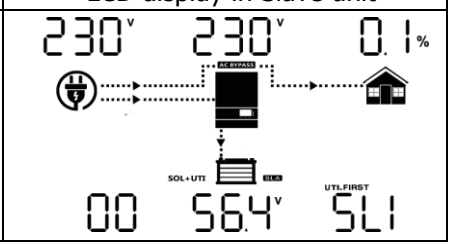

Step 5: If there is no more fault alarm, the parallel system is completely installed.
Step 6: Please switch on all breakers of Line wires in load side. This system will start to provide power to the load.

Parallel in Three Phase

Step 1: Check the following requirements before commissioning:

- Correct wire connection
- Ensure all breakers in Line wires of load side are open and each Neutral wires of each unit are connected together.

Step 2: Turn on all units and configure LCD program 23 as P1, P2 and P3 sequentially. Then shut down all units.
Note: It's necessary to turn off switch when setting LCD program. Otherwise, the setting can not be programmed.
Step 3: Turn on all units sequentially. Please turn on HOST inverter first, then turn on the rest one by one.

LCD display in L1-phase unit	LCD display in L2-phase unit	LCD display in L3-phase unit
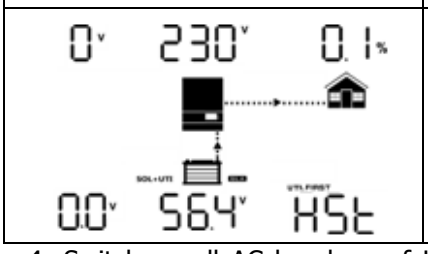	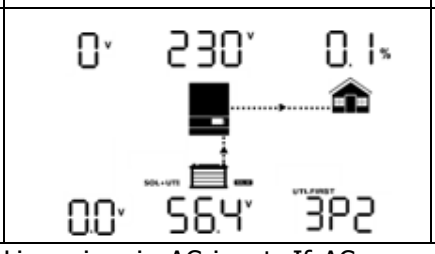	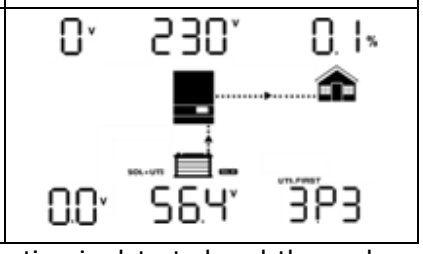

Step 4: Switch on all AC breakers of Line wires in AC input. If AC connection is detected and three phases are matched with unit setting, they will work normally. Otherwise, they will display warning 15/16 and will not work in the line mode.

LCD display in L1-phase unit	LCD display in L2-phase unit	LCD display in L3-phase unit
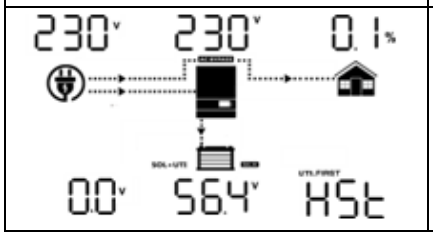	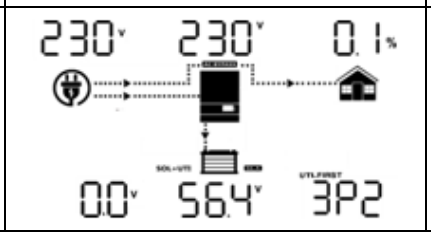	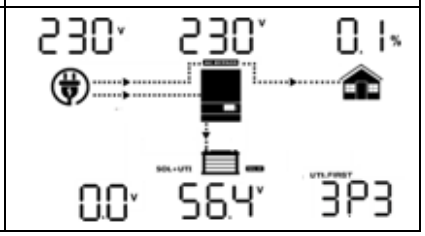

Step 5: If there is no more fault alarm, the system to support 3-phase equipment is completely installed.
Step 6: Please switch on all breakers of Line wires in load side. This system will start to provide power to the load.

Note 1: If there's only one inverter in L1-phase, the LCD will show as "HST". If there is more than one inverter in L1-phase, the LCD of the HOST inverter will show as "HST", the rest of L1-phase inverters will show as "3P1".
Note 2: To avoid overload occurring, before turning on breakers in load side, it's better to have whole system in operation first.
Note 3: Transfer time for this operation exists. Power interruption may happen to critical devices, which cannot bear transfer time.

Fault Reference Code

Fault Code	Fault Event	Icon on
01	Fan is locked	01
02	Over temperature	02
03	Battery voltage is too high	03
04	Battery voltage is too low	04
05	Output short circuited	05
06	Output voltage is too high.	06
07	Overload time out	07
08	Bus voltage is too high	08
09	Bus soft start failed	09
51	Over current or surge	51
52	Bus voltage is too low	52
53	Inverter soft start failed	53
55	Over DC voltage in AC output	55
56	Battery connection is open	56
57	Current sensor failed	57
58	Output voltage is too low	58
60	Negative power fault	60
61	PV voltage is too high	61
62	Internal communication error	62
80	CAN fault	80
81	Host loss	81

Warning Indicator

Warning Code	Warning Event	Audible Alarm	Icon flashing
01	Fan is locked when inverter is on.	Beep 3 times every second	01
02	Over temperature	Beep once every second	02
03	Battery is over-charged	Beep once every second	03
04	Low battery	Beep once every second	04
07	Overload	Beep once every 0.5 second	07
10	Output power derating	Beep twice every 3 seconds	10
12	Solar charger stops due to low battery	Beep once every second	12
13	Solar charger stops due to high PV voltage	Beep once every second	13
14	Solar charger stops due to overload	Beep once every second	14
15	Parallel input utility grid different	Beep once every second	15
16	Parallel input phase error	Beep once every second	16
17	Parallel output phase loss	Beep once every second	17
18	Buck over current	Beep once every second	18
19	Battery disconnect	No beep	19
20	BMS communication error	Beep once every second	20
21	PV power insufficient	Beep once every second	21
22	Parallel forbidden without battery	Beep once every second	22
25	Parallel inverters' capacity different	Beep once every second	25
33	BMS communication loss	Beep once every second	33
34	Cell over voltage	Beep once every second	34
35	Cell under voltage	Beep once every second	35
36	Total over voltage	Beep once every second	36
37	Total under voltage	Beep once every second	37
38	Discharge over voltage	Beep once every second	38
39	Charge over voltage	Beep once every second	39
40	Discharge over temperature	Beep once every second	40
41	Charge over temperature	Beep once every second	41
42	Mosfet over temperature	Beep once every second	42
43	Battery over temperature	Beep once every second	43
44	Battery under temperature	Beep once every second	44
45	System shut down	Beep once every second	45

Battery Equalization

Equalization function is added into charge controller. It reverses the buildup of negative chemical effects like stratification, a condition where acid concentration is greater at the bottom of the battery than at the top. Equalizationalso helps to remove sulfate crystals that might have built up on the plates. If left unchecked, this condition, called sulfation, will reduce the overall capacity of the battery. Therefore, it's recommended to equalize battery periodically.

- **How to Apply Equalization Function**

  You must enable battery equalization function in monitoring LCD setting program 43 first. Then, you may apply this function in device by either one of following methods:

  1. Setting equalization interval in program 47.
  2. Active equalization immediately in program 48.

- **When to Equalize**

  In float stage, when the setting equalization interval (battery equalization cycle) is arrived, or equalization is active immediately, the controller will start to enter Equalize stage.

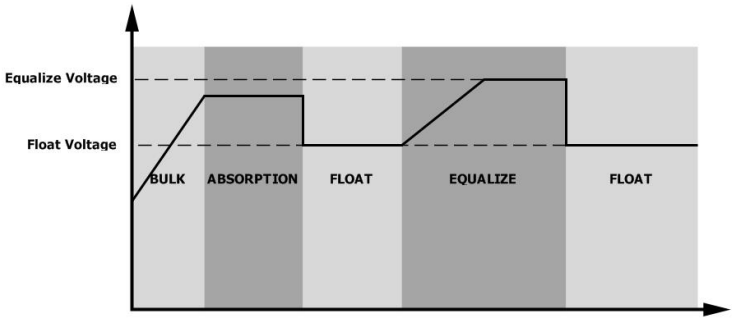

- **Equalize charging time and timeout**

  In Equalize stage, the controller will supply power to charge battery as much as possible until battery voltage raises to battery equalization voltage. Then, constant-voltage regulation is applied to maintain battery voltage at the battery equalization voltage. The battery will remain in the Equalize stage until setting battery equalized time is arrived.

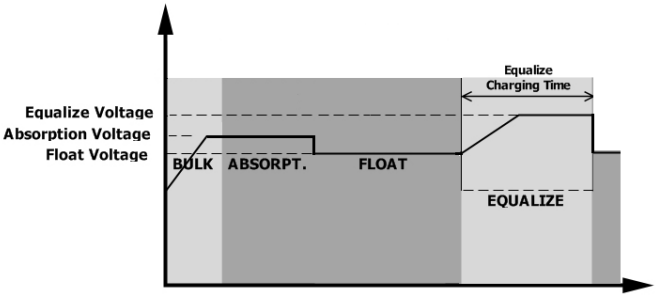

However, in Equalize stage, when battery equalized time is expired and battery voltage doesn't rise to battery equalization voltage point, the charge controller will extend the battery equalized time until battery voltage achieves battery equalization voltage. If battery voltage is still lower than battery equalization voltage when battery equalized timeout setting is over, the charge controller will stop equalization and return to float stage.

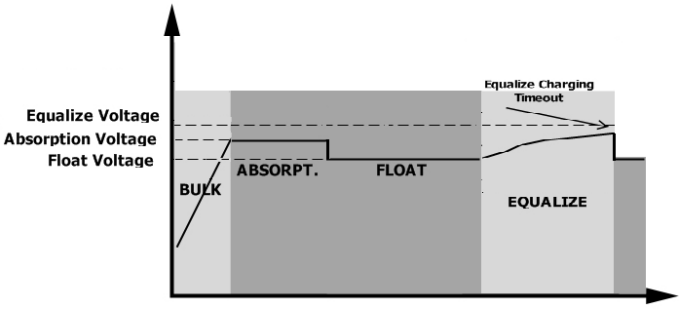

Specifications

Table 1 Line Mode Specifications

INVERTER MODEL	SPF 3500 ES	SPF 5000 ES
Input Voltage Waveform	Sinusoidal (utility or generator)	
Nominal Input Voltage	230Vac	
Low Loss Voltage	170Vac±7V (UPS); 90Vac±7V (Appliances)	
Low Loss Return Voltage	180Vac±7V (UPS); 100Vac±7V (Appliances)	
High Loss Voltage	280Vac±7V	
High Loss Return Voltage	270Vac±7V	
Max AC Input Voltage	300Vac	
Nominal Input Frequency	50Hz / 60Hz (Auto detection)	
Low Loss Frequency	40±1Hz	
Low Loss Return Frequency	42±1Hz	
High Loss Frequency	65±1Hz	
High Loss Return Frequency	63±1Hz	
Output Short Circuit Protection	Circuit Breaker	
Efficiency (Line Mode)	>95% (Rated R load, battery full charged)	
Transfer Time	10ms typical, 20ms Max@ Single <30ms @ Parallel	
Output power derating: When AC input voltage drops to 170V, the output power will be derated.	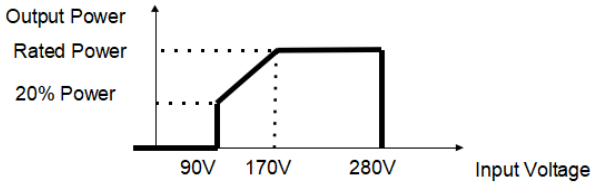	

Table 2 Inverter Mode Specifications

INVERTER MODEL	SPF 3500 ES	SPF 5000 ES
Rated Output Power	3.5KVA/3.5KW	5KVA/5KW
Output Voltage Waveform	Pure Sine Wave	
Output Voltage Regulation	230Vac±5%	
Output Frequency	50Hz	
Peak Efficiency	93%	
Overload Protection	5s@≥150% load; 10s@110%~150% load	
Surge Capacity	2* rated power for 5 seconds	
Nominal DC Input Voltage	48Vdc	
Cold Start Voltage(Lead-Acid Mode)	46.0Vdc	
Cold Start SOC(Li Mode)	Default 30%, Low DC Cut-off SOC +10%	
Low DC Warning Voltage (Lead-Acid Mode)	44.0Vdc @ load < 20% 42.8Vdc @ 20% ≤ load < 50% 40.4Vdc @ load ≥ 50%	
Low DC Warning Return Voltage (Lead-Acid Mode)	46.0Vdc @ load < 20% 44.8Vdc @ 20% ≤ load < 50% 42.4Vdc @ load ≥ 50%	
Low DC Cut-off Voltage (Lead-Acid Mode)	42.0Vdc @ load < 20% 40.8Vdc @ 20% ≤ load < 50% 38.4Vdc @ load ≥ 50%	
Low DC Cut-off Voltage (Li Mode)	42.0Vdc	
Low DC Warning SOC (Li Mode)	Low DC Cut-off SOC +5%	
Low DC Warning Return SOC (Li Mode)	Low DC Cut-off SOC +10%	
Low DC Cut-off SOC(Li Mode)	Default 20%, 5%~30% settable	
High DC Recovery Voltage	56.4Vdc(C.V. charging voltage)	
High DC Cut-off Voltage	60.8Vdc	
No Load Power Consumption	<60W	

Table 3 Charge Mode Specifications

Utility Charging Mode			
INVERTER MODEL		**SPF 3500 ES**	**SPF 5000 ES**
Charging Algorithm		3-Step	
Max. AC Charging Current		60Amp(@$V_{I/P}$=230Vac)	80Amp(@$V_{I/P}$=230Vac)
Bulk Charging Voltage	**Flooded Battery**	58.4Vdc	
	AGM / Gel Battery	56.4Vdc	
Floating Charging Voltage		54Vdc	
Charging Curve		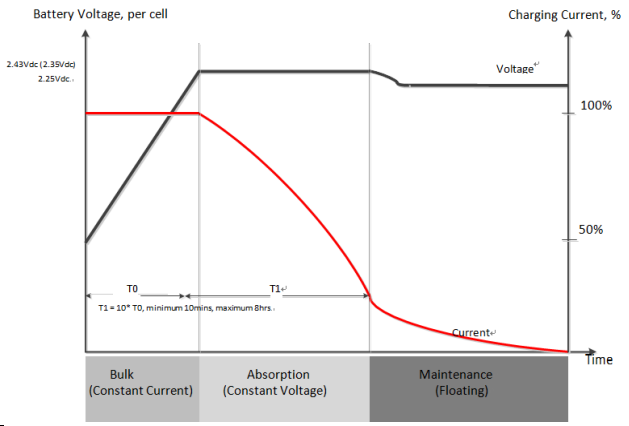	
MPPT Solar Charging Mode			
Max. PV Array Power		4500W	6000W
Max. PV Input Current		18A	
Start-up Voltage		150Vdc±10Vdc	
PV Array MPPT Voltage Range		120Vdc~430Vdc	
Max. PV Array Open Circuit Voltage		450Vdc	
Max. PV Charging Current		80A	100A
Max. Charging Current (AC Charger Plus Solar Charger)		80A	100A

Table 4 General Specifications

INVERTER MODEL	**SPF 3500 ES**	**SPF 5000 ES**
Safety Certification	CE	
Operating Temperature Range	0℃ to 55℃	
Storage temperature	-15℃~ 60℃	
Humidity	5% to 95% Relative Humidity (Non-condensing)	
Altitude	<2000m	
Dimension(D*W*H), mm	485 x 330 x 135	
Net Weight, kg	11.5	12

Trouble Shooting

Problem	LCD/LED/Buzzer	Explanation	What to do
Unit shuts down Automatically during startup process.	LCD/LEDs and buzzer will be active for 3 seconds and then complete off.	The battery voltage is too low . (<1.91V/Cell)	1. Re-charge battery. 2. Replace battery.
No response after power on.	No indication.	1.The battery voltage is far too low. (<1.4V/Cell) 2.Battery polarity is connected reversed.	1. Check if batteries and the wiring are connected well. 2. Re-charge battery. 3. Replace battery.
Mains exist but the unit works in battery mode.	Input voltage is 0 on the LCD and green LED is flashing.	Input protector is tripped.	Check if AC breaker is tripped and AC wiring is connected well.
	Green LED is flashing.	Insufficient quality of AC power (Shore or Generator)	1.Check if AC wires are too thin and/or too long. 2.Check if generator (if applied) is working well or if input voltage range setting is correct. (UPS→Appliance)
	Green LED is flashing.	Set "Battery First" or "Solar First" as the priority of output source.	Change output source priority to Utility first.
When it's turned on, internal relay is switching on and off repeatedly.	LCD display and LEDs are flashing	Battery is disconnected.	Check if battery wires are connected well.
Buzzer beeps continuously and red LED is on. (Fault code) Buzzer beeps once every second, and red LED is flashing. (Warning code)	Fault code 01	Fan fault.	1.Check whether all fans are working properly. 2.Replace the fan.
	Fault code 02	Internal temperature of component is over 100℃.	1. Check whether the air flow of the unit is blocked or whether the ambient temperature is too high. 2. Check whether the thermistor plug is loose.
	Fault code 03	Battery is over-charged.	Restart the unit, if the error happens again, please return to repair center.
		The battery voltage is too high.	Check if spec and quantity of batteries are meet requirements.
	Warning code 04	The battery voltage/SOC is too low.	1. Measure battery voltage in DC input. 2. Check battery SOC in LCD when use Li battery 3. Recharge the battery.
	Fault code 05	Output short circuited.	Check if wiring is connected well and remove abnormal load.
	Fault code 06/58	Output abnormal (Inverter voltage below than 190Vac or is higher than 260Vac).	1. Reduce the connected load. 2. Restart the unit, if the error happens again, please return to repair center.
	Fault code 07	The inverter is overload 110% and time is up.	Reduce the connected load by switching off some equipment.

Buzzer beeps continuously and red LED is on. (Fault code) Buzzer beeps once every second, and red LED is flashing. (Warning code)	Fault code 08	Bus voltage is too high.	1. If you connect to a lithum battery without communication, check whether the voltage points of the program 19 and 21 are too high for the lithum battery. 2. Restart the unit, if the error happens again, please return to repair center.
	Fault code 09/53/57	Internal components failed.	Restart the unit, if the error happens again, please return to repair center.
	Warning code 15	The input status is different in parallel system.	Check if AC input wires of all inverters are connected well.
	Warning code 16	Input phase is not correct.	Change the input phase S and T wiring.
	Warning code 17	The output phase not correct in parallel.	1.Make sure the parallel setting are the same system(sigle or paralle; 3P1,3P2,3P3). 2.Make sure all phases inverters are power on.
	Warning code 20	Li battery can't communicate to the inverter.	1. Check whether communication line is correct connection between inverter and battery. 2. Check whether BMS protocol type is correct setting.
	Fault code 51	Over current or surge.	Restart the unit, if the error happens again, please return to repair center.
	Fault code 52	Bus voltage is too low.	
	Fault code 55	Output voltage is unbalanced	
	Fault code 56	Battery is not connected well or fuse is burnt.	1. If you connect to a lithum battery without communication, check whether the voltage points of the program 19 and 21 are too high for the lithum battery. 2. If the battery is connected well, restart the unit. If the error happens again, please return to repair center.
	Fault code 60	Negative power fault	1. Check whether the AC output connected to the grid input. 2. Check whether Program 8 settings are the same for all parallel inverters 3. Check whether the current sharing cables are connected well in the same parallel phases. 4. Check whether all neutral wires of all parallel units are connected together. 5. If problem still exists, contact repair center.
	Fault code 80	CAN fault	1. Check whether the parallel communication cables are connected well. 2. Check whether Program 23 settings are right for the parallel system. 3. If problem still exists, contact repair center
	Fault code 81	Host loss	

Note: To restart the inverter, all power sources need to be disconnected. After the LCD screen light is off, only use the battery to boot.